DEFINITIVE SITE PLAN SUBMISSION SET FOR

MULTI-FAMILY DEVELOPMENT

JEFFERSON AT BEAVER BROOK

BOXBOROUGH, MA

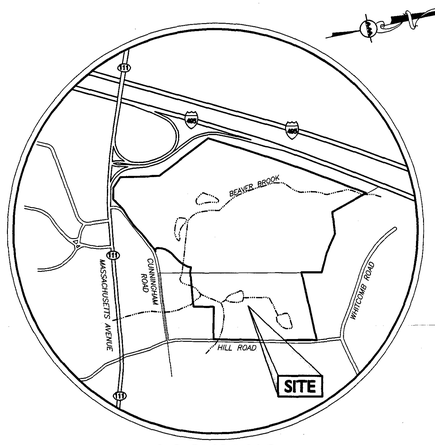

LOCUS MAP
NOT TO SCALE

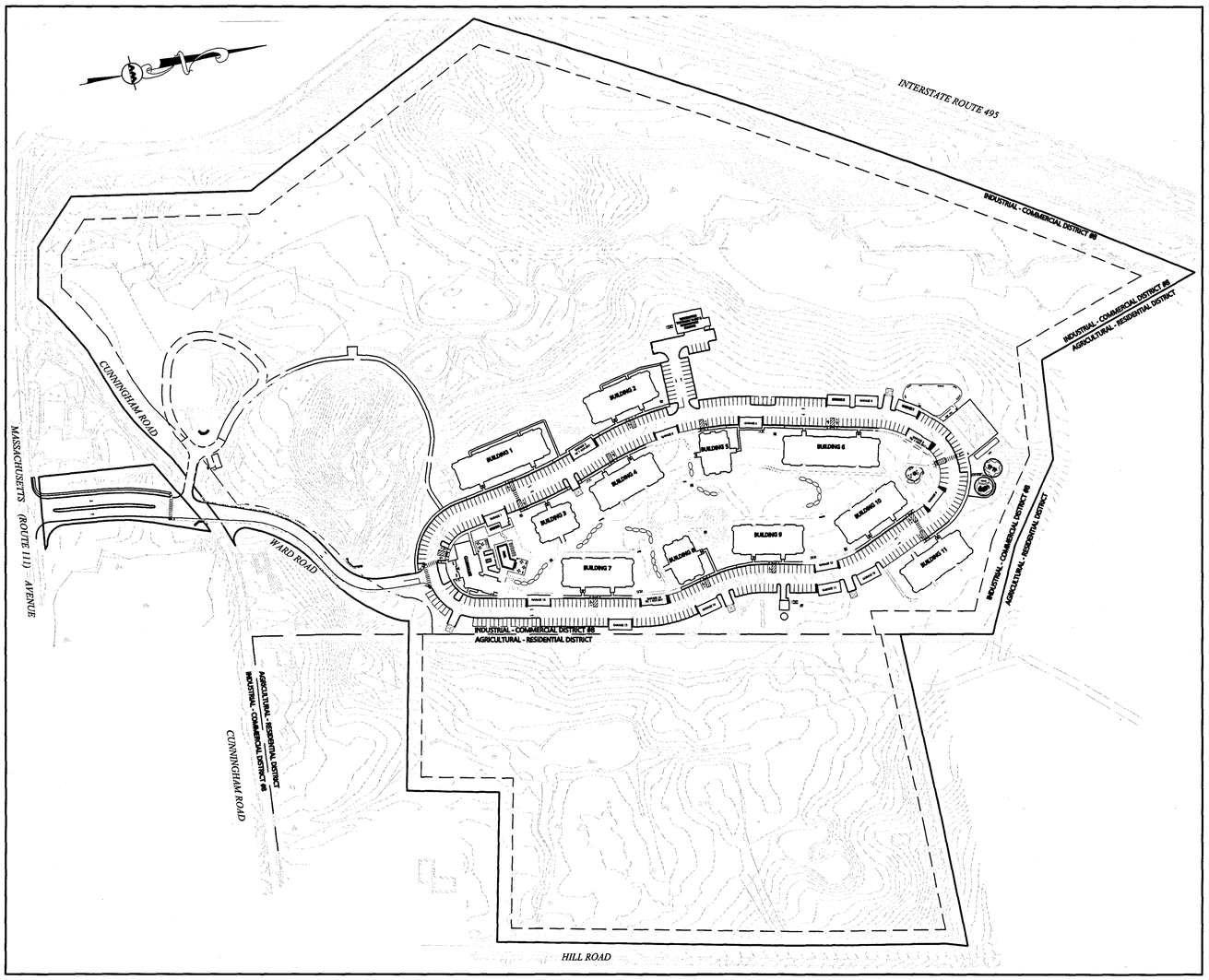

APPLICANT:
JPI
3 WEST MAIN STREET, SUITE 203
IRVINGTON, NY 10533

OWNER:
NEW BLUE HILLS SAUGUS REALTY TRUST
ONE WALL STREET
BURLINGTON, MA 01803

SITE ENGINEER & LANDSCAPE ARCHITECT:
ALLEN & MAJOR ASSOCIATES, INC.
100 COMMERCE WAY
WOBURN, MA 01888-0118

ENVIRONMENTAL CONSULTANT & LAND SURVEYOR:
VANASSE HANGEN BRUSTLIN, INC
101 WALNUT STREET
P.O. BOX 9151
WATERTOWN, MASSACHUSETTS 02471

ARCHITECT:
SHESKEY ARCHITECTS, INC.
14 FRANKLIN STREET
QUINCY, MA 02169

TOWN OF BOXBOROUGH, MA
ZONING BOARD OF APPEALS APPROVAL

DEFINITIVE SITE PLAN SET APPROVAL

_____
_____
_____
_____
_____
_____
_____
_____

SIGNATURE *DATE*

APPLICANT:

JPI

PREPARED BY:

ALLEN & MAJOR ASSOCIATES, INC.
civil & structural engineering ◆ land surveying
environmental consulting ◆ landscape architecture
www.allenmajor.com
100 COMMERCE WAY
P.O. BOX 2118
WOBURN MA 01888-0118
TEL: (781) 935-6889
FAX: (781) 935-2896
WOBURN, MA ◆ LAKEVILLE, MA ◆ MANCHESTER, NH

Copyright©2015 Allen & Major Associates, Inc.
All Rights Reserved

GRAPHIC SCALE
120 0 60 120 240 480
(IN FEET)
1 inch = 120 ft.

LIST OF DRAWINGS

DRAWING TITLE	SHEET NO.	ISSUED	REVISED
ABBREVIATIONS & NOTES	ABB-1	02-11-15	07-08-15
ABBREVIATIONS & NOTES	ABB-2	07-08-15	07-08-15
PERMIT CONDITIONS	ABB-3	05-15-15	07-08-15
PERMIT CONDITIONS	ABB-4	05-15-15	07-08-15
EXISTING CONDITIONS PLAN	Sv-1	02-04-15	---
LAYOUT & MATERIALS PLAN	C-1A	02-11-15	07-08-15
LAYOUT & MATERIALS PLAN	C-1B	02-11-15	07-08-15
LAYOUT & MATERIALS PLAN	C-1C	02-11-15	07-08-15
GRADING & DRAINAGE PLAN	C-2A	05-15-15	07-08-15
GRADING & DRAINAGE PLAN	C-2B	02-11-15	07-08-15
GRADING & DRAINAGE PLAN	C-2C	02-11-15	07-08-15
SPOT GRADE PLAN	C-3A	05-15-15	07-08-15
SPOT GRADE PLAN	C-3B	05-15-15	07-08-15
SPOT GRADE PLAN	C-3C	05-15-15	07-08-15
SPOT GRADE PLAN	C-3D	05-15-15	07-08-15
SPOT GRADE PLAN	C-3E	07-08-15	07-08-15
UTILITY PLAN	C-4A	02-11-15	07-08-15
UTILITY PLAN	C-4B	02-11-15	07-08-15
UTILITY PLAN	C-4C	02-11-15	07-08-15
EROSION CONTROL PLAN	C-5A	02-11-15	07-08-15
EROSION CONTROL PLAN	C-5B	02-11-15	07-08-15
EROSION CONTROL PLAN	C-5C	02-11-15	07-08-15
ELECTRIC PLAN	C-6A	02-11-15	07-08-15
ELECTRIC PLAN	C-6B	02-11-15	07-08-15
ELECTRIC PLAN	C-6C	02-11-15	07-08-15
SITE LIGHTING PLAN	C-7A	02-11-15	07-08-15
SITE LIGHTING PLAN	C-7B	02-11-15	07-08-15
SITE LIGHTING PLAN	C-7C	02-11-15	07-08-15
LANDSCAPE & SNOW STORAGE PLAN	C-8A	02-11-15	07-08-15
LANDSCAPING PLAN	C-8B	02-11-15	07-08-15
LANDSCAPING PLAN	C-8C	02-11-15	07-08-15
LANDSCAPING PLAN	C-8D	02-11-15	07-08-15
SITE AMENITIES PLAN	C-9	02-11-15	07-08-15
FIRE TRUCK TURNING PLAN	FP-1	02-11-15	07-08-15
FIRE POND PLAN	FP-2	02-11-15	07-08-15
DETAILS	D-1 - D-11	02-11-15	07-08-15

COMMONWEALTH OF MASSACHUSETTS
TIMOTHY J. WILLIAMS
CIVIL
No. 43119
REGISTERED PROFESSIONAL ENGINEER
7/8/15

PROFESSIONAL ENGINEER FOR
ALLEN & MAJOR ASSOCIATES, INC.

ISSUED FOR CONSERVATION COMMISSION: FEBRUARY 11, 2015
ISSUED FOR ZONING BOARD OF APPEALS: FEBRUARY 12, 2015
REVISED PER TOWN COMMENTS: FEBRUARY 27, 2015
ISSUED FOR MEPA: MARCH 2, 2015
ISSUED PER TOWN COMMENTS: MARCH 26, 2015
REVISED FOR PRICING: MAY 4, 2015
ISSUED FOR DEP PERMIT APPROVAL: MAY 5, 2015
ISSUED FOR PERMIT: MAY 15, 2015
REVISED PER FIRE DEPARTMENT COMMENTS: JUNE 12, 2015
ISSUED FOR DEFINITIVE SITE PLAN: JULY 8, 2015

N:\PROJECTS\2075-01\CIVIL\DRAWINGS\CURRENT\2075-01 - COVER.DWG

GENERAL NOTES

SITE NOTES

1. ALL WORK AND MATERIALS SHALL COMPLY WITH ALL TOWN OF BOXBOROUGH REGULATIONS AND CODES AND O.S.H.A. STANDARDS. ALL CONSTRUCTION SHALL CONFORM TO THE "RULES AND REGULATIONS GOVERNING THE SUBDIVISION OF LAND" OF THE TOWN OF BOXBOROUGH PLANNING BOARD, AND THE TOWN OF BOXBOROUGH ENGINEERING DEPARTMENT SPECIFICATIONS.

2. THE CONTRACTOR IS SPECIFICALLY CAUTIONED THAT THE LOCATION AND/OR ELEVATION OF EXISTING UTILITIES AND STRUCTURES AS SHOWN ON THESE PLANS IS BASED ON RECORDS OF VARIOUS UTILITY COMPANIES AND WHERE POSSIBLE, MEASUREMENTS TAKEN IN THE FIELD. THIS INFORMATION IS NOT TO BE RELIED ON AS BEING EXACT OR COMPLETE. THE LOCATION OF ALL UNDERGROUND UTILITIES AND STRUCTURES SHALL BE VERIFIED IN THE FIELD BY THE CONTRACTOR PRIOR TO THE START OF CONSTRUCTION. THE CONTRACTOR MUST CONTACT THE APPROPRIATE UTILITY COMPANY, ANY GOVERNING PERMITTING AUTHORITY, AND "DIGSAFE" AT LEAST 72 HOURS PRIOR TO ANY EXCAVATION WORK TO REQUEST EXACT FIELD LOCATION OF UTILITIES, THE ENGINEER AND THE TOWN OF BOXBOROUGH ENGINEERING DEPARTMENT SHALL BE NOTIFIED IN WRITING OF ANY UTILITIES INTERFERING WITH THE PROPOSED CONSTRUCTION AND APPROPRIATE REMEDIAL ACTION TAKEN BEFORE PROCEEDING WITH THE WORK.

3. THE CONTRACTOR SHALL BE RESPONSIBLE FOR ESTABLISHING AND MAINTAINING ALL CONTROL POINTS AND BENCH MARKS NECESSARY FOR THE WORK.

4. THE CONTRACTOR IS RESPONSIBLE FOR OBTAINING AND PAYING FOR ANY PERMITS AND/OR CONNECTION FEES REQUIRED TO CARRY OUT THE WORK INCLUDING BUT NOT LIMITED TO DEMOLITION.

5. DISPOSAL OF ALL DEMOLISHED MATERIALS IS THE RESPONSIBILITY OF THE CONTRACTOR AND MUST BE DISPOSED OF OFF-SITE IN ACCORDANCE WITH ALL FEDERAL, STATE, AND LOCAL MUNICIPAL REQUIREMENTS.

6. IT SHALL BE THE RESPONSIBILITY OF THE CONTRACTOR TO RELOCATE ALL EXISTING UTILITIES WHICH CONFLICT WITH THE PROPOSED IMPROVEMENTS SHOWN ON THE PLAN. THE CONTRACTOR SHALL PROTECT AND/OR CAP OFF ALL EXISTING ON-SITE UTILITY SERVICES DESIGNATED ON THESE DRAWINGS. SERVICES SHALL BE CAPPED OFF WHERE SAME ENTER THE PERIMETER OF THE PROPERTY LINE.

7. THE AREA OR AREAS OF ENTRANCE AND EXIT TO AND FROM THE SITE SHALL BE CLEARED OF ALL VEGETATION, ROOTS AND OTHER OBJECTIONABLE MATERIAL AS DETERMINED BY THE ENGINEER OR OWNER'S REPRESENTATIVE.

8. ALL DISTURBED AREAS ARE TO RECEIVE SIX INCHES (6") MINIMUM OF TOPSOIL, SEED, MULCH AND WATER UNTIL A HEALTHY STAND OF GRASS IS ESTABLISHED.

9. ALL DIMENSIONS AND RADII ARE TO THE FACE OF CURB UNLESS OTHERWISE NOTED.

10. EXISTING STRUCTURES WITHIN CONSTRUCTION LIMITS ARE TO BE ABANDONED, REMOVED OR RELOCATED AS NECESSARY.

11. CONTRACTOR SHALL BE RESPONSIBLE FOR ALL RELOCATIONS, INCLUDING BUT NOT LIMITED TO, ALL UTILITIES, STORM DRAINAGE, SIGNS, TRAFFIC SIGNALS & POLES, ETC. AS REQUIRED. ALL WORK SHALL BE IN ACCORDANCE WITH THE TOWN OF BOXBOROUGH'S GOVERNING AUTHORITY'S SPECIFICATIONS AND SHALL BE APPROVED BY SUCH.

12. THE CONTRACTOR SHALL COORDINATE WITH ALL UTILITY COMPANIES TO DETERMINE EXACT POINT OF SERVICE CONNECTION AT EXISTING UTILITY.

13. ALL ELEVATIONS SHOWN ARE IN REFERENCE TO THE BENCHMARK AND MUST BE VERIFIED BY THE GENERAL CONTRACTOR AT GROUNDBREAK.

14. FINISH WALK AND CURB ELEVATIONS VARY FROM FLUSH TO A MAXIMUM OF 6" ABOVE FINISH GRADE.

15. PROPOSED GAS SERVICE LOCATIONS ARE APPROXIMATE ONLY. THE CONTRACTOR SHALL CONFIRM WITH THE GAS COMPANY THAT GAS LINE INSTALLATION SHALL BE BY THE LOCAL GAS COMPANY. THE CONTRACTOR SHALL GIVE THE GAS COMPANY ADVANCE NOTICE OF WHEN THE GAS LINE CAN BE INSTALLED.

16. PROPOSED ELECTRIC AND COMMUNICATIONS (TELEPHONE AND CABLE) SYSTEMS LOCATIONS ARE APPROXIMATE ONLY AND SHALL BE COORDINATED AND SCHEDULED WITH THE APPROPRIATE UTILITY COMPANY SERVICING THE PROJECT SITE.

17. CONTRACTOR IS RESPONSIBLE FOR DIGGING TEST HOLES AND VERIFYING ANY EXISTING UTILITY OR STRUCTURE PRIOR TO CONSTRUCTION. CONTRACTOR SHALL VERIFY THAT BASED ON EXACT LOCATION OF EXISTING UTILITIES, THERE ARE NO CONFLICTS BETWEEN THEM AND THE PROPOSED UTILITIES.

UTILITY NOTES

1. ALL FILL MATERIAL IS TO BE IN PLACE, AND COMPACTED BEFORE INSTALLATION OF PROPOSED UTILITIES.

2. CONTRACTOR SHALL NOTIFY THE UTILITY AUTHORITY'S INSPECTORS 72 HOURS BEFORE CONNECTING TO ANY EXISTING LINE.

3. SANITARY SEWER PIPE SHALL BE POLYVINYL CHLORIDE PIPE SDR35 AND SHALL CONFORM TO ASTM D 3034.

4. MINIMUM TRENCH WIDTH SHALL BE 2 FEET.

5. ALL WATER JOINTS ARE TO BE MECHANICAL JOINTS WITH THRUST BLOCKING.

6. CONTRACTOR SHALL MAINTAIN A MINIMUM OF 5'-0" COVER ON ALL WATERLINES.

7. IN THE EVENT OF A VERTICAL CONFLICT BETWEEN WATERLINES, SANITARY LINES, STORM LINES AND GAS LINES (EXISTING AND PROPOSED), THE SANITARY LINE SHALL BE DUCTILE IRON PIPE WITH MECHANICAL JOINTS AT LEAST 10 FEET ON BOTH SIDES OF CROSSING. THE WATERLINE SHALL HAVE MECHANICAL JOINTS WITH APPROPRIATE THRUST BLOCKING AS REQUIRED TO PROVIDE A MINIMUM OF 18" CLEARANCE BETWEEN THE PIPES. WHERE THE WATERLINE IS LESS THE 18" VERTICAL CLEARANCE AND MEETING 10' HORIZONTAL CLEARANCE CANNOT BE MET, THE WATER MUST BE ENCASED IN CONCRETE TO MEET THE REQUIREMENTS OF ANSI A21.10 OR ANSI 21.11 (AWWA C-151) (CLASS 50).

8. ALL UNDERGROUND UTILITIES SHALL BE INSPECTED AND APPROVED BY THE TOWN OF BOXBOROUGH ENGINEERING DEPARTMENT, DPW, OR BUILDING DEPARTMENT, AS APPROPRIATE, PRIOR TO BACKFILLING.

9. TOPS OF EXISTING MANHOLES SHALL BE RAISED AS NECESSARY TO BE FLUSH WITH PROPOSED PAVEMENT ELEVATIONS, AND MANHOLES NOT IN PAVEMENT TO BE FOUR INCHES (4") ABOVE FINISHED GROUND ELEVATIONS WITH WATER TIGHT LIDS.

10. ALL CONCRETE FOR ENCASEMENTS SHALL HAVE A MINIMUM 28 DAY COMPRESSION STRENGTH OF 3000 P.S.I.

11. DRAWINGS DO NOT NECESSARILY SHOW ALL EXISTING UTILITIES.

12. EXISTING UTILITIES SHALL BE VERIFIED IN FIELD PRIOR TO INSTALLATION OF ANY NEW LINES.

13. CONTRACTOR IS RESPONSIBLE FOR COMPLYING WITH THE SPECIFICATIONS OF THE LOCAL AUTHORITIES (AND TOWN) WITH REGARDS TO MATERIALS AND INSTALLATION OF THE WATER, SEWER, GAS AND ELECTRICAL AND TELECOMMUNICATIONS LINES.

14. THE CONTRACTOR IS SPECIFICALLY CAUTIONED THAT THE LOCATION AND/OR ELEVATION OF EXISTING UTILITIES AS SHOWN ON THESE PLANS IS BASED ON RECORDS OF THE VARIOUS UTILITY COMPANIES, AND WHERE POSSIBLE, MEASUREMENTS TAKEN IN THE FIELD. THE INFORMATION IS NOT TO BE RELIED ON AS BEING EXACT OR COMPLETE. THE CONTRACTOR MUST CALL THE APPROPRIATE UTILITY COMPANIES AT LEAST 72 HOURS BEFORE ANY EXCAVATION TO REQUEST EXACT FIELD LOCATION OF UTILITIES. IT SHALL BE THE RESPONSIBILITY OF THE CONTRACTOR TO RELOCATE ALL EXISTING UTILITIES WHICH CONFLICT WITH THE PROPOSED IMPROVEMENTS SHOWN ON THE PLANS.

15. ALL NECESSARY INSPECTIONS AND/OR CERTIFICATIONS REQUIRED BY CODES AND/OR UTILITY SERVICE COMPANIES SHALL BE PERFORMED PRIOR TO ANNOUNCED BUILDING POSSESSION AND THE FINAL CONNECTION OF SERVICE.

16. CONTRACTOR SHALL COORDINATE WITH ALL UTILITY COMPANIES FOR INSTALLATION REQUIREMENTS AND SPECIFICATIONS.

17. ALL HYDRANTS SHALL MEET LOCAL MUNICIPAL SPECIFICATION REQUIREMENTS AND SHALL BE INSTALLED IN ACCORDANCE WITH THE TOWN OF BOXBOROUGH REQUIREMENTS.

18. ALL WATER MAINS 3 INCHES AND LARGER SHALL BE CEMENT LINED DUCTILE IRON - CLASS 52, AND SHALL BE INSTALLED WITH APPROPRIATELY SIZED FITTINGS AND GATE VALVES.

19. DOMESTIC WATER SERVICES SHALL BE INSTALLED WITH APPROPRIATELY SIZED GATE, BOX, AND TEE FITTINGS.

20. ALL WATER MAIN APPURTENANCES, MATERIALS, METHODS OF INSTALLATION AND TESTING REQUIREMENTS SHALL MEET OR EXCEED THE TOWN OF BOXBOROUGH REQUIREMENTS

21. ALL WATER MAIN FITTINGS, VALVES AND TEES ETC. SHALL BE RESTRAINED WITH THRUST BLOCKS AS REQUIRED BY THE TOWN OF BOXBOROUGH. WHERE ADEQUATE RESTRAINT CANNOT BE OBTAINED WITH THRUST BLOCKS, USE OF RETAINER GLANDS IS REQUIRED. THE WATER LINE SHALL HAVE MECHANICAL JOINTS WITH APPROPRIATE THRUST BLOCKING AS REQUIRED TO PROVIDE A MINIMUM OF 18" CLEARANCE. MEETING REQUIREMENTS OF ANSI A21.10 OR ANSI 21.11 (AWWA C-151) (CLASS 50).

22. THE CONTRACTOR SHALL FIELD VERIFY/LOCATE EXISTING WATER MAINS AND SERVICES.

23. VALVES SHALL BE GATE VALVES AND SHALL BE RESILIENT SEAT, MODIFIED WEDGE DISK CONFORMING TO AWWA C-509, AND BE APPROVED BY THE MUNICIPALITY.

24. PRESSURE AND LEAKAGE TEST, DISINFECTION AND FLUSHING SHALL BE IN ACCORDANCE WITH ALL LOCAL AND MUNICIPAL STANDARDS AND REQUIREMENTS. CONTRACTOR SHALL BE RESPONSIBLE FOR ALL COSTS IN CONNECTION WITH THE UTILITY TESTS, FLUSHING AND INSPECTIONS AS REQUIRED BY THE LOCAL MUNICIPALITY.

25. SEWER PIPE BEDDING MATERIAL SHALL BE AS SPECIFIED ON THE DRAWINGS. IF LOCAL OR STATE AUTHORITIES REQUIRE DIFFERENT BEDDING OR BACKFILL MATERIAL, THEN THE MORE STRINGENT SHALL APPLY.

26. ALL RESTRAINING JOINTS ARE TO BE ACCOMPLISHED WITH "MEGA LUGS" OR APPROVED EQUAL.

27. FIRE PUMP HOUSE TO CONTAIN HAZARDOUS MATERIALS SPILL KIT.

GRADING AND DRAINAGE NOTES

1. CONTRACTOR IS RESPONSIBLE FOR DEMOLITION OF EXISTING STRUCTURES INCLUDING REMOVAL OF ANY EXISTING UTILITIES SERVING THE STRUCTURE.

2. THE CONTRACTOR IS SPECIFICALLY CAUTIONED THAT THE LOCATION AND/OR ELEVATION OF EXISTING UTILITIES AS SHOWN ON THESE PLANS IS BASED ON RECORDS OF THE VARIOUS UTILITY COMPANIES, AND WHERE POSSIBLE, MEASUREMENTS TAKEN IN THE FIELD. THE INFORMATION IS NOT TO BE RELIED ON AS BEING EXACT OR COMPLETE. THE CONTRACTOR MUST CALL THE APPROPRIATE UTILITY COMPANIES AT LEAST 72 HOURS BEFORE ANY EXCAVATION TO REQUEST EXACT FIELD LOCATION OF UTILITIES. IT SHALL BE THE RESPONSIBILITY OF THE CONTRACTOR TO RELOCATE ALL EXISTING UTILITIES WHICH CONFLICT WITH THE PROPOSED IMPROVEMENTS SHOWN ON THE PLANS.

3. ALL CUT OR FILL SLOPES SHALL BE 3:1 OR FLATTER UNLESS OTHERWISE NOTED.

4. PRE-CAST STRUCTURES MAY BE USED AT CONTRACTOR'S OPTION.

5. STORM PIPE SHALL BE HIGH DENSITY POLYETHYLENE (HDPE) WITH WATERTIGHT JOINTS (UNLESS OTHERWISE SPECIFIED).

6. EXISTING DRAINAGE STRUCTURES TO BE INSPECTED AND REPAIRED AS NEEDED. EXISTING PIPES AND STRUCTURES, INCLUDING BUT NOT LIMITED TO CATCH BASINS, MANHOLES, INFILTRATION SYSTEM, AND WATER QUALITY STRUCTURES TO BE CLEANED OUT TO REMOVE ALL SILT AND DEBRIS.

7. EXISTING GRADE CONTOUR INTERVALS SHOWN AT 2 FEET

8. PROPOSED GRADE CONTOUR INTERVALS SHOWN AT 1 FEET.

9. IF ANY EXISTING STRUCTURES TO REMAIN ARE DAMAGED DURING CONSTRUCTION IT SHALL BE THE CONTRACTOR'S RESPONSIBILITY TO REPAIR AND/OR REPLACE THE EXISTING STRUCTURE AS NECESSARY TO RETURN IT TO EXISTING CONDITIONS OR BETTER.

10. ALL STORM PIPE ENTERING STRUCTURES SHALL BE GROUTED TO ASSURE CONNECTION AT STRUCTURE IS WATERTIGHT.

11. ALL STORM SEWER MANHOLES IN PAVED AREAS SHALL BE SET 0.1' BELOW FINISH GRADE OF PAVEMENT AND SHALL HAVE TRAFFIC BEARING RING & COVERS. MANHOLES IN UNPAVED AREAS SHALL BE 6" ABOVE FINISH GRADE. LIDS SHALL BE LABELED "DRAIN".

12. THE CONTRACTOR SHALL ADHERE TO ALL TERMS & CONDITIONS AS OUTLINED IN THE GENERAL N.P.D.E.S. PERMIT FOR STORM WATER DISCHARGE ASSOCIATED WITH CONSTRUCTION ACTIVITIES.

13. CONTRACTOR SHALL ADJUST AND/OR CUT EXISTING PAVEMENT AS NECESSARY TO ASSURE A SMOOTH FIT AND CONTINUOUS GRADE.

14. CONTRACTOR SHALL ASSURE POSITIVE DRAINAGE AWAY FROM BUILDINGS FOR ALL NATURAL AND PAVED AREAS.

15. FOR EXISTING CONDITIONS SURVEY, SEE PLAN ENTITLED "EXISTING CONDITIONS PLAN OF LAND" AS PREPARED BY VANASSE HANGEN BRUSTLIN, INC. DATED FEBRUARY 4, 2015.

16. ALL UNSURFACED AREAS DISTURBED BY GRADING OPERATION SHALL RECEIVE SIX INCHES (6") OF TOPSOIL. CONTRACTOR SHALL APPLY STABILIZATION FABRIC TO ALL SLOPES 3H:1V OR STEEPER. CONTRACTOR SHALL GRASS DISTURBED AREAS IN ACCORDANCE WITH MUNICIPAL SPECIFICATIONS UNTIL A HEALTHY STAND OF GRASS IS OBTAINED.

17. ALL CATCH BASINS ON-SITE SHALL BE EQUIPPED WITH HOODS AND 4 FOOT SUMPS AND SHALL CONFORM TO LOCAL DRAINAGE REQUIREMENTS.

18. ALL DRAINAGE SHALL CONFORM TO LOCAL REQUIREMENTS.

ABBREVIATIONS

ABAN	ABANDON	L	LENGTH
ADJ	ADJUST	LB	LEACHING BASIN
		LP	LIGHT POLE
B	BORING		
BC	BOTTOM OF CURB	MAT	MATERIAL
BIT	BITUMINOUS	MAX	MAXIMUM
BCB	BITUMINOUS CONCRETE BERM	MH	MANHOLE
BLDG	BUILDING	MIN	MINIMUM
BM	BENCH MARK	MISC	MISCELLANEOUS
BOS	BOTTOM OF SLOPE	MTD	MOUNTED
BOW	BOTTOM OF WALL	MW	MONITORING WELL
BRK	BRICK		
BV&B	BUTTERFLY VALVE & BOX	N	NORTH
BVW	BORDERING VEGETATED WETLAND	NIC	NOT IN CONTRACT
		NO	NUMBER
CATV	CABLE TELEVISION	NTS	NOT TO SCALE
CB	CATCH BASIN	OC	ON CENTER
CF	CUBIC FEET	OD	OUTSIDE DIAMETER
CFS	CUBIC FEET PER SECOND	OHW	OVERHEAD WIRE
CI	CAST IRON (PIPE)	OVHD	OVERHEAD
CL	CENTERLINE	OW	OBSERVATION WELL
CLDI	CEMENT LINED DUCTILE IRON (PIPE)		
CM	CONSTRUCTION MANAGER	PC	POINT OF CURVATURE
CMP	CORRUGATED METAL PIPE	PCC	POINT OF COMPOUND CURVATURE
CO	CLEAN OUT	PI	POINT OF INTERSECTION
CONC	CONCRETE	PKG	PARKING
CONST	CONSTRUCTION	PL	PROPERTY LINE
CONT	CONTRACTOR	PLMB	PLUMBING
CRD	COORDINATE	POC	POINT ON CURVATURE
CPP	CORRUGATED POLYETHYLENE PIPE	POT	POINT ON TANGENT
CUL	CULVERT	PRC	POINT OF REVERSE CURVATURE
CY	CUBIC YARD	PROP, P	PROPOSED
		PT	POINT (OR POINT OF TANGENT)
DB	DISTRIBUTION BOX	PVC	POLYVINYL CHLORIDE (PIPE)
DBL	DOUBLE	R&R	REMOVE & RESET/REPLACE
DEM	DEMOLISH	R&S	REMOVE & STACK
DET	DETENTION	RCP	REINFORCED CONCRETE PIPE
DI	DUCTILE IRON (PIPE)	RD	ROAD (OR ROOF DRAIN)
DIA	DIAMETER	RED	REDUCER
DIM	DIMENSION	RELOC	RELOCATE
DMH	DRAIN MANHOLE	REM	REMOVE
DW	DOMESTIC WATER (OR DRY WELL)	RET	RETAIN, RETAINING OR RETENTION
DWG	DRAWING	ROW	RIGHT OF WAY
DYCL	DOUBLE YELLOW CENTERLINE	RR	RAILROAD
		RWL	RAIN WATER LEADER
EHH	ELECTRIC HANDHOLE	RWY	ROADWAY
EL	ELEVATION	SD	SUBDRAIN
ELEC	ELECTRIC	SF	SQUARE FEET
EMH	ELECTRIC MANHOLE	SGC	SLOPED GRANITE CURB
EOP	EDGE OF PAVEMENT	SMH	SEWER MANHOLE
EOR	EDGE OF ROAD	SP	STANDPIPE
EOW	EDGE OF WETLANDS	SPEC	SPECIFICATION
ETC	ELECTRIC, TELEPHONE, CABLE	STA	STATION
EXIST	EXISTING	STC	STORMCEPTOR
EXT	EXTERIOR	STD	STANDARD
		STRTL	STRUCTURAL
FA	FIRE ALARM	SWEL	SOLID WHITE EDGE LINE
FCC	FLUSH CONCRETE CURB	SW	SIDEWALK
FES	FLARED END SECTION	SWLL	SOLID WHITE LANE LINE
FFE	FINISH FLOOR ELEVATION	SYCL	SOLID YELLOW CENTERLINE
FLNP	FIRE LANE NO PARKING		
FPS	FEET PER SECOND	TB	TEST BORING
FS	FIRE SERVICE	TC	TOP OF CURB
FT	FOOT/FEET	TD	TRENCH DRAIN
		TEL T	TELEPHONE
GC	GENERAL CONTRACTOR	TMH	TELEPHONE MANHOLE
GEN	GENERAL	TOS	TOP OF SLOPE
GG	GAS GATE	TOW	TOP OF WALL
GR	GUIDE RAIL	TP	TEST PIT
GRAN	GRANITE	TS&V	TAPPING SLEEVE & VALVE
GV	GATE VALVE	TYP	TYPICAL
GV&B	GATE VALVE & BOX	UD	UNDERDRAIN
GW	GROUND WATER	UL	UNDERWRITERS LABORATORY
		UP	UTILITY POLE
HOR	HORIZONTAL	VCP	VITRIFIED CLAY PIPE
HT	HEIGHT	VERT	VERTICAL
HW	HEADWALL	VGC	VERTICAL GRANITE CURB
HWY	HIGHWAY		
HYD	HYDRANT	WD	WOOD
		WG	WATER GATE
ID	INSIDE DIAMETER	WM	WATER MAIN
IN	INCHES	WMH	WATER MANHOLE
INCL	INCLUDE	WSO	WATER SHUTOFF
INST	INSTALLED		
INV, I.E.	INVERT, INVERT ELEVATION		

N:\PROJECTS\2075-01\CIVIL\DRAWINGS\CURRENT\2075-01 - ABBREVIATIONS & NOTES.DWG

JPI

WAIVERS OF TOWN OF BOXBOROUGH ZONING BYLAWS:
4.4003(1) USE REGULATION SCHEDULE
WAIVER TO PERMIT SINGLE-FAMILY AND MULTI-FAMILY ATTACHED RESIDENTIAL USES NOT OTHERWISE PERMITTED IN THE INDUSTRIAL/COMMERCIAL DISTRICT (I.E. THE PROPOSED TWO (2) SINGLE FAMILY DWELLINGS AND THE PROPOSED 244 APARTMENT UNITS IN ELEVEN (11) MULTI-FAMILY BUILDINGS, FOR A TOTAL OF 246 UNITS)
4.4033 USE REGULATION SCHEDULE
WAIVER TO PERMIT A USE WHICH IS NOT OTHERWISE ACCESSORY TO INDUSTRIAL-COMMERCIAL USES, I.E., A CLUBHOUSE/RENTAL OFFICE.
5.5002 DIMENSIONAL SCHEDULE
WAIVER OF REQUIREMENT FOR A MAXIMUM FLOOR AREA RATIO OF 0.10.
6.6004 SURFACE, CIRCULATION, AND LANDSCAPING REQUIREMENTS
WAIVER OF REQUIREMENT THAT AUTOMOBILE PARKING SPACES SHALL NOT BE LESS THAN 10 FEET BY 20 FEET, IN ORDER TO ALLOW PARKING SPACES OF 9 FEET BY 18 FEET
6.6103 MULTIPLE BUILDINGS ON ONE LOT
WAIVER OF REQUIREMENT THAT WHERE MORE THAN ONE BUILDING IS PROPOSED TO BE BUILT UPON A LOT, THE PLAN SHALL BE REVIEWED BY THE PLANNING BOARD REGARDING ADEQUACY OF ACCESS TO BUILDINGS, IN ORDER TO SUBSTITUTE THE PERMISSION FROM THE ZONING BOARD OF APPEALS GRANTED UNDER THIS COMPREHENSIVE PERMIT.
6.6105 PRIVATE/COMMON DRIVEWAYS IN THE BUSINESS, BUSINESS 1, OFFICE PARK, TOWN CENTER, AND INDUSTRIAL-COMMERCIAL DISTRICTS
WAIVER OF THE REQUIREMENT THAT PRIVATE/COMMON DRIVEWAYS ARE ALLOWED IN THE C DISTRICT ONLY BY SPECIAL PERMIT OF THE PLANNING BOARD, IN ORDER TO SUBSTITUTE THE PERMISSION FROM THE ZONING BOARD OF APPEALS UNDER THIS COMPREHENSIVE PERMIT.
7.7004(G) SPECIAL REGULATIONS AQUIFER PROTECTION DISTRICT
WAIVER OF REQUIREMENT THAT THERE BE NO DISPOSAL OF SANITARY WASTE TO A SUBSURFACE DISPOSAL SYSTEM IN QUANTITIES EXCEEDING 440 GALLONS PER DAY PER ACRE OF AQUIFER PROTECTION DISTRICT CONTAINED WITHIN THE LOT, IN ORDER TO ALLOW QUANTITIES OF UP TO 750 GALLONS PER DAY PER ACRE OF THE SITE IN THE AQUIFER PROTECTION DISTRICT IN THE EVENT RESERVE LEACHING FIELDS ARE USED.
7.7007(1) DESIGN REQUIREMENTS
WAIVER OF REQUIREMENT THAT WHERE A PORTION OF THE SITE IS LOCATED OUTSIDE OF THE AQUIFER PROTECTION DISTRICT, POTENTIAL POLLUTION SOURCES, SUCH AS ON SITE DISPOSAL SYSTEMS, SHOULD BE LOCATED OUTSIDE THE DISTRICT BOUNDARIES, IN ORDER TO ALLOW RESERVE LEACHING FIELD TO BE LOCATED WITHIN THE AQUIFER PROTECTION DISTRICT.
7.7104(A) AND (H) W-DISTRICT USE REGULATIONS
WAIVER OF REQUIREMENTS FOR SPECIAL PERMIT FOR USE IN THE W-DISTRICT, IN ORDER TO SUBSTITUTE APPROVAL UNDER THIS COMPREHENSIVE PERMIT.
7.7109 SUBMITTALS
WAIVER OF REQUIREMENTS FOR SPECIAL PERMIT APPLICATIONS TO BE PREPARED AND SUBMITTED TO THE BOARD OF APPEALS IN ORDER TO PERMIT ONE COMPREHENSIVE SUBMISSION TO THE BOARD TO BE ACTED ON UNDER G.L. C. 40B, §21.
7.7109 PROCEDURES
WAIVER OF REQUIREMENT FOR SPECIAL PERMIT APPLICATIONS TO BE PREPARED AND SUBMITTED TO THE BOARD OF APPEALS IN ORDER TO PERMIT A SINGLE COMPREHENSIVE PERMIT SUBMISSION TO THE BOARD TO BE ACTED UPON UNDER G.L. C.40B, §21.
7.7200 LANDS BORDERING THE W-DISTRICT
WAIVER OF REQUIREMENT FOR SPECIAL PERMIT TO PLACE STRUCTURES WITHIN ONE HUNDRED (100') FEET OF THE W-DISTRICT, IN ORDER TO PERMIT CONSTRUCTION OF WARD ROAD AND A FIRE POND WITHIN 100' OF W-DISTRICT.
8.8000 SITE PLAN APPROVAL & DESIGN REVIEW
WAIVER OF REQUIREMENT FOR SITE PLAN REVIEW BY THE PLANNING BOARD FOR THE CONSTRUCTION OF MULTI-FAMILY STRUCTURES AND PARKING AREAS ASSOCIATED WITH MULTI-FAMILY STRUCTURES.
9.9001(2) BUILDING PERMITS
WAIVER OF REQUIREMENT THAT NO BUILDING PERMIT SHALL BE ISSUED BY THE INSPECTOR OF BUILDINGS, WITHOUT THE WRITTEN APPROVAL OF A SITE PLAN BY THE PLANNING BOARD.

WAIVERS FROM TOWN OF BOXBOROUGH REGULATIONS FOR THE WETLAND BYLAW:
SECTION 2.5.3.1 PERFORMANCE STANDARDS
WAIVER OF PROHIBITION OF PARKING LOTS, PERMANENT STRUCTURES, AND SANITARY WASTE DISPOSAL SYSTEMS WITHIN ADJACENT LAND RESOURCE AREA, IN ORDER TO ALLOW THE PLACEMENT OF PERMANENT STRUCTURES, WASTE DISPOSAL SYSTEM, PARKING LOT, ROAD AND OTHER PERMANENT IMPROVEMENTS WITHIN THE ADJACENT LAND RESOURCE AREA TO BE CONSTRUCTED IN ACCORDANCE WITH THE SITE PLAN APPROVED FOR THE PROJECT UNDER THIS COMPREHENSIVE PERMIT.

WAIVERS FROM BOXBOROUGH COMPREHENSIVE PERMIT RULES OF THE BOARD OF APPEALS:
SECTION 3.02(1) LIST OF REQUESTED EXCEPTIONS
WAIVER OF REQUIREMENT THAT APPLICANT PROVIDES A COMPLETE LIST OF ALL REQUESTED EXCEPTIONS AT THE TIME OF THE INITIAL FILING OF THE APPLICATION IN ORDER TO PERMIT THE LIST TO BE REVISED AS THE PROJECT EVOLVES THROUGH THE HEARING AND APPROVAL PROCESS.

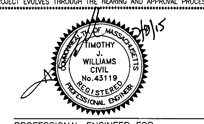

PROFESSIONAL ENGINEER FOR
ALLEN & MAJOR ASSOCIATES, INC.

REV	DATE	DESCRIPTION
9.	07/08/2015	ISSUED FOR DEFINITIVE SITE PLAN
8.	06/12/2015	REVISED PER FIRE DEPARTMENT COMMENTS
7.	05/15/2015	ISSUED FOR PERMIT
6.	05/05/2015	ISSUED FOR DEP PERMIT APPROVAL
5.	05/04/2015	REVISED FOR PRICING
4.	03/26/2015	REVISED PER TOWN COMMENTS
3.	03/02/2015	ISSUED FOR MEPA
2.	02/27/2015	REVISED PER TOWN COMMENTS
1.	02/12/2015	ISSUED FOR ZONING BOARD OF APPEALS

APPLICANT:
JPI
3 WEST MAIN STREET, SUITE 203
IRVINGTON, NY 10533

PROJECT:
DEFINITIVE SITE PLAN SET
JEFFERSON AT BEAVER BROOK
BOXBOROUGH, MA

PROJECT NO.	2075-01	DATE:	02-11-2015
SCALE:	AS NOTED	DWG. NAME:	C2075-10
DESIGNED BY:	SJL	CHECKED BY:	CMQ

PREPARED BY:
ALLEN & MAJOR ASSOCIATES, INC.
civil & structural engineering ◆ land surveying
environmental consulting ◆ landscape architecture
www.allenmajor.com
100 COMMERCE WAY
P.O. BOX 2118
WOBURN MA 01888-0118
TEL: (781) 935-6889
FAX: (781) 935-2896
WOBURN, MA ◆ LAKEVILLE, MA ◆ MANCHESTER, NH

THIS DRAWING HAS BEEN PREPARED IN ELECTRONIC FORMAT. CLIENT/CLIENTS REPRESENTATIVE OR CONSULTANT MAY BE PROVIDED COPIES OF DRAWINGS AND SPECIFICATIONS ON MAGNETIC MEDIA FOR HIS/HER INFORMATION AND USE FOR SPECIFIC APPLICATION TO THIS PROJECT. DUE TO THE POTENTIAL THAT THE MAGNETIC INFORMATION MAY BE MODIFIED UNINTENTIONALLY OR OTHERWISE, ALLEN & MAJOR ASSOCIATES, INC. MAY REMOVE ALL INDICATION OF THE DOCUMENTS AUTHORSHIP ON THE MAGNETIC MEDIA. PRINTED REPRESENTATIONS OF THE DRAWINGS AND SPECIFICATIONS ISSUED SHALL BE THE ONLY RECORD COPIES OF ALLEN & MAJOR ASSOCIATES, INC.'S WORK PRODUCT.

DRAWING TITLE:	SHEET No.
ABBREVIATIONS & NOTES	ABB-1

Copyright©2015 Allen & Major Associates, Inc.
All Rights Reserved

EROSION CONTROL & SWPPP NOTES

EROSION & SEDIMENTATION CONTROL NOTES:

1. EROSION CONTROL SHALL BE INSTALLED PRIOR TO CONSTRUCTION AND SHALL BE ADEQUATE TO MAINTAIN SEDIMENT ON SITE. ANY MODIFICATIONS TO SILT CONTROLS SHOWN ON THE APPROVED PLANS AS A RESULT OF ACTUAL FIELD CONDITIONS OR CONSTRUCTION PRACTICES SHALL BE INSTALLED IN ACCORDANCE WITH B.M.P. (BEST MANAGEMENT PRACTICES) PER THE E.P.A. 2008 "CONSTRUCTION GENERAL PERMIT" MANUAL, AND MASSACHUSETTS 2003 EROSION & SEDIMENT CONTROL GUIDELINES FOR URBAN AND SUBURBAN AREAS, ANY SUCH MODIFICATIONS FROM THE ABOVE MANUALS SHALL BE INSTALLED AS APPROVED BY THE ENGINEER.

2. AREAS OF EXPOSED SOIL UNDERGOING CONSTRUCTION THAT WILL NOT BE COVERED AND OR FINISHED GRADED SHALL BE STABILIZED AS SOON AS PRACTICABLE BUT IN NO CASE MORE THAN 14 DAYS AFTER THE CONSTRUCTION ACTIVITY (UNLESS TOWN HAS STRICTER REQUIREMENTS WHICH SHALL BE FOLLOWED) IN THAT PORTION OF THE SITE HAS TEMPORARILY OR PERMANENTLY CEASED. TEMPORARY EROSION CONTROL MEASURES SHALL INCLUDE EROSION CONTROL MESH, NETTING OR MULCH AS DIRECTED BY THE OWNER'S REPRESENTATIVE AND SHOWN ON THE DESIGN PLANS. IF MULCH IS USED, STRAW MULCH SHALL BE APPLIED AT THE RATE OF 4 BALES PER 1,000 SQUARE FEET. APPLICATION AREA SHALL BE SUFFICIENTLY COVERED WITH MULCH TO AVOID ANY VISIBLE SOIL EXPOSURE. MULCH SHALL BE KEPT MOIST TO AVOID LOSS DUE TO WIND. MULCH AND NETTING SHALL BE APPLIED IN THE BASE OF ALL GRASSED WATERWAYS, IN VEGETATIVE SLOPES WHICH EXCEED 15% AND DISTURBED AREAS WITHIN 100 FEET OF WETLANDS OR STREAMS.

3. IF DISTURBED AREAS DO NOT RECEIVE FINAL SEEDING BY OCTOBER 1ST OF THE CONSTRUCTION YEAR, THEN ALL DISTURBED AREAS SHALL BE SEEDED WITH A WINTER COVER CROP AT THE RATE OF 3 LBS PER 1,000 SQUARE FEET. WINTER SEEDING SHALL BE COVERED WITH EROSION CONTROL MESH (MULCH AND NETTING). HEAVY GRADE MATS SHALL BE USED IN THE BASE OF ALL GRASSED WATERWAYS ON VEGETATED SLOPES IN EXCESS OF 15%, AND ANY DISTURBED AREAS WITHIN 100 FEET OF WETLANDS OR STREAMS. MULCH AND NETTING SHALL ALSO BE PROVIDED FOR ADDITIONAL WINTER PROTECTION.

4. ALL TOPSOIL SHALL BE COLLECTED, STOCKPILED, SEEDED WITH RYE AT 3LBS PER 1,000 SQUARE FOOT AND MULCHED, AND REUSED AS REQUIRED. SILTATION FENCING SHALL BE PLACED DOWN GRADIENT FROM STOCKPILED LOAM. LOAM SHALL BE STOCKPILED AT LOCATIONS DESIGNATED BY THE OWNER AND ENGINEER.

5. ALL FILTER BARRIERS, SILT SACKS, AND EROSION CONTROL BERMS SHALL BE INSTALLED ACCORDING TO THE EROSION CONTROL PLAN. THESE SHALL BE MAINTAINED DURING DEVELOPMENT TO REMOVE SEDIMENT FROM RUNOFF WATER. ALL THE FILTER BARRIERS AND EROSION CONTROL BERMS SHALL BE INSPECTED AFTER ANY RAINFALL OR RUNOFF EVENT, MAINTAINED AND CLEANED UNTIL ALL AREAS HAVE AT LEAST 85-90% VIGOROUS PERENNIAL COVER OF GRASSES.

6. ADJACENT ROADS SHALL BE PERIODICALLY SWEPT OR WASHED TO AVOID TRACKING MUD, DUST OR DEBRIS FROM THE CONSTRUCTION AREA AS OFTEN AS NECESSARY (WHICH COULD BE ON A DAILY BASIS) TO REMOVE ANY SOIL OR SEDIMENTS AT NO ADDITIONAL COST TO THE OWNER. A WATERING TRUCK WILL BE USED TO PERIODICALLY SPRINKLE CONSTRUCTION AREAS IN ORDER TO KEEP THE LEVEL OF DUST TO A MINIMUM DURING THE DRY MONTHS AT NO ADDITIONAL COST TO THE OWNER.

7. THE CONTRACTOR SHALL USE EXTREME CAUTION TO AVOID ALLOWING SEDIMENTS TO ENTER THE STORM DRAIN SYSTEM DURING CONSTRUCTION. BOTH EXISTING AND PROPOSED CATCH BASIN INLETS SHALL BE PROTECTED DURING CONSTRUCTION BY THE USE SILT SACKS AND OR STRAW BALE BARRIERS AROUND EACH INLET AS NOTED ON THE PLANS. INLET PROTECTION MAY BE REMOVED ONLY AFTER FINISHED AREAS ARE PAVED AND THE VEGETATED SLOPES ARE ESTABLISHED WITH AT LEAST 85-90% OF VIGOROUS PERENNIAL GROWTH.

8. AS APPLICABLE, EROSION CONTROL MESH SHALL BE APPLIED IN ACCORDANCE WITH THE PLANS OVER ALL FINISHED SEEDED AREAS AS SPECIFIED ON THE DESIGN PLANS.

9. AT A MINIMUM, ALL STRAW BALES, SILT FENCE AND FILTER FABRIC SHALL REMAIN IN PLACE UNTIL SEEDLINGS OR PLANTINGS HAVE BECOME 85-90% ESTABLISHED. THE TOWN OF BOXBOROUGH CONSERVATION COMMISSION MUST APPROVE THE REMOVAL OR RELOCATION OF ANY OF THE STRAW BALES AND FILTER FABRIC. ONCE THE STRAW BALES AND SILT FENCE IS REMOVED THE AREAS ARE TO BE LOAM AND SEEDED TO ACHIEVE FULL STABILIZATION.

10. AT THE OWNER'S DISCRETION ADDITIONAL EROSION CONTROL MEASURES MAY BE REQUIRED TO MAINTAIN STABILITY OF EARTHWORKS AND FINISHED GRADED AREAS. THE CONTRACTOR, AT HIS EXPENSE, WILL BE RESPONSIBLE FOR PROVIDING AND INSTALLING ANY ADDITIONAL MEASURES AS SPECIFIED BY THE OWNER. THIS INCLUDES BUT IS NOT LIMITED TO REQUESTS BY MA DEP. THE ENGINEER AND THE MUNICIPALITY, AS AUTHORIZED BY THE OWNER. FAILURE TO COMPLY WITH THE OWNER'S DIRECTIONS WILL RESULT IN DISCONTINUATION OF CONSTRUCTION ACTIVITIES.

11. INSPECTIONS AND MONITORING MAINTENANCE MEASURES SHALL BE APPLIED AS NEEDED DURING THE ENTIRE CONSTRUCTION CYCLE. WEEKLY INSPECTIONS SHALL BE HELD THROUGH THE DURATION OF CONSTRUCTION ACTIVITY. WEEKLY INSPECTION REPORTS SHALL BE MAINTAINED BY THE CONTRACTOR AND LOCATED IN THE CONTRACTORS FIELD OFFICE ONSITE. IN ADDITION TO THE NORMAL WEEKLY INSPECTIONS, THE CONTRACTOR SHALL PERFORM AN INSPECTION OF ALL EROSION CONTROL MEASURES AFTER EACH RAINFALL OR RUNOFF EVENT, AND PERFORM THE NECESSARY REPAIRS. THE INSPECTIONS SHALL INCLUDE BUT NOT BE LIMITED TO THE SITE'S DOWN STREAM DISCHARGE POINTS.

12. IF ANY EVIDENCE OF SEDIMENTATION IS OBSERVED AT THE STORMWATER MANAGEMENT AREA INLETS, THE CONTRACTOR SHALL, AT HIS OWN EXPENSE, PROVIDE A PLAN TO THE ENGINEER TO REMOVE ANY ACCUMULATED SEDIMENT IN THESE AREAS. THE CONTRACTOR SHALL ALSO IMMEDIATELY PROVIDE ADDITIONAL ON SITE EROSION AND SEDIMENTATION CONTROL MEASURES TO PREVENT FURTHER DEGRADATION OF THE AREA.

13. FOLLOWING THE TEMPORARY OR FINAL SEEDINGS, THE CONTRACTOR SHALL INSPECT THE WORK AREA SEMI-MONTHLY TO ENSURE THE AREAS HAVE A MINIMUM OF 85-90% VEGETATED VIGOROUS GROWTH. RE-SEEDING SHALL BE CARRIED OUT BY THE CONTRACTOR WITH FOLLOW UP INSPECTIONS IN THE EVENT OF ANY FAILURES UNTIL VEGETATION IS ADEQUATELY ESTABLISHED.

14. CONTRACTOR & ALL SITE SUBCONTRACTORS SHALL BE FAMILIAR WITH & FOLLOW ALL APPROVED PERMITS AND CONDITIONS. CONTRACTOR SHALL MAINTAIN A COPY OF ALL APPROVED PERMITS ONSITE, INCLUDING THE ORDER OF CONDITIONS FROM THE BOXBOROUGH CONSERVATION COMMISSION. ALL CONDITIONS & RECOMMENDATIONS WITHIN THE APPROVED PERMITS SHALL BE COMPLETED.

15. ALL EROSION MEASURES SHALL BE INSTALLED PRIOR TO CONSTRUCTION AND SHALL BE ADEQUATE TO MAINTAIN SEDIMENT ON SITE. ANY MODIFICATIONS SHALL BE INSTALLED AS DIRECTED BY THE ENGINEER OR THE TOWN OF BOXBOROUGH.

16. EROSION AND SEDIMENTATION CONTROL MEASURES SHALL BE MAINTAINED DURING CONSTRUCTION, AND SHALL REMAIN IN PLACE UNTIL ALL SITE WORK IS COMPLETE AND GROUND COVER IS ESTABLISHED.

17. TOP OF STOCKPILES SHALL BE COVERED IN SUCH MANNER THAT STORMWATER DOES NOT INFILTRATE THE MATERIALS AND THEREBY RENDER THE SAME UNSUITABLE FOR FILL USE.

18. ALL DISTURBED OR EXPOSED AREAS SUBJECT TO EROSION SHALL BE STABILIZED WITH MULCH OR SEEDED FOR TEMPORARY VEGETATIVE COVER. NO AREA, SUBJECT TO EROSION SHALL BE LEFT DISTURBED AND UNSTABILIZED FOR PERIODS LONGER THAN IS ABSOLUTELY NECESSARY TO CARRY OUT THAT PORTION OF THE CONSTRUCTION WORK OR SIX MONTHS AFTER SOIL HAS BEEN DISTURBED WHICHEVER IS LESS.

19. CULVERT/PIPE INLETS AND OUTFALLS SHALL BE PROTECTED BY STRAW BALE FILTERS AND STONE CHECK DAMS UNTIL DISTURBED AREAS ARE PERMANENTLY STABILIZED.

20. STRAW BALE DIKES SHALL BE CONSTRUCTED AT ALL EXISTING & PROPOSED CATCH BASINS. NO SEDIMENTATION SHALL ENTER THE ON-SITE OR OFF-SITE DRAINAGE SYSTEMS AT ANY TIME.

21. ALL EROSION CONTROL MEASURES SHALL BE ROUTINELY INSPECTED, CLEANED AND REPAIRED OR REPLACED AS NECESSARY THROUGHOUT ALL PHASES OF CONSTRUCTION. IN ADDITION, INSPECTION SHALL TAKE PLACE WEEKLY AND BEFORE AND AFTER EACH RAINFALL EVENT.

22. ALL PROPOSED SLOPES EQUAL TO OR GREATER THAN 3:1 SHALL BE STABILIZED WITH JUTE MESH AND PROTECTED FROM EROSION UNTIL WORK IS COMPLETE AND GROUND COVER IS ESTABLISHED.

23. THE CONTRACTOR SHALL KEEP ON SITE AT ALL TIMES ADDITIONAL STRAW BALES AND EXTRA SILTATION FENCING FOR INSTALLATION AT THE DIRECTION OF THE ENGINEER OR THE TOWN ENGINEER TO MITIGATE ANY EMERGENCY CONDITION.

24. AS CONSTRUCTION DISTURBANCE IS GREATER THAN 1 ACRE, A NATIONAL POLLUTANT DISCHARGE ELIMINATION SYSTEM (NPDES) CONSTRUCTION GENERAL PERMIT NOI, AND STORM WATER POLLUTION PREVENTION PLAN (SWPPP) WILL NEED TO BE SUBMITTED TO THE EPA. THE NPDES PERMIT FOR STORM WATER DISCHARGE, & CONSTRUCTION GENERAL PERMIT NOI WILL BE REQUIRED TO BE SUBMITTED AT LEAST 14 DAYS PRIOR TO COMMENCING CONSTRUCTION BY THE CONTRACTOR.

25. OWNER AND CONTRACTOR ARE RESPONSIBLE FOR COMPLIANCE WITH THE CONSTRUCTION GENERAL PERMIT NOI. WEEKLY SWPPP INSPECTION REPORTS TO BE PERFORMED BY CONTRACTOR. COPIES OF ALL SWPPP INSPECTION REPORTS SHALL BE PROVIDED TO THE TOWN OF BOXBOROUGH, EPA, DEP, OR ANY OTHER AUTHORITY REQUESTING WITHIN 3 DAYS OF EACH INSPECTION.

26. APPLICABLE WORK AND MATERIALS SHALL COMPLY WITH ALL TOWN OF BOXBOROUGH, MA DEP, EPA CONSTRUCTION GENERAL PERMIT STANDARDS. ALL CONSTRUCTION SHALL CONFORM TO THE APPLICABLE SITE PLAN REGULATIONS FROM THE TOWN OF BOXBOROUGH AND USDA SOIL CONSERVATION SERVICE VEGETATIVE PRACTICES IN SITE DEVELOPMENT.

EROSION & SEDIMENTATION CONTROL NOTES (CONTINUED):

27. A WATERING TRUCK SHALL BE USED TO PERIODICALLY SPRINKLE CONSTRUCTION AREAS IN ORDER TO KEEP THE LEVEL OF DUST TO A MINIMUM DURING THE DRY MONTHS AND AS REQUIRED.

28. IF DEWATERING IS NECESSARY IT SHALL ONLY BE COMPLETED AS FOLLOWS: THE DISCHARGE SHALL BE STOPPED IMMEDIATELY IF THE RECEIVING AREA SHOWS ANY SIGN OF INSTABILITY OR EROSION. ALL CHANNELS, SWALES, AND DITCHES DUG FOR DISCHARGING WATER FROM THE EXCAVATED AREA SHALL BE STABLE PRIOR TO DIRECTING DISCHARGE TO THEM. IF A CONSTRUCTION EQUIPMENT BUCKET IS USED, IT SHALL EMPTY THE MATERIAL TO A STABLE AREA. NO DEWATERING SHALL OCCUR DURING PERIODS OF INTENSE, HEAVY RAIN. FLOW TO THE SEDIMENT REMOVAL STRUCTURE SHALL NOT EXCEED THE STRUCTURES CAPACITY TO SETTLE AND FILTER FLOW OR IS VOLUME CAPACITY. WHENEVER POSSIBLE, THE DISCHARGE FROM THE SEDIMENT REMOVAL STRUCTURE SHALL DRAIN TO A WELL-VEGETATED BUFFER BY SHEET FLOW WHILE MAXIMIZING THE DISTANCE TO THE NEAREST WATER RESOURCE AND MINIMIZING THE SLOPE OF THE BUFFER AREA. THERE SHALL BE NO DIRECT DISCHARGE TO EXISTING WETLANDS OR STREAMS. ALL DISCHARGE SHALL BE IN COMPLIANCE WITH STATE, LOCAL, AND FEDERAL REQUIREMENTS.

29. INITIATE STABILIZATION IMMEDIATELY IF CONSTRUCTION WORK TEMPORARILY OR PERMANENTLY CEASES.

30. ALL DISCHARGES FROM POLLUTION SOURCES IS PROHIBITED ONSITE SUCH AS FUELS, WASTEWATER FROM WASH OUT OF CONCRETE, WASTEWATER FROM CLEAN OUT OF PAINTS, FORM RELEASE OILS, SOLVENTS, ADHESIVES, CURING COMPOUNDS, POLLUTANTS USED FOR MAINTENANCE OF VEHICLES AND EQUIPMENT, SOAPS & SOLVENTS, TOXIC OR HAZARDOUS SUBSTANCES, CHEMICALS AND OILS. IF A POLLUTANT IS DISCHARGED IT NEEDS TO BE IMMEDIATELY CLEANED UP BY REMOVING THE CHEMICAL AND AFFECTED SOIL OR AREA OF SPILL FROM THE SITE IN ACCORDANCE WITH BOTH THE MANUFACTURER RECOMMENDATIONS, FEDERAL, STATE, AND LOCAL REQUIREMENTS. DO NOT HOSE DOWN AND SPREAD SPILLED ITEM. ALL CHEMICALS USED ON THE SITE SHALL BE IN LEAK-PROOF CONTAINERS STORED AWAY FROM WETLANDS, SURFACE WATERS, STORMWATER INLETS, AND DRAINAGE MEASURES. SPILL KITS SHALL BE AVAILABLE ONSITE FOR EMERGENCY USE. THERE SHALL BE A SECONDARY CONTAINMENT MEASURE OF ALL CHEMICALS IN ADDITION TO SPILL-PROOF CONTAINERS.

31. PRIOR TO COMMENCEMENT OF CONSTRUCTION, APPLICABLE CONTRACTOR PERSONNEL MUST HAVE AN UNDERSTANDING OF THE EPA CONSTRUCTION GENERAL PERMIT REQUIREMENTS AND THEIR SPECIFIC RESPONSIBILITIES UNDER THE PERMIT. AT A MINIMUM, PERSONNEL MUST BE TRAINED AND UNDERSTAND THE FOLLOWING: LOCATION OF ALL STORMWATER CONTROLS AND HOW TO MAINTAIN THEM, PROCEDURES FOR COMPLYING WITH THE POLLUTION PREVENTION REQUIREMENTS. PROCEDURES FOR CONDUCTING INSPECTIONS, RECORDING FINDINGS, AND TAKING CORRECTIVE ACTION.

32. ALL SEDIMENT TRACKED ONTO ROADWAYS MUST BE REMOVED AT END OF EACH WORK DAY.

33. ALL USE OF CATIONIC TREATMENT CHEMICALS (EXAMPLES INCLUDE POLYMERS, CHITOSAN, CATIONIC PAM, FLOCCULANTS OR OTHER CHEMICAL UTILIZED FOR STABILIZATION) ARE PROHIBITED. IF ALL OTHER AVAILABLE STABILIZATION MEASURES ARE NOT POSSIBLE AND USE OF CATIONIC CHEMICALS IS ABSOLUTELY NECESSARY THE CONTRACTOR WILL NEED TO CONTACT THE EPA NEW ENGLAND OFFICE IN WRITING FOR APPROVAL AND SPECIFIC REQUIREMENTS (MAXIMUM DOSAGE RATE, RESIDUAL TESTING, SPECIFIC LIMITATIONS, ETC) PRIOR TO USE.

34. IF USING NON-VEGETATIVE STABILIZATION MEASURES, IT MUST BE COMPLETED NO LATER THAN 14 DAYS AFTER INITIATING STABILIZATION. ALL AREAS OF EXPOSED SOILS MUST BE COVERED.

35. INSPECTIONS OF EROSION CONTROL MEASURES SHALL BE AT LEAST ONCE EVERY 7 DAYS BY THE CONTRACTOR. AT A MINIMUM INSPECTIONS SHALL INCLUDE ALL DISTURBED AREAS, ALL STORMWATER CONTROLS AND POLLUTION PREVENTION MEASURES, ALL LOCATIONS WHERE STABILIZATION MEASURES HAVE BEEN IMPLEMENTED, EQUIPMENT AND MATERIAL STORAGE AREAS, ALL AREAS WHERE STORMWATER FLOWS AND ALL POINTS OF DISCHARGE. WHEN CORRECTIVE ACTIONS ARE REQUIRED, THE CONTRACTOR MUST IMMEDIATELY TAKE ALL STEPS TO PREVENT POLLUTANT DISCHARGES UNTIL A PERMANENT SOLUTION IS IMPLEMENTED. AS NECESSARY NEW OR MODIFIED CONTROLS MUST BE INSTALLED AND OPERATIONAL, THE REPAIR MUST BE COMPLETED WITHIN 7 DAYS FROM THE TIME OF DISCOVERY. WITHIN 24 HOURS OF A TRIGGERING CONDITION OCCURRING THAT REQUIRES A CORRECTIVE ACTION, A CORRECTIVE ACTION REPORT MUST BE COMPLETED.

36. AS REQUIRED BY THE BOXBOROUGH CONSERVATION COMMISSION, CONTRACTOR MUST PARK AND STORE ALL CONSTRUCTION EQUIPMENT OUTSIDE THE TOWN OF BOXBOROUGH 150 FOOT WETLANDS BUFFER AT THE END OF EACH DAY. ITEMS TO BE ADDITIONALLY COMPLETED OUTSIDE OF THE TOWN OF BOXBOROUGH 150 FOOT WETLANDS BUFFER INCLUDES FUEL STORAGE, REFUELING OPERATIONS, CLEANING OF EQUIPMENT (INCLUDING THE WASHING / RINSING OF CONCRETE TRANSPORTS)

MAINTENANCE:

ALL MEASURES STATED ON THE STORMWATER POLLUTION PREVENTION PLANS, SHALL BE MAINTAINED IN FULLY FUNCTIONAL CONDITION BY CONTRACTOR UNTIL NO LONGER REQUIRED FOR A COMPLETED PHASE OF WORK OR FINAL STABILIZATION OF THE SITE. ALL EROSION AND SEDIMENTATION CONTROL MEASURES SHALL BE CHECKED BY A QUALIFIED PERSON IN ACCORDANCE WITH THE CONTRACT DOCUMENTS OR THE APPLICABLE PERMIT, WHICHEVER IS MORE STRINGENT, AND REPAIRED IN ACCORDANCE WITH THE FOLLOWING:

1. INLET PROTECTION DEVICES AND BARRIERS SHALL BE REPAIRED OR REPLACED IF THEY SHOW SIGNS OF UNDERMINING, OR DETERIORATION.
2. ALL SEEDED AREAS SHALL BE CHECKED REGULARLY TO SEE THAT A HEALTHY STAND OF GRASS IS MAINTAINED. AREAS SHOULD BE FERTILIZED, WATERED, AND RESEEDED AS NEEDED.
3. ALL SEDIMENT CONTROLS SHALL BE REPAIRED TO THEIR ORIGINAL CONDITIONS IF DAMAGED. SEDIMENT SHALL BE REMOVED FROM THE TUBULAR SEDIMENT CONTROLS WHEN IT REACHES HALF THE HEIGHT OF THE CONTROL MEASURE OR AS REQUESTED BY THE OWNER OR ENGINEER.
4. THE CONSTRUCTION ENTRANCES SHALL BE MAINTAINED IN A CONDITION WHICH WILL PREVENT TRACKING OR FLOW OF MUD ONTO PUBLIC RIGHTS-OF-WAY. THIS MAY REQUIRE PERIODIC TOP DRESSING OF THE CONSTRUCTION ENTRANCES AS CONDITIONS DEMAND.
5. THE TEMPORARY PARKING AND STORAGE AREA SHALL BE KEPT IN GOOD CONDITION (SUITABLE FOR PARKING AND STORAGE). THIS MAY REQUIRE PERIODIC TOP DRESSING OF THE TEMPORARY PARKING AS CONDITIONS DEMAND.
6. OUTLET STRUCTURES IN THE SEDIMENTATION BASINS SHALL BE MAINTAINED IN OPERATIONAL CONDITIONS AT ALL TIMES. SEDIMENT SHALL BE REMOVED FROM SEDIMENT BASINS OR TRAPS WHEN THE DESIGN CAPACITY HAS BEEN REDUCED BY 50%.

CONSTRUCTION GENERAL PERMIT NOTES AND NARRATIVE:

NARRATIVE: THE STORM WATER POLLUTION PREVENTION PLANS CONSIST OF THE EROSION CONTROL PLANS TOGETHER WITH THE EXISTING CONDITIONS PLANS, GRADING & DRAINAGE PLANS, ABBREVIATIONS AND NOTES SHEETS, AND DETAIL SHEETS.

THE EROSION CONTROL PLAN WILL BE IMPLEMENTED TO:

A. TREAT EROSION AS SOON AS POSSIBLE AFTER DISTURBANCE.

B. PREVENT SEDIMENT FROM LEAVING THE CONSTRUCTION AREA AND ENTERING THE RECEIVING WATERS.

C. CONSTRUCTION ACTIVITIES SHALL BE SCHEDULED TO MINIMIZE EROSION.

D. ONLY DISTURB, CLEAR, OR GRADE AREAS NECESSARY FOR CONSTRUCTION.

STORMWATER POLLUTION PREVENTION PLAN

2.1 GENERAL

FOR GRADING AND DRAINAGE SEE DRAWING SHEETS C-2A, C-2B & C-2C.

2.1.1. THE FIRST STAGE INVOLVES ACTIVITIES NEEDED TO ADDRESS STORMWATER MANAGEMENT; EXCAVATING MATERIAL DESIGNATED FOR OFF-SITE REMOVAL OR ON-SITE RELOCATION; AND FENCING SELECTED AREAS. STAGE ONE WILL PREPARE SITE FOR CONVENTIONAL CONSTRUCTION.

2.1.2. THE SECOND STAGE WILL CONSIST OF ROUTINE CONSTRUCTION INVOLVING DEMOLITION, PAVING, LANDSCAPING AND UTILITIES.

2.1.3. THERE ARE GENERAL PHASES OF CONSTRUCTION AS IDENTIFIED BELOW. IN EACH PHASE OF CONSTRUCTION, IMPLEMENT STANDARD EROSION AND SEDIMENT CONTROL PRACTICES PRIOR TO INITIATING EARTH DISTURBING ACTIVITIES, AND MAINTAIN THESE PRACTICES THROUGHOUT THE COURSE OF CONSTRUCTION.

TYPICAL PRACTICES TO BE APPLIED TO THE SITE INCLUDE THE FOLLOWING:

PRIOR TO DEMOLITION AND EARTH DISTURBANCE IN ANY WORK AREA, INSTALL SILTATION BARRIERS (BALES OR SILT FENCE WITH BALES) BETWEEN THE WORK AREA AND THE AREA(S) TO WHICH IT DRAINS.

DISCHARGE WATER FROM DEWATERING OPERATIONS TO A TEMPORARY SILTATION TRAP OR SEDIMENTATION BASIN.

PROVIDE TEMPORARY BERMS AND SWALES TO DIVERT SURFACE WATER AWAY FROM THE AREAS THAT WILL BE EXPOSED BY CONSTRUCTION ACTIVITY TO MINIMIZE THE AMOUNT OF SURFACE WATER COMING INTO CONTACT WITH EXPOSED SOILS. PROVIDE STABLE OUTLETS FOR THESE DEVICES, AND LINE OR VEGETATE THESE DIVERSIONS TO PROVIDE FOR DEVICES, AND LINE OR VEGETATE THESE DIVERSIONS TO PROVIDE FOR THEIR STABILITY DURING CONSTRUCTION.

LIMIT THE EXTENT OF EXPOSED SOILS TO AREAS THAT CAN BE WORKED AND RESTABILIZED WITHIN THE CONSTRUCTION SEASON AND DURING THE SPECIFIC CONSTRUCTION PHASE. WHEN EARTHWORK CONSTRUCTION ACTIVITY IN AN AREA IS COMPLETE, STABILIZE THE AREA WITH A SUITABLE SURFACE AS DESCRIBED BELOW.

IN ADDITION TO THESE PRACTICES, FOLLOW THE SPECIAL PRACTICES DESCRIBED BELOW. COMPLY WITH THE DIRECTIONS OF THE OWNER'S REPRESENTATIVE TO ADDRESS EROSION AND SEDIMENTATION CONDITIONS THAT MAY ARISE ON A CASE BY CASE BASIS DURING CONSTRUCTION.

THE FOLLOWING IS A DESCRIPTION OF MINIMUM CONSTRUCTION REQUIREMENTS AND DOES NOT RELIEVE THE CONTRACTOR OF HIS RESPONSIBILITIES WITH REGARD TO DETERMINING THE ADEQUACY OF MEANS AND METHODS OF CONSTRUCTION.

2.2 ESTIMATED CONSTRUCTION SEQUENCING

THE FOLLOWING IS AN ESTIMATED CONSTRUCTION SEQUENCING. SOME ACTIVITIES MAY OCCUR AT THE SAME TIME RATHER THAN AT SEPARATE TIMES OR OUT OF SEQUENCE DUE TO ACTUAL FIELD CONDITIONS OR OTHER FACTORS. ACTUAL SCHEDULING WILL BE COMPLETED BY THE SITE CONTRACTOR.

(CONTRACTOR TO FOLLOW ANY ADDITIONAL PERMIT REQUIREMENTS OR STEPS AT NO ADDITIONAL COST TO THE OWNERS FROM EITHER STATE OR LOCAL PERMITS, THIS INCLUDES BUT IS NOT LIMITED TO THE ORDER OF CONDITIONS FROM THE BOXBOROUGH CONSERVATION COMMISSION)

- INSTALL ALL EROSION CONTROL MEASURES INCLUDING BUT NOT LIMITED TO TEMPORARY STRAW BALE FILTERS, SILT SACKS, CONSTRUCTION ENTRANCES, AND STRAWBALES AND SILT FENCE.
- SETUP STAGING AND MATERIAL STORAGE / STOCKPILE AREAS.
- IF REQUIRED, CONSTRUCT TEMPORARY SILT / DEWATERING BASINS.
- PROTECT AND MARK ALL EXISTING ITEMS NOTED TO REMAIN INCLUDING BUT NOT LIMITED TO EXISTING ONSITE GROUNDWATER TREATMENT EQUIPMENT.
- PERFORM DEMOLITION WORK. SURVEY AND IDENTIFY LIMITS OF SITE CLEARING. CONDUCT SITE CLEARING.
- PULVERIZE EXISTING PAVEMENT AND DEMO EXISTING MATERIALS AS NOTED.
- REMOVE EXISTING LOAM AND SUBSOIL AND STOCKPILE FOR REUSE.
- CONSTRUCT WETLANDS REPLICATION AREA & STORMWATER HEADWALL & OUTLET
- PERFORM ROUGH GRADING AND CONSTRUCT BUILDING FOUNDATIONS.
- INSTALL UNDERGROUND UTILITIES.
- PERFORM FINE GRADING; PLACE BINDER PAVEMENT COURSE.
- PLACE PAVEMENT TOP COURSE; CONSTRUCT SIDEWALKS AND ALL OTHER SITE IMPROVEMENTS.
- INSTALL PAVEMENT MARKING, SITE SIGNAGE & COMPLETE LANDSCAPING.
- REMOVE TEMPORARY SILT CONTROLS AFTER ONCE GIVEN APPROVAL BY BOXBOROUGH CONSERVATION COMMISSION AND SITE IS STABILIZED.

OPERATION AND MAINTENANCE CONSTRUCTION ACTIVITIES:

1. CONTACT THE BOXBOROUGH CONSERVATION COMMISSION AGENT AT LEAST THREE (3) DAYS PRIOR TO START OF CONSTRUCTION.
2. INSTALL STRAWBALES AND SILT FENCE AS SHOWN ON THE EROSION CONTROL PLAN. INSTALL CONSTRUCTION FENCING IF DETERMINED TO BE NECESSARY AT THE COMMENCEMENT OF CONSTRUCTION.
3. INSTALL THE CONSTRUCTION ENTRANCES AT THE LOCATIONS SHOWN ON THE EROSION AND CONTROL PLAN.
4. SITE ACCESS SHALL BE ACHIEVED ONLY FROM THE DESIGNATED CONSTRUCTION ENTRANCES.
5. STOCKPILES SHALL BE STABILIZED WITH EROSION CONTROL MATTING OR TEMPORARY SEEDING WHENEVER PRACTICABLE, BUT IN NO CASE MORE THAN 14 DAYS AFTER THE CONSTRUCTION ACTIVITY IN THAT PORTION OF THE SITE HAS TEMPORARILY OR PERMANENTLY CEASED.
6. INSTALL SILT SACKS AND STRAWBALES AROUND EACH DRAIN INLET AS SOON AS PRACTICABLE.
7. ALL EROSION CONTROL MEASURES SHALL BE INSPECTED WEEKLY AND AFTER EVERY RAINFALL EVENT.
8. ALL EROSION CONTROL MEASURES SHALL BE MAINTAINED, REPAIRED OR REPLACED AS REQUIRED OR AT THE DIRECTION OF THE OWNER'S ENGINEER, THE TOWN ENGINEER, OR THE TOWN CONSERVATION AGENT.
9. SEDIMENT ACCUMULATION UP-GRADIENT OF THE STRAWBALES AND SILT FENCE GREATER THAN 6" IN DEPTH SHALL BE REMOVED AND DISPOSED OF IN ACCORDANCE WITH ALL APPLICABLE REGULATIONS.
10. IF IT APPEARS THAT SEDIMENT IS EXITING THE SITE, SILT SACKS SHALL BE INSTALLED IN ALL CATCH BASINS ADJACENT TO THE SITE. SEDIMENT ACCUMULATION ON ALL ADJACENT CATCH BASIN INLETS SHALL BE REMOVED AND THE SILT SACK REPLACED IF TORN OR DAMAGED.
11. INSTALL STONE OR DIVERSION SWALE STRAW BALE CHECK DAMS ON SITE AS REQUIRED DURING CONSTRUCTION. REFER TO THE EROSION CONTROL DRAWING, DETAIL SHEETS D-1 THRU D-9.
12. THE CONTRACTOR SHALL COMPLY WITH THE GENERAL AND EROSION NOTES AS SHOWN ON THE SITE DEVELOPMENT PLANS AND SPECIFICATIONS.
13. THE STABILIZED CONSTRUCTION ENTRANCES SHALL BE INSPECTED WEEKLY. THE ENTRANCES SHALL BE MAINTAINED BY ADDING ADDITIONAL CLEAN, ANGULAR, DURABLE STONE TO REMOVE THE SOIL FROM THE CONSTRUCTION VEHICLE TIRES WHEN EXITING THE SITE. IF SOIL IS STILL LEAVING THE SITE VIA THE CONSTRUCTION VEHICLE TIRES, ADJACENT ROADWAYS SHALL BE KEPT CLEAN BY STREET SWEEPING.
14. DUST POLLUTION SHALL BE CONTROLLED USING ON-SITE WATER TRUCKS AND OR AN APPROVED SOIL STABILIZATION PRODUCT.
15. CARE SHOULD BE TAKEN TO PREVENT DISCHARGE OF SEDIMENT TO ABUTTERS.

2.3 MAINTENANCE

2.3.1 DURING THE PERIOD OF CONSTRUCTION AND/OR UNTIL LONG TERM VEGETATION IS ESTABLISHED: SEEDED AREAS WILL BE FERTILIZED AND RESEEDED AS NECESSARY TO INSURE VEGETATION ESTABLISHMENT.

2.3.2 TEMPORARY SEDIMENTATION BASINS WILL BE CHECKED AFTER EACH SIGNIFICANT RAINFALL AND NO LESS THAN WEEKLY, AND CLEANED AS NEEDED TO RETAIN STORAGE CAPACITY.

2.3.3 TEMPORARY DRAINAGE SWALES WILL BE CHECKED WEEKLY AND REPAIRED WHEN NECESSARY.

2.3.4 THE STRAW BALE AND SILTATION FENCING BARRIERS AND OTHER EROSION AND SEDIMENT CONTROL MEASURES/DEVICES SHALL BE INSPECTED, CLEANED, REPLACED AND/OR REPAIRED AS NECESSARY, AND NO LESS THAN WEEKLY, AND AFTER EACH SIGNIFICANT RAINFALL. ACCUMULATED SEDIMENTS SHALL BE REMOVED WHEN THEY REACH HALF THE HEIGHT OF THE BARRIER.

2.4. GENERAL

2.4.1. ALL EROSION AND SEDIMENTATION CONTROL MEASURES SHALL BE CONSTRUCTED IN ACCORDANCE WITH (USDA) NATURAL RESOURCES CONSERVATION SERVICE (NRCS, FORMERLY SCS) GUIDELINES AND ALL LOCAL MUNICIPAL REGULATIONS.

2.4.2. THE CONTRACTOR SHALL BE RESPONSIBLE FOR ESTABLISHING AND MAINTAINING ALL CONTROL POINTS AND BENCH MARKS NECESSARY FOR THE WORK.

2.4.3. EROSION AND SEDIMENTATION CONTROL MEASURES SHALL BE IN PLACE PRIOR TO THE COMMENCEMENT OF ANY SITEWORK OR EARTHWORK OPERATIONS, SHALL BE MAINTAINED DURING CONSTRUCTION, AND SHALL REMAIN IN PLACE UNTIL ALL SITEWORK IS COMPLETE AND GROUNDCOVER IS ESTABLISHED.

2.4.4. ALL WORK SHALL BE IN ACCORDANCE WITH THE PERMITS AND APPROVALS ISSUED BY THE LOCAL PLANNING BOARD, THEIR AGENTS, AND THE CONSTRUCTION SPECIFICATIONS.

2.4.5. STOCKPILES SHALL BE SURROUNDED ON THEIR PERIMETERS WITH STAKED BALES AND/OR SILTATION FENCES TO PREVENT AND/OR CONTROL SILTATION AND EROSION.

2.4.6. TOPS OF STOCKPILES SHALL BE COVERED IN SUCH A MANNER THAT STORMWATER DOES NOT INFILTRATE THE MATERIALS AND THEREBY RENDER THE SAME UNSUITABLE FOR FILL USE.

IF APPLICABLE, EFFORTS SHALL BE MADE TO AVOID STOCKPILING CUT GLACIAL TILL SOILS SINCE STOCKPILING INCREASES EXPOSURE TO PRECIPITATION AND PROVIDES GREATER OPPORTUNITY FOR FROST PENETRATION. SOME OF THE STEPS IN SEQUENCING MAY OCCUR SIMULTANEOUSLY, PARTICULARLY CUT AND FILL OPERATIONS, IN AN EFFORT TO AVOID STOCKPILING.

2.4.7. ALL DISTURBED OR EXPOSED AREAS SUBJECT TO EROSION SHALL BE STABILIZED WITH MULCH OR SEEDED FOR TEMPORARY VEGETATIVE COVER. NO AREA, SUBJECT TO EROSION SHALL BE LEFT DISTURBED AND UNSTABILIZED FOR PERIODS LONGER THAN IS ABSOLUTELY NECESSARY TO CARRY OUT THAT PORTION OF THE CONSTRUCTION WORK.

2.4.8. THE LOCATION OF TEMPORARY DRAINAGE SWALES AND SEDIMENTATION TRAPS ARE APPROXIMATE ONLY AND SHALL BE RELOCATED AS REQUIRED AS CONSTRUCTION PROGRESSES.

2.4.9. BALE DIKES SHALL BE CONSTRUCTED AT ALL EXISTING & PROPOSED CATCH BASINS LOCATED IN AREAS SUBJECT TO STORMWATER RUN-OFF FROM PROPOSED CONSTRUCTION, OR AS DIRECTED BY THE OWNER'S REPRESENTATIVE. NO SEDIMENTS SHALL ENTER THE OFF-SITE DRAINAGE SYSTEMS AT ANY TIME. SEDIMENT DISCHARGE TO OFF-SITE PROPERTY IS PROHIBITED.

2.4.10. CULVERT/PIPE INLETS AND OUTFALLS SHALL BE PROTECTED FROM INCOMING SILT UNTIL ALL DISTURBED AREAS TRIBUTARY TO THEM ARE PERMANENTLY STABILIZED.

2.4.11. ANY DEWATERING REQUIRED DURING CONSTRUCTING ON THE SITE SHALL DISCHARGE INTO A DEWATERING FILTER OR THE TEMPORARY SILT BASIN PRIOR TO DISCHARGE TO THE EXISTING DETENTION BASIN OR TO OFF-SITE .

2.4.12. BALES AND SILTATION FENCING AND TEMPORARY SILT BASIN SHALL BE INSPECTED NO LESS THAN WEEKLY AND AFTER EACH SIGNIFICANT RAINFALL AND REPLACED AS REQUIRED.

2.4.13. ALL PROPOSED NON-RIPRAP SLOPES STEEPER THAN 3:1 SHALL BE STABILIZED WITH EROSION CONTROL FABRIC AND PROTECTED FROM EROSION.

2.4.14. THE CONTRACTOR SHALL KEEP ON SITE AT ALL TIMES ADDITIONAL BALES AND EXTRA SILTATION FENCING FOR INSTALLATION AT THE DIRECTION OF THE OWNER'S REPRESENTATIVE OR THE MUNICIPAL AGENTS TO MITIGATE ANY EMERGENCY CONDITION.

2.4.15. BORINGS WERE TAKEN FOR THE PURPOSE OF DESIGN AND SHOW CONDITIONS AT BORING POINTS ONLY. THEY DO NOT NECESSARILY SHOW THE NATURE OF ALL MATERIALS TO BE ENCOUNTERED DURING CONSTRUCTION.

2.4.16. THE CONTRACTOR IS RESPONSIBLE FOR OBTAINING AND PAYING FOR ANY PERMITS AND/OR CONNECTION FEES REQUIRED TO CARRY OUT THE WORK INCLUDING BUT NOT LIMITED TO DEMOLITION.

2.4.17. DISPOSAL OF ALL DEMOLISHED MATERIALS IS THE RESPONSIBILITY OF THE CONTRACTOR AND MUST BE OFF-SITE IN ACCORDANCE WITH ALL FEDERAL, STATE, AND LOCAL MUNICIPAL REQUIREMENTS.

2.4.18. THE CONTRACTOR SHALL PROTECT AND/OR CAP OFF ALL EXISTING ON- SITE UTILITY SERVICES DESIGNATED ON THESE DRAWINGS. SERVICES SHALL BE CAPPED OFF WHERE SAME ENTER THE PERIMETER PROPERTY LINE.

2.4.19. THE LIMIT OF WORK LINE FOR THE AREA TO BE CLEARED AND GRUBBED SHALL BE THE SAME AS THE LIMIT OF WORK LINE NECESSARY FOR GRADING PURPOSES, (I.E., THE GRADING LIMITS AROUND THE PERIMETER OF THE PROJECT AREA).

2.4.20. THE AREA OR AREAS OF ENTRANCE AND EXIT TO AND FROM THE SITE SHALL BE MAINTAINED IN A CONDITION WHICH WILL PREVENT TRACKING OR FLOWING OF SEDIMENT ONTO PUBLIC RIGHTS-OF-WAY. ALL SEDIMENT SPILLED, DROPPED, WASHED OR TRACKED ONTO PUBLIC RIGHT-OF-WAY MUST BE REMOVED IMMEDIATELY.

2.4.21. FOLLOWING THE ADDITION OF A BINDER COURSE, THE CONTRACTOR SHALL SWEEP ALL ON-SITE PAVEMENT, IF NECESSARY, UNTIL ALL SITE CONSTRUCTION IS COMPLETED.

N:\PROJECTS\2075-01\CIVIL\DRAWINGS\CURRENT\2075-01 - ABBREVIATIONS & NOTES.DWG

JPI

WAIVERS OF TOWN OF BOXBOROUGH ZONING BYLAWS:
4.4003(1) USE REGULATION SCHEDULE
WAIVER TO PERMIT SINGLE-FAMILY AND MULTI-FAMILY ATTACHED RESIDENTIAL USES NOT OTHERWISE PERMITTED IN THE INDUSTRIAL COMMERCIAL DISTRICT (I.E., THE PROPOSED TWO (2) SINGLE FAMILY DWELLINGS AND THE PROPOSED 244 APARTMENT UNITS IN ELEVEN (11) MULTI-FAMILY BUILDINGS, FOR A TOTAL OF 246 UNITS)
4.4033 USE REGULATION SCHEDULE
WAIVER TO PERMIT A USE WHICH IS NOT OTHERWISE ACCESSORY TO INDUSTRIAL-COMMERCIAL USES, I.E., A CLUBHOUSE/RENTAL OFFICE.
5.5002 DIMENSIONAL SCHEDULE
WAIVER OF REQUIREMENT FOR A MAXIMUM FLOOR AREA RATIO OF 0.10.
6.6004 SURFACE, CIRCULATION, AND LANDSCAPING REQUIREMENTS
WAIVER OF REQUIREMENT THAT AUTOMOBILE PARKING SPACES SHALL NOT BE LESS THAN 10 FEET BY 20 FEET, IN ORDER TO ALLOW PARKING SPACE OF 9 FEET BY 18 FEET.
6.6103 MULTIPLE BUILDINGS ON ONE LOT
WAIVER OF REQUIREMENT THAT WHERE MORE THAN ONE BUILDING IS PROPOSED TO BE BUILT UPON A LOT, THE PLAN SHALL BE REVIEWED BY THE PLANNING BOARD REGARDING ADEQUACY OF ACCESS TO BUILDINGS, IN ORDER TO SUBSTITUTE THE PERMISSION FROM THE ZONING BOARD OF APPEALS GRANTED UNDER THIS COMPREHENSIVE PERMIT.
6.6105 PRIVATE/COMMON DRIVEWAYS IN THE BUSINESS, BUSINESS 1, OFFICE PARK, TOWN CENTER, AND INDUSTRIAL-COMMERCIAL DISTRICTS
WAIVER OF THE REQUIREMENT THAT PRIVATE/COMMON DRIVEWAYS ARE ALLOWED IN THE IC DISTRICT ONLY BY SPECIAL PERMIT OF THE PLANNING BOARD, IN ORDER TO SUBSTITUTE THE PERMISSION FROM THE ZONING BOARD OF APPEALS UNDER THIS COMPREHENSIVE PERMIT.
7.7004(G) SPECIAL REGULATIONS AQUIFER PROTECTION DISTRICT
WAIVER OF REQUIREMENT THAT THERE BE NO DISPOSAL OF SANITARY WASTE TO A SUBSURFACE DISPOSAL SYSTEM IN QUANTITIES EXCEEDING 440 GALLONS PER DAY PER ACRE OF AQUIFER PROTECTION DISTRICT CONTAINED WITHIN THE LOT, IN ORDER TO ALLOW QUANTITIES OF UP TO 750 GALLONS PER DAY PER ACRE OF THE SITE IN THE AQUIFER PROTECTION DISTRICT IN THE EVENT RESERVE LEACHING FIELDS ARE USED.
7.7007(1) DESIGN REQUIREMENTS
WAIVER OF REQUIREMENT THAT WHERE A PORTION OF THE SITE IS LOCATED OUTSIDE OF THE AQUIFER PROTECTION DISTRICT, POTENTIAL POLLUTION SOURCES, SUCH AS ON SITE DISPOSAL SYSTEMS, SHOULD BE LOCATED OUTSIDE THE DISTRICT BOUNDARIES, IN ORDER TO ALLOW RESERVE LEACHING FIELD TO BE LOCATED WITHIN THE AQUIFER PROTECTION DISTRICT.
7.7104(G) AND (H) W-DISTRICT USE REGULATIONS
WAIVER OF REQUIREMENTS FOR SPECIAL PERMIT FOR USE IN THE W-DISTRICT, IN ORDER TO SUBSTITUTE APPROVAL UNDER THIS COMPREHENSIVE PERMIT.
7.7106 SUBMITTALS
WAIVER OF REQUIREMENTS FOR SPECIAL PERMIT APPLICATIONS TO BE PREPARED AND SUBMITTED TO THE BOARD OF APPEALS, IN ORDER TO PERMIT ONE COMPREHENSIVE SUBMISSION TO THE BOARD TO BE ACTED ON UNDER G.L. C. 40B, §21.
7.7109 PROCEDURES
WAIVER OF REQUIREMENT FOR SPECIAL PERMIT APPLICATIONS TO BE PREPARED AND SUBMITTED TO THE BOARD OF APPEALS IN ORDER TO PERMIT A SINGLE COMPREHENSIVE PERMIT SUBMISSION TO THE BOARD TO BE ACTED UPON UNDER G.L. C.40B, §21.
7.7200 LANDS BORDERING THE W-DISTRICT
WAIVER OF REQUIREMENT FOR SPECIAL PERMIT TO PLACE STRUCTURES WITHIN ONE HUNDRED (100') FEET OF THE W-DISTRICT, IN ORDER TO PERMIT CONSTRUCTION OF WARD ROAD AND A FIRE POND WITHIN 100' OF W-DISTRICT.
8.8000 SITE PLAN APPROVAL & DESIGN REVIEW
WAIVER OF REQUIREMENT FOR SITE PLAN REVIEW BY THE PLANNING BOARD FOR THE CONSTRUCTION OF MULTI-FAMILY STRUCTURES AND PARKING AREAS ASSOCIATED WITH MULTI-FAMILY STRUCTURES.
9.9001(2) BUILDING PERMITS
WAIVER OF REQUIREMENT THAT NO BUILDING PERMIT SHALL BE ISSUED BY THE INSPECTOR OF BUILDINGS WITHOUT THE WRITTEN APPROVAL OF A SITE PLAN BY THE PLANNING BOARD.

WAIVERS FROM TOWN OF BOXBOROUGH REGULATIONS FOR THE WETLAND BYLAW:
SECTION 2.5.3.1 PERFORMANCE STANDARDS
WAIVER OF PROHIBITION OF PARKING LOTS, PERMANENT STRUCTURES, AND SANITARY WASTE DISPOSAL SYSTEMS WITHIN ADJACENT LAND RESOURCE AREA, IN ORDER TO ALLOW THE PLACEMENT OF THE PROPOSED SANITARY WASTE DISPOSAL SYSTEM, PARKING LOT, ROAD AND OTHER PERMANENT STRUCTURES WITHIN THE ADJACENT LAND RESOURCE AREA IN ACCORDANCE WITH THE SITE PLAN APPROVED FOR THE PROJECT UNDER THIS COMPREHENSIVE PERMIT.

WAIVERS FROM BOXBOROUGH COMPREHENSIVE PERMIT RULES OF THE ZONING BOARD OF APPEALS:
SECTION 3.02(I) LIST OF REQUESTED EXCEPTIONS
WAIVER OF REQUIREMENT THAT APPLICANT PROVIDES A COMPLETE LIST OF ALL REQUESTED EXCEPTIONS AT THE TIME OF THE INITIAL FILING OF THE APPLICATION IN ORDER TO PERMIT THE LIST TO BE REVISED AS THE PROJECT EVOLVES THROUGH THE HEARING AND APPROVAL PROCESS.

COMMONWEALTH OF MASSACHUSETTS
TIMOTHY J. WILLIAMS
CIVIL
No.43119
REGISTERED PROFESSIONAL ENGINEER
7/8/15

PROFESSIONAL ENGINEER FOR
ALLEN & MAJOR ASSOCIATES, INC.

REV	DATE	DESCRIPTION
9.	07/08/2015	ISSUED FOR DEFINITIVE SITE PLAN
8.	06/12/2015	REVISED PER FIRE DEPARTMENT COMMENTS
7.	05/15/2015	ISSUED FOR PERMIT
6.	05/05/2015	ISSUED FOR DEP PERMIT APPROVAL
5.	05/04/2015	REVISED FOR PRICING
4.	03/26/2015	REVISED PER TOWN COMMENTS
3.	03/02/2015	ISSUED FOR MEPA
2.	02/27/2015	REVISED PER TOWN COMMENTS
1.	02/12/2015	ISSUED FOR ZONING BOARD OF APPEALS

APPLICANT:

JPI
3 WEST MAIN STREET, SUITE 203
IRVINGTON, NY 10533

PROJECT:

DEFINITIVE SITE PLAN SET
JEFFERSON AT BEAVER BROOK
BOXBOROUGH, MA

PROJECT NO.	2075-01	DATE:	02-11-2015
SCALE:	AS NOTED	DWG. NAME:	C2075-10
DESIGNED BY:	SJL	CHECKED BY:	CMQ

PREPARED BY:

ALLEN & MAJOR ASSOCIATES, INC.
civil & structural engineering ◆ land surveying
environmental consulting ◆ landscape architecture
www.allenmajor.com
100 COMMERCE WAY
P.O. BOX 2118
WOBURN MA 01888-0118
TEL: (781) 935-6889
FAX: (781) 935-2896
WOBURN, MA ◆ LAKEVILLE, MA ◆ MANCHESTER, NH

THIS DRAWING HAS BEEN PREPARED IN ELECTRONIC FORMAT. CLIENT/CLIENT'S REPRESENTATIVE OR CONSULTANT MAY BE PROVIDED COPIES OF DRAWINGS AND SPECIFICATIONS ON MAGNETIC MEDIA FOR HIS/HER INFORMATION AND USE FOR SPECIFIC APPLICATION TO THIS PROJECT. DUE TO THE POTENTIAL THAT THE MAGNETIC INFORMATION MAY BE MODIFIED UNINTENTIONALLY OR OTHERWISE, ALLEN & MAJOR ASSOCIATES, INC. MAY REMOVE ALL INDICATION OF THE DOCUMENT'S AUTHORSHIP ON THE MAGNETIC MEDIA. PRINTED REPRESENTATIONS OF THE DRAWINGS AND SPECIFICATIONS ISSUED SHALL BE THE ONLY RECORD COPIES OF ALLEN & MAJOR ASSOCIATES, INC.'S WORK PRODUCT.

DRAWING TITLE: ABBREVIATIONS & NOTES

SHEET No. ABB-2

Copyright©2015 Allen & Major Associates, Inc. All Rights Reserved

TOWN OF BOXBOROUGH BOARD OF APPEALS COMPREHENSIVE PERMIT: DATED 3/3/2015

A. GENERAL AND PRE-CONSTRUCTION CONDITIONS

1. THE PROJECT SHALL BE CONSISTENT WITH THE PLANS ENTITLED: "SITE DEVELOPMENT PLANS FOR MULTI-FAMILY DEVELOPMENT, JEFFERSON AT BEAVER BROOK, BOXBOROUGH, MA, REVISED PER TOWN COMMENTS" DATED FEBRUARY 27, 2015 BY ALLEN & MAJOR ASSOCIATES, INC. CONSISTING OF 24 SHEETS (THE "SITE PLAN DRAWINGS"). AS USED HEREIN THE TERM SITE PLAN DRAWINGS WILL MEAN THE MODIFIED SITE PLAN DRAWINGS THAT WERE SUBMITTED AND RECEIVED BY THE BOARD ON MARCH 2, 2015.

2. NOT LESS THAN FORTY FIVE (45) DAYS PRIOR TO THE ANTICIPATED DATE OF COMMENCEMENT OF CONSTRUCTION ON THE SITE, INCLUDING BUT NOT LIMITED TO ANY CLEARING OF VEGETATION AND EXCAVATION OF EARTH MATERIALS OTHER THAN IN CONNECTION WITH SITE INVESTIGATIONS AND SURVEYS NEEDED TO PREPARE THE DEFINITIVE SITE PLAN, THE APPLICANT SHALL DELIVER TO THE BOARD 15 COMPLETE SETS OF A DEFINITIVE SITE PLAN FOR THE PROJECT AND ALL SUPPORTING EXPLANATORY MATERIALS, INCLUDING BUT NOT LIMITED TO DETAILED LANDSCAPING PLANS AND DRAINAGE CALCULATIONS (THE "DEFINITIVE SITE PLAN SUBMISSION"). ALL PLAN REVISIONS REQUIRED BY THIS DECISION SHALL BE INCORPORATED INTO THE PLANS WHICH SHALL BE SUBMITTED UNDER THIS CONDITION. SIMULTANEOUSLY WITH SUCH DELIVERY TO THE BOARD, THE APPLICANT SHALL PROVIDE A COMPLETE COPY OF THE DEFINITIVE SITE PLAN SUBMISSION TO THE BOARD'S CONSULTING ENGINEER FOR PURPOSES OF THE REVIEW REQUIRED IN CONDITION #A9.

3. THE DEFINITIVE SITE PLAN SUBMISSION SHALL BE EQUIVALENT TO CONSTRUCTION LEVEL DOCUMENTS AND OF A QUALITY AND LEVEL OF DETAIL SUFFICIENT TO ALLOW FOR REVIEW OF THE PLANS FOR COMPLIANCE WITH THIS COMPREHENSIVE PERMIT AND ALL APPLICABLE LAW, AND SHALL PROVIDE, AS A MINIMUM, THE INFORMATION AND LEVEL OF DETAIL REQUIRED UNDER THE BOXBOROUGH ZONING BYLAW FOR SITE PLAN APPROVAL APPLICATIONS.

4. AS PART OF THE DEFINITIVE SITE PLAN SUBMISSION, THE APPLICANT SHALL PROVIDE DETAILED LIGHTING CUT-SHEET(S) FOR ALL EXTERIOR LIGHT FIXTURES TO VERIFY CONFORMANCE WITH SECTION 6204 OF THE ZONING BYLAW. ALL LIGHTING FOR THE PROJECT SHALL BE INSTALLED AND MAINTAINED IN SUCH A WAY THAT LIGHTS SHALL BE SHIELDED AND DIRECTED SO AS TO AVOID THE DIRECT EMISSION OF LIGHT ONTO NEARBY PROPERTIES.

5. AS PART OF THE DEFINITIVE SITE PLAN SUBMISSION, THE APPLICANT SHALL PROVIDE A STORM WATER POLLUTION PREVENTION PLAN ("PREVENTION PLAN") THAT ADDRESSES THE CONTROL OF RUNOFF AND SEDIMENT DURING CONSTRUCTION. THIS PREVENTION PLAN SHALL DETAIL SEDIMENT CONTROLS TO BE USED THROUGHOUT EACH PHASE OF THE CONSTRUCTION SEQUENCE. THE PREVENTION PLAN SHALL INCLUDE THE LOCATION OF STOCKPILING AREAS, TEMPORARY STABILIZATION OF STOCKPILED MATERIALS, DE-WATERING METHODS AND SPECIFICATIONS, PROCEDURES TO MONITOR FOR AND MANAGE CONTAMINATED SOIL IF DETECTED, MEASURES TO TEMPORARILY STABILIZE EXPOSED SURFACES, AND A CONTINGENCY PLAN IN THE EVENT THAT ANY CONTAMINATION IS ENCOUNTERED ON THE SITE. THE PREVENTION PLAN SHALL REFLECT THE INSTALLATION AND MAINTENANCE OF A STONE APRON CONSISTING OF 6" OR 20 POUND STONES WITH AN APRON AT LEAST 30' WIDE AND 50' IN LENGTH, TO BE USED THROUGHOUT ALL CONSTRUCTION PHASES BETWEEN ALL WORK AREAS AND PAVED AREAS. SEDIMENT TRACKED ONTO PAVED AREAS INCLUDING THE INTERNAL ACCESS DRIVE AND MASSACHUSETTS AVENUE SHALL BE SWEPT AT THE CONCLUSION OF EACH CONSTRUCTION DAY, UNTIL ALL WORK AREAS HAVE BEEN PROPERLY STABILIZED.

6. THE DEFINITIVE SITE PLAN SUBMISSION SHALL SHOW THE LIMIT OF WORK LINE. ALSO, AS PART OF THE DEFINITIVE SITE PLAN SUBMISSION, THE APPLICANT SHALL SUBMIT TO THE BOARD FOR APPROVAL A TREE PROTECTION PLAN, CONSISTENT WITH THE LIMIT OF WORK LINE, THAT IDENTIFIES ANY TREES TO REMAIN AND TREE PROTECTION MEASURES TO BE TAKEN TO INSURE THAT TREES ARE NOT INJURED OR DAMAGED DURING CONSTRUCTION. ANY TREE SCHEDULED TO REMAIN THAT IS REMOVED OR SIGNIFICANTLY DAMAGED SHALL BE REPLACED AT A 2:1 RATIO (MINIMUM 3-INCH CALIPER).

7. THE DEFINITIVE SITE PLAN SUBMISSION SHALL SHOW BICYCLE RACKS IN AT LEAST SIX (6) LOCATIONS ON THE SITE. THE TYPE OF BICYCLE RACK AND LOCATION SHALL BE SUBJECT TO REVIEW AND APPROVAL BY THE TOWN PLANNER.

8. THE DEFINITIVE SITE PLAN SUBMISSION SHALL DESIGNATE THE SEPTIC FIELD RESERVE AREA WITHIN THE "RECHARGE AREA" AT THE WESTERLY SIDE OF THE SITE.

9. EXCEPT AS PROVIDED IN CONDITION A.2, NO CONSTRUCTION ACTIVITY SHALL COMMENCE AND NO BUILDING PERMITS SHALL BE ISSUED FOR THE PROJECT UNTIL THE BOARD, AFTER CONSULTATION WITH THE PLANNING DEPARTMENT AND THE BOARD'S CONSULTING ENGINEER, HAS VERIFIED THAT THE DEFINITIVE SITE PLAN SUBMISSION IS IN CONFORMANCE WITH THIS COMPREHENSIVE PERMIT AND HAS SO ENDORSED THE FINAL SITE PLAN. SUCH ENDORSEMENT IS EXPECTED TO OCCUR WITHIN FORTY-FIVE (45) DAYS UNLESS THERE IS A NEED FOR MATERIAL REVISIONS TO THE SUBMISSION. THE ENDORSED DEFINITIVE SITE PLAN (THE "FINAL SITE PLAN") SHALL BE DEEMED TO BE INCORPORATED IN, AND MADE PART OF, THIS DECISION.

10. THE APPLICANT SHALL RECORD THIS COMPREHENSIVE PERMIT, TOGETHER WITH THE FINAL SITE PLAN, IN THE MIDDLESEX SOUTH REGISTRY OF DEEDS AND SHALL MAINTAIN COPIES OF THE RECORDED FINAL SITE PLAN AND COMPREHENSIVE PERMIT AT THE SITE AT ALL TIMES DURING CONSTRUCTION.

11. PRIOR TO THE ISSUANCE OF ANY BUILDING PERMITS FOR THE PROJECT, THE APPLICANT SHALL DELIVER TO TOWN COUNSEL AN EXECUTED AND ACKNOWLEDGED DECLARATION OF RESTRICTIVE COVENANTS RESTRICTING THE USE OF THE OPEN SPACE AND CREATING A TRAIL EASEMENT SUBSTANTIALLY AS SHOWN ON EXHIBIT G, TOGETHER WITH A RECORDABLE PLAN DESCRIBING THE AREAS TO BE SUBJECT TO SUCH DECLARATION OF RESTRICTIVE COVENANT, ALL IN A FORM REASONABLY ACCEPTABLE TO TOWN COUNSEL.

12. PRIOR TO THE ISSUANCE OF ANY BUILDING PERMITS FOR THE PROJECT, THE APPLICANT SHALL SUBMIT TO THE BUILDING INSPECTOR A COPY OF THE RECORDED COMPREHENSIVE PERMIT DECISION.

13. PRIOR TO COMMENCING ANY CONSTRUCTION ON THE SITE, THE APPLICANT SHALL BE RESPONSIBLE FOR OBTAINING ANY ORDER OF CONDITIONS WHICH MAY BE REQUIRED UNDER THE STATE WETLANDS PROTECTION ACT.

14. PRIOR TO THE ISSUANCE OF ANY BUILDING PERMITS FOR THE PROJECT, THE APPLICANT SHALL PROVIDE TO THE BUILDING INSPECTOR A COPY OF THE APPLICANT'S FEDERAL CLEAN WATER ACT NATIONAL POLLUTION DISCHARGE ELIMINATION SYSTEMS (NPDES) PERMIT.

15. PRIOR TO THE ISSUANCE OF ANY BUILDING PERMITS FOR THE PROJECT, THE APPLICANT SHALL SUBMIT TO THE FIRE DEPARTMENT FOR REVIEW AND APPROVAL A FIRE PROTECTION/DETECTION PLAN AND SPRINKLER PLAN. THE PLANS SHALL INCLUDE DETAILED INFORMATION FOR THE FIRE POND, DISTRIBUTION SYSTEM, WATER FLOW DATA AND HYDRANTS.

16. PRIOR TO THE ISSUANCE OF ANY BUILDING PERMITS FOR THE PROJECT, THE APPLICANT SHALL SUBMIT TO THE FIRE DEPARTMENT FOR REVIEW AND APPROVAL THE PROPOSED USE OF AND METHODS FOR BLASTING OF THE SITE IF ANY SUCH BLASTING IS PROPOSED. ANY CONDITIONS IMPOSED ON THE PROJECT AS PART OF THE FIRE DEPARTMENT BLASTING PERMIT SHALL BE STRICTLY FOLLOWED AND ENFORCED. THE USE OF BLASTING MATERIALS CONTAINING PERCHLORATE SHALL BE PROHIBITED.

17. PRIOR TO THE ISSUANCE OF ANY BUILDING PERMIT FOR THE PROJECT AND PRIOR TO COMMENCEMENT OF ANY CONSTRUCTION ON THE SITE, THE APPLICANT SHALL PROVIDE TO THE BOARD AND THE BUILDING INSPECTOR:

(a) THE NAME, ADDRESS AND BUSINESS TELEPHONE NUMBER OF THE INDIVIDUAL WHO WILL BE PRIMARILY RESPONSIBLE FOR ALL CONSTRUCTION ACTIVITIES ON THE SITE;

(b) A COPY OF A MUNICIPAL LIEN CERTIFICATE INDICATING THAT ALL TAXES, ASSESSMENTS AND CHARGES DUE ON THE PREMISES HAVE BEEN PAID;

(c) EVIDENCE THAT THE FINAL SITE PLAN AND THIS COMPREHENSIVE PERMIT HAVE BEEN RECORDED IN THE REGISTRY OF DEEDS;

(d) CONFIRMATION THAT "DIG SAFE" HAS BEEN NOTIFIED AT LEAST 72 HOURS PRIOR TO THE START OF CONSTRUCTION;

(e) EVIDENCE THAT FINAL APPROVAL HAS BEEN ISSUED BY THE SUBSIDIZING AGENCY PURSUANT TO 760 CMR 56.04(7);

ADDITIONALLY, AT LEAST 48 HOUR WRITTEN NOTICE TO THE BUILDING INSPECTOR IS REQUIRED IF CONSTRUCTION ACTIVITY ON THE SITE WILL CEASE FOR LONGER THAN ONE MONTH. 48 HOUR WRITTEN NOTICE SHALL BE REQUIRED PRIOR TO RESTARTING WORK.

18. PRIOR TO THE ISSUANCE OF ANY BUILDING PERMITS FOR THE PROJECT, THE APPLICANT SHALL DEMONSTRATE THAT IT HAS COMPLIED WITH THE PUBLIC WATER SUPPLY TESTING AND MONITORING REQUIREMENTS SET FORTH IN CONDITIONS #A19 THROUGH A29 BELOW.

A. GENERAL AND PRE-CONSTRUCTION CONDITIONS (CONT.)

19. THE APPLICANT SHALL CONDUCT A CONSTANT RATE PUMP TEST ON THE PROPOSED PUBLIC WATER SUPPLY WELL FOR THE PROJECT IN ACCORDANCE WITH DEP GUIDANCE AND REQUIREMENTS APPLICABLE TO THE APPROVAL OF A PUBLIC WATER SUPPLY (THE "PUMP TEST"), AND IN ACCORDANCE WITH THE FURTHER REQUIREMENTS SET FORTH IN CONDITION #A20 THROUGH #A29 BELOW.

20. PRIOR TO PERFORMING THE PUMP TEST, THE APPLICANT SHALL SUBMIT TO THE BOARD FOR ITS APPROVAL A LIST OF UP TO SEVEN (7) PRIVATE WATER SUPPLY WELLS ON DESIGNATED PROPERTIES WITH WELL LOCATIONS, TOGETHER WITH THE NAMES/ADDRESSES OF THE OWNERS OF SAID PROPERTIES, TO BE INCLUDED IN THE WATER LEVEL MONITORING PROGRAM DESCRIBED IN CONDITION #A21 BELOW. THE LIST OF THE DESIGNATED ABUTTING PROPERTIES SHALL BE REVIEWED BY THE TOWN'S CONSULTANT PRIOR TO APPROVAL BY THE BOARD.

21. THE APPLICANT SHALL MAKE EVERY REASONABLE ATTEMPT TO OBTAIN PERMISSION FROM THE OWNERS OF THE DESIGNATED PROPERTIES TO MONITOR WATER LEVELS IN THEIR PRIVATE WATER SUPPLY WELLS. IF ACCESS IS NOT REASONABLY GRANTED BY THE OWNERS OF DESIGNATED PROPERTIES, THE APPLICANT SHALL SUBMIT AN ALTERNATIVE NAME/ADDRESS FOR REVIEW BY THE TOWN'S CONSULTANT AND APPROVAL BY THE BOARD FOR EACH DESIGNATED PROPERTY OWNER THAT DECLINES PERMISSION TO MONITOR THEIR PRIVATE WATER WELL, UP TO A TOTAL OF FOUR (4) ALTERNATES.

22. PRIOR TO PERFORMING THE PUMP TEST, THE APPLICANT SHALL SUBMIT TO THE BOARD COPIES OF THE EXECUTED ENTRY AGREEMENTS FOR EACH OF THE WELLS TO BE MONITORED ON THE DESIGNATED PROPERTIES, CONTAINING, AT A MINIMUM, THE TERMS AND CONDITIONS CONTAINED WITHIN THE FORM OF THE "DRAFT ENTRY AND ESCROW AGREEMENT" ATTACHED HERETO AS EXHIBIT J, PROVIDED, HOWEVER, THAT NOTHING IN THIS CONDITION IS INTENDED TO LIMIT EACH DESIGNATED PROPERTY OWNER FROM NEGOTIATING THEIR OWN ADDITIONAL OR ALTERED TERMS WITH THE APPLICANT SO LONG AS AT LEAST TEN THOUSAND ($10,000.00) DOLLARS IS HELD IN ESCROW FOR EACH "IMPACTED WELL" OWNER, AS DEFINED HEREINAFTER.

23. AS PART OF THE APPLICANT'S PUMP TEST, THE APPLICANT SHALL MONITOR THE WATER LEVEL IN EACH OF THE PRIVATE WATER SUPPLY WELLS ON THE APPROVED LIST OF DESIGNATED PROPERTIES WHERE THE OWNERS HAVE GIVEN THEIR CONSENT TO SUCH WATER LEVEL MONITORING (SAID DESIGNATED ABUTTING PRIVATE WELLS SHALL HEREINAFTER BE REFERRED TO AS "DESIGNATED WELLS" AND THE OWNERS OF THE DESIGNATED WELLS SHALL HEREINAFTER BE REFERRED TO AS "DESIGNATED OWNERS"). AT THE APPLICANT'S EXPENSE, TRANSDUCERS SHALL BE INSTALLED IN THESE DESIGNATED WELLS AND WATER LEVELS RECORDED AT LEAST 5 DAYS PRIOR TO THE PUMP TEST, DURING THE 5-DAY PUMP TEST, AND DURING THE SUBSEQUENT RECOVERY PERIOD. THE APPLICANT SHALL PROVIDE THE BOARD OF HEALTH WITH AMPLE NOTICE AND OPPORTUNITY TO OBSERVE THE PLACEMENT AND REMOVAL OF THE TRANSDUCERS FROM THE DESIGNATED WELLS.

24. THE APPLICANT SHALL PREPARE CALCULATIONS REGARDING THE IMPACT (OR LACK THEREOF) TO THE WATER LEVELS IN THE DESIGNATED WELLS ATTRIBUTABLE TO THE PUMP TEST AT THE PROJECT'S WATER SUPPLY WELL USING THE PROCEDURES AND CRITERIA OUTLINED BELOW:

(a) UTILIZING THE WATER LEVEL DATA FROM THE TRANSDUCERS, THE MAXIMUM SELF-INDUCED DRAWDOWN ("BASELINE SELF-INDUCED DRAWDOWN") IN EACH DESIGNATED WELL SHALL BE CALCULATED TO DETERMINE THE DIFFERENCE BETWEEN THE DEPTH TO THE NON-PUMPING AVERAGE STATIC WATER LEVEL AND THE DEPTH TO THE LOWEST PUMPING WATER LEVEL IN EACH DESIGNATED WELL.

(b) THE 180-DAY PROJECTED TEST-INDUCED DRAWDOWN ("TEST-INDUCED DRAWDOWN") ON EACH DESIGNATED WELL SHALL BE CALCULATED BY CREATING A DRAWDOWN VERSUS LENGTH OF TIME GRAPH OF THE DECLINE IN THE NORMAL STATIC WATER LEVELS (IF CHANGE IS OBSERVED) DUE TO THE PUMPING OF THE PROJECT'S WATER SUPPLY WELL. ALL DATA WILL BE CORRECTED FOR AMBIENT WATER LEVEL TRENDS IN STATIC WATER LEVELS AND BAROMETRIC FLUCTUATIONS AS NECESSARY.

(c) AFTER DETERMINING THE PUMP DEPTH IN EACH DESIGNATED WELL (EITHER BY PUMP INSTALLER RECORDS, BOARD OF HEALTH RECORDS, OR BY PROBING THE WELL) THE TOTAL AVAILABLE WATER COLUMN ("TOTAL AVAILABLE WATER COLUMN") SHALL BE CALCULATED AS THE DIFFERENCE BETWEEN THE DEPTH TO THE NON-PUMPING AVERAGE STATIC WATER LEVEL AND THE DEPTH TO THE WELL PUMP.

THE APPLICANT SHALL SUBMIT ITS CALCULATIONS UNDER PARAGRAPHS (A) THROUGH (C) TO THE BOARD OF HEALTH, WITH COPY TO THE DESIGNATED OWNERS, AT THE SAME TIME THAT THE MASS DEP PUMP TEST REPORT IS SUBMITTED TO THE BOARD OF HEALTH.

25. A DESIGNATED WELL SHALL BE DEEMED TO BE IMPACTED BY PUMPING FROM THE PROJECT'S WATER SUPPLY WELL IF THE SUM OF THE BASELINE SELF-INDUCED DRAWDOWN AND THE TEST-INDUCED DRAWDOWN EXCEEDS EITHER OF THE TWO FOLLOWING CRITERIA: (1) EXCEEDS 50% OF THE TOTAL AVAILABLE WATER COLUMN, AND AT LEAST 10% OF THIS TOTAL IS THE TEST-INDUCED DRAWDOWN, OR (2) EXCEEDS 75% OF THE TOTAL AVAILABLE WATER COLUMN, AND AT LEAST 2% OF THIS TOTAL IS THE TEST-INDUCED DRAWDOWN.

IF THE DESIGNATED WELL IS DEEMED TO BE NOT IMPACTED BY THE PROJECT'S WATER SUPPLY WELL BASED ON THE ABOVE CRITERIA, THEN NO FURTHER LONG-TERM MONITORING OF THE DESIGNATED WELL SHALL BE REQUIRED AND THE TRANSDUCER SHALL BE REMOVED FROM THE WELL. IF A DESIGNATED WELL IS DEEMED TO BE IMPACTED BY PUMPING FROM THE PROJECT'S WATER SUPPLY WELL, THEN LONG-TERM MONITORING OF THE WATER LEVEL IN SUCH IMPACTED DESIGNATED WELL ("IMPACTED WELL") SHALL BE REQUIRED. THIS LONG-TERM MONITORING SHALL INCLUDE LEAVING THE TRANSDUCER IN THE IMPACTED WELL TO RECORD WATER LEVELS FOR A PERIOD OF 5 YEARS AFTER THE PUMP TEST, OR 3 YEARS AFTER ISSUANCE OF THE FINAL CERTIFICATE OF OCCUPANCY, WHICHEVER IS LONGER. IF A LONG-TERM MONITORING PROGRAM IS NECESSARY, A WATER LEVEL TRANSDUCER AND FLOW METER SHALL ALSO BE INSTALLED ON THE PROJECT'S PUBLIC WATER SUPPLY WELL AND DATA RECORDED DURING THE MONITORING PERIOD. WATER LEVEL DATA SHALL BE DOWNLOADED FROM THE TRANSDUCERS AND FLOW METER DATA SHALL BE REPORTED TO THE BOARD OF HEALTH AT LEAST ANNUALLY.

26. TO EVALUATE IF A HYDROLOGIC CONNECTION EXISTS BETWEEN THE SURFACE WATER IN THE FIRE POND AND THE PROJECT'S WATER SUPPLY WELL, THE APPLICANT SHALL ESTABLISH SURFACE WATER ELEVATION MONITORING POINTS AT THE EDGE OF THE FIRE POND AND SHALL MONITOR THE SURFACE WATER ELEVATIONS FOR A MINIMUM OF 5 DAYS PRIOR TO THE PUMP TEST, DURING THE 5-DAY PUMP TEST, AND DURING THE SUBSEQUENT RECOVERY PERIOD. IF THE PUMP TEST INDICATES INSIGNIFICANT RESPONSE OF THE OVERBURDEN GROUNDWATER LEVEL TO THE PUMPING IN THE BEDROCK WELL, THEN LONG-TERM MONITORING OF SURFACE WATER LEVELS SHALL NOT BE REQUIRED. IF THE PUMP TEST INDICATES THE SURFACE WATER LEVEL IN THE FIRE POND IS SIGNIFICANTLY REDUCED DUE TO PUMPING FROM THE BEDROCK WELL (AND NOT FROM EVAPORATION OR LACK OF PRECIPITATION), THEN LONG-TERM MONITORING OF THE SURFACE WATER LEVEL SHALL BE CONDUCTED FOR A PERIOD OF 5 YEARS AFTER THE PUMP TEST, OR 3 YEARS AFTER ISSUANCE OF THE FINAL CERTIFICATE OF OCCUPANCY, WHICHEVER IS LONGER.

27. THE APPLICANT SHALL INSTALL SHALLOW MONITORING WELLS ON THE SITE, IN ACCORDANCE WITH MASS DEP REQUIREMENTS, IN THE OVERBURDEN SOILS ABOVE THE BEDROCK. THESE WELLS SHALL BE MONITORED DURING THE PUMP TEST OF THE PROJECT'S WATER SUPPLY WELL TO MONITOR THE WATER LEVEL RESPONSE IN THE OVERBURDEN SOIL AND POTENTIAL HYDROLOGIC CONNECTION TO THE BEDROCK THAT SUPPLIES WATER TO THE PROJECT'S WATER SUPPLY WELL. IF THE PUMP TEST INDICATES INSIGNIFICANT RESPONSE (AS DETERMINED BY MASS DEP) OF THE OVERBURDEN GROUNDWATER LEVEL TO THE PUMPING IN THE BEDROCK WELL, THEN LONG-TERM MONITORING OF WATER LEVELS IN THE OVERBURDEN SOIL SHALL NOT BE REQUIRED. IF THE PUMP TEST INDICATES THE OVERBURDEN GROUNDWATER LEVEL IS SIGNIFICANTLY REDUCED (AS DETERMINED BY MASS DEP) DUE TO PUMPING FROM THE BEDROCK WELL, THEN LONG-TERM MONITORING OF THE OVERBURDEN WATER LEVEL SHALL BE CONDUCTED FOR A PERIOD OF 5 YEARS AFTER THE PUMP TEST, OR 3 YEARS AFTER ISSUANCE OF THE FINAL CERTIFICATE OF OCCUPANCY, WHICHEVER IS LONGER.

28. THE APPLICANT SHALL PROVIDE THE PUMP TEST REPORT TO THE BOARD AND ITS CONSULTING ENGINEER FOR REVIEW AND COMMENT DURING THE DEP REVIEW OF THE NEW SOURCE APPROVAL PERMIT APPLICATION.

29. THE APPLICANT SHALL DEPOSIT INTO AN ESCROW ACCOUNT AT LEAST $10,000 PER DESIGNATED IMPACTED WELL THAT PARTICIPATES IN THE LONG TERM MONITORING PROGRAM AS DESCRIBED IN CONDITION #A25. THIS MONEY SHALL BE HELD AND DISBURSED IN ACCORDANCE WITH THE ENTRY AND ESCROW AGREEMENTS DESCRIBED IN CONDITION #A22, ABOVE.

A. GENERAL AND PRE-CONSTRUCTION CONDITIONS

30. PRIOR TO COMMENCING ANY SITE WORK AND PRIOR TO MAKING APPLICATION FOR ANY BUILDING PERMITS FOR THE PROJECT, THE APPLICANT SHALL SUBMIT TO DEP AN APPLICATION FOR A GROUNDWATER DISCHARGE PERMIT FOR THE DISCHARGE OF TREATED SANITARY WASTEWATER TO THE SUBSURFACE OF THE SITE VIA LEACHING FIELDS AS REQUIRED BY 314 CMR 5. AS PART OF THE APPLICATION FOR THE GROUNDWATER DISCHARGE PERMIT, THE APPLICANT SHALL SUBMIT A PROPOSED GROUNDWATER MONITORING PLAN THAT OUTLINES THE PROPOSED LONG-TERM GROUNDWATER MONITORING PROGRAM TO EVALUATE GROUNDWATER QUALITY IN THE VICINITY OF THE LEACHING FIELDS. THE GROUNDWATER MONITORING PLAN SHALL OUTLINE THE PROPOSED LOCATIONS FOR GROUNDWATER MONITORING WELLS, THE FREQUENCY OF GROUNDWATER SAMPLING, THE ANALYTICAL PARAMETERS FOR WHICH LABORATORY TESTING WILL BE PERFORMED ON THE GROUNDWATER SAMPLES, AND DATA REPORTING REQUIREMENTS. THIS GROUNDWATER MONITORING PLAN SHALL ALSO BE SUBMITTED TO THE BOARD AND THE BOARD OF HEALTH FOR REVIEW AND COMMENT DURING THE DEP PERMIT APPLICATION REVIEW PROCESS. IN ADDITION, THE ANNUAL GROUNDWATER QUALITY SUMMARY REPORTS TO BE SUBMITTED TO THE DEP AS REQUIRED BY THE GROUNDWATER DISCHARGE PERMIT SHALL ALSO BE SUBMITTED TO THE BOARD OF HEALTH.

31. PRIOR TO THE ISSUANCE OF ANY BUILDING PERMIT FOR THE PROJECT, THE APPLICANT SHALL PROVIDE THE BUILDING INSPECTOR WITH COPIES OF ALL PERMITS FROM THE MASSACHUSETTS DEPARTMENT OF ENVIRONMENTAL PROTECTION NECESSARY TO INSTALL AND OPERATE A PUBLIC WATER SUPPLY AND A WASTEWATER TREATMENT FACILITY, AND THE FACILITIES SHALL COMPLY IN ALL RESPECTS WITH THE STATE ENVIRONMENTAL CODE AND THE REQUIREMENTS OF SUCH PERMITS.

32. PRIOR TO THE COMMENCEMENT OF ANY SITE WORK, THE APPLICANT AND ITS GENERAL CONTRACTOR SHALL MEET WITH THE TOWN PLANNER, THE BUILDING INSPECTOR, AND THE BOARD'S CONSULTING ENGINEER IN ORDER TO ESTABLISH A CONSTRUCTION PHASING SCHEDULE AND DESIGNATED CONSTRUCTION ROUTE. THE INSTALLATION OF STRAW BALES AND SILT FENCE, AND THE CLEARING AND GRUBBING NECESSARY FOR SUCH INSTALLATION, SHALL NOT BE CONSIDERED "SITE WORK" FOR PURPOSES OF THIS DECISION. THE PROJECT ENGINEER, DURING THE SITE DEVELOPMENT PHASE OF THE PROJECT, SHALL VISIT THE SITE REGULARLY AND A MINIMUM OF TWICE A MONTH DURING PEAK ACTIVITY PERIODS AND SHALL PROVIDE REGULAR REPORTS TO THE INSPECTOR OF BUILDINGS AND TOWN'S CONSULTING ENGINEER TO ADVISE OF STATUS OF THE WORK, EROSION CONTROL MEASURE AND ANY SPECIAL CIRCUMSTANCES WHICH MAY ARISE.

33. PRIOR TO THE COMMENCEMENT OF ANY SITE WORK, THE APPLICANT SHALL APPLY FOR A CONSTRUCTION GENERAL PERMIT AS SPECIFIED BY THE FEDERAL CLEAN WATER ACT NATIONAL POLLUTION DISCHARGE ELIMINATION SYSTEMS (NPDES) AND PROVIDE PROOF OF FILING TO THE TOWN PLANNER.

34. PRIOR TO THE REMOVAL OF ANY EARTH FROM THE SITE, THE APPLICANT SHALL PROVIDE TO THE BUILDING INSPECTOR, WRITTEN NOTIFICATION THAT EARTH IS TO BE REMOVED AND SHALL ADVISE THE CHIEF OF POLICE. THE TRUCKING ROUTE WILL BE MASSACHUSETTS AVENUE TO ROUTE 495. THIS INFORMATION SHALL BE PROVIDED TO THE BUILDING INSPECTOR AS LEAST FORTY-EIGHT (48) BUSINESS HOURS PRIOR TO ANY REMOVAL OF EARTH.

35. PRIOR TO THE ERECTION OF ANY STRUCTURE WITH COMBUSTIBLE MATERIAL, THE APPLICANT SHALL INSTALL TO THE SATISFACTION OF THE FIRE DEPARTMENT, THE FIRE POND, DISTRIBUTION SYSTEM AND ADJACENT HYDRANTS TO SERVE THE BUILDINGS UNDER CONSTRUCTION.

36. THE APPLICANT, BY ACCEPTING AND RECORDING THIS COMPREHENSIVE PERMIT, WILL BE DEEMED TO HAVE AGREED TO COMPLY WITH, AND CAUSE TO COMPLY WITH, ALL REQUIREMENTS OF THE COMPREHENSIVE PERMIT AND ALL OTHER APPLICABLE LAWS, RULES, REGULATIONS AND EXECUTIVE ORDERS, AND THE REGULATORY AGREEMENT.

B. SITE DEVELOPMENT CONDITIONS

1. ALL BUILDINGS AND STRUCTURES SHALL BE LOCATED IN SUBSTANTIAL CONFORMANCE WITH THE FINAL SITE PLAN. FOLLOWING CONSTRUCTION BY THE APPLICANT, THERE SHALL BE NO FURTHER CONSTRUCTION, ENLARGEMENT OR INTENSITY OF THE MULTI-FAMILY USE BEYOND WHAT HAS BEEN APPROVED AS PART OF THIS COMPREHENSIVE PERMIT.

2. THE STYLE OF THE BUILDINGS SHALL BE SUBSTANTIALLY AS SHOWN ON THE ELEVATION PLANS THAT ARE PART OF THE REVISED ARCHITECTURAL DRAWINGS/ELEVATION PLANS (THE "ARCHITECTURAL PLANS") ENTITLED "JEFFERSON AT BEAVER BROOK, WARD ROAD, BOXBOROUGH, MASSACHUSETTS, DESIGN DEVELOPMENT" DATED FEBRUARY 27, 2015, PREPARED BY SHESKEY ARCHITECTS (COVER PLUS 23 SHEETS), WHICH WERE RECEIVED BY THE BOARD ON MARCH 2, 2015. THE LAYOUT OF EACH UNIT SHALL BE SUBSTANTIALLY AS SHOWN ON SUCH PLANS. THE APPLICANT SHALL USE "HARDIE-PLANK", "HARDIE-TRIM", "HARDIE-SHINGLE", AND "HARDIE-PANEL" OR EQUIVALENT PRODUCTS ON THE FACADES OF EACH STRUCTURE IN THE PROJECT AS INDICATED IN THE APPROVED ELEVATIONS SHOWN ON THE ARCHITECTURAL PLANS. VINYL SIDING, VINYL TRIM, VINYL LINEAL OR PVC PANEL SHALL NOT BE USED ON THE FACADES OF THE STRUCTURES IN THE PROJECT.

3. THE APPLICANT SHALL BE RESPONSIBLE FOR ALL MAINTENANCE OF THE PORTION(S) OF THE SITE AND FACILITIES WHICH SERVICE THE UNITS, INCLUDING BUT NOT LIMITED TO:

(a) CONTRACTING FOR PLOWING, SANDING, AND SNOW REMOVAL TO PROVIDE CONTINUOUS YEAR-ROUND PRACTICAL ACCESS AND EGRESS TO THE RESIDENCES BY SCHOOL BUSSES, EMERGENCY VEHICLES AND RESIDENTS;

(b) RETAINING A SERVICE PROVIDER FOR SITE MAINTENANCE AND ESTABLISHING A REGULAR SCHEDULE FOR SITE MAINTENANCE;

(c) REPAIRING AND MAINTAINING ALL DRIVEWAYS AND OTHER ACCESS WAYS , INCLUDING DRAINAGE STRUCTURES AND UTILITIES THEREIN;

(d) RETAINING A MAINTENANCE CONTRACT FOR INSPECTION AND MAINTENANCE, INCLUDING BUT NOT LIMITED TO ANNUAL SLUDGE REMOVAL (OR MORE FREQUENTLY AS REQUIRED BY APPLICABLE RULES AND REGULATIONS), OF THE WASTEWATER TREATMENT FACILITY;

(e) CONDUCTING YEARLY INSPECTION, MAINTENANCE AND CLEANING OF ALL ELEMENTS OF THE DRAINAGE SYSTEM, INCLUDING BUT NOT LIMITED TO CATCH BASINS, DRAIN MANHOLES, DETENTION BASINS, SWALES AND PIPELINES;

(f) FILING AN ANNUAL REPORT WITH THE PUBLIC WORKS DIRECTOR AND BOARD OF HEALTH, NOT LATER THAN JUNE 1ST, THAT THE ANNUAL DRAINAGE SYSTEM INSPECTION AND REQUIRED WASTEWATER TREATMENT FACILITY AND PUBLIC WATER SUPPLY INSPECTION HAVE BEEN COMPLETED AND ALL DEFICIENCIES, IF ANY, CORRECTED;

(g) ESTABLISHING AND MAINTAINING A RESERVE FUND SUFFICIENT TO FUND REQUIREMENTS FOR MAINTENANCE OF THE DRAINAGE SYSTEM, AND A RESERVE FUND FOR THE WASTEWATER TREATMENT FACILITY AS REQUIRED BY DEP;

(h) MAINTAINING ANY AND ALL EASEMENTS SHOWN ON THE FINAL SITE PLAN; AND

(i) INSTALLING AND MAINTAINING EXTERIOR PARKING LOT AND DRIVEWAY LIGHTS.

4. THERE WILL BE NO CONSTRUCTION ACTIVITY ON THE SITE BEFORE 7:00 A.M. OR AFTER 7:00 P.M., MONDAY THROUGH FRIDAY, AND BEFORE 8:00 A.M. OR AFTER 5:00 P.M. ON SATURDAY. THERE WILL BE NO CONSTRUCTION ON THE PREMISES ON SUNDAYS OR THE FOLLOWING LEGAL HOLIDAYS: NEW YEAR'S DAY, MEMORIAL DAY, JULY FOURTH, LABOR DAY, THANKSGIVING, AND CHRISTMAS. CONSTRUCTION ACTIVITY OUTSIDE THE DAYS AND HOURS SPECIFIED MAY BE ALLOWED ONLY BY WRITTEN PERMISSION FROM THE TOWN PLANNER.

5. THERE SHALL BE NO BURIAL OF STUMPS OR DEBRIS ON SITE. ALL STUMPS AND CONSTRUCTION DEBRIS SHALL BE REMOVED FROM THE SITE.

6. THE APPLICANT SHALL LOCATE ALL UTILITIES UNDERGROUND WITHIN THE SITE.

7. THE APPLICANT WILL INSTALL THE WATER AND DRAINAGE SYSTEM PURSUANT TO THE FINAL SITE PLAN. ALL UTILITY WORK SHALL BE PERFORMED AND CONDUCTED IN CONFORMANCE WITH THE REGULATIONS OF THE TOWN AND/OR DEP AS MAY BE APPLICABLE. ALL SUCH WORK SHALL BE PERFORMED IN ACCORDANCE WITH CURRENT ENGINEERING AND CONSTRUCTION STANDARDS. DEPARTMENT OF ENVIRONMENTAL PROTECTION STORM WATER MANAGEMENT POLICY, IN PARTICULAR VOLUME 2 BEST MANAGEMENT PRACTICES SHALL BE ADHERED TO DURING CONSTRUCTION OF THE STORM WATER MANAGEMENT SYSTEM AND DRAINAGE SYSTEM AND SUCH COMPLIANCE SHALL BE CERTIFIED BY THE APPLICANT'S ENGINEER, SUBJECT TO REVIEW AND APPROVAL OF THE BOARD'S CONSULTING ENGINEER AT APPLICANT'S EXPENSE.

B. SITE DEVELOPMENT CONDITIONS (CONT.)

8. THE BOXBOROUGH TOWN MEETING HAS VOTED TO AUTHORIZE THE BOARD OF SELECTMEN TO DISCONTINUE THAT PORTION OF CUNNINGHAM ROAD RUNNING FROM HILL ROAD TO THE PROPOSED WARD ROAD RIGHT OF WAY. WITHIN 90 DAYS OF COMPLETION OF WARD ROAD TO BINDER COURSE (MAKING WARD ROAD SUITABLE FOR ACCESS AND EGRESS TO AND FROM THE PROJECT SITE) THE APPLICANT SHALL SUBMIT A WRITTEN REQUEST TO THE BOARD OF SELECTMEN THAT THEY VOTE TO DISCONTINUE THAT PORTION OF CUNNINGHAM ROAD AND REQUEST PERMISSION FROM THE BOARD OF SELECTMEN TO INSTALL BARRIERS AND LANDSCAPING BETWEEN THE DISCONTINUED PORTION OF CUNNINGHAM ROAD AND WARD ROAD AS SHOWN ON THE FINAL SITE PLAN AND, IF PERMISSION IS GRANTED, THE APPLICANT SHALL INSTALL SAME WITHIN SIXTY (60) DAYS (WEATHER PERMITTING).

9. THE APPLICANT SHALL EQUIP EACH UNIT WITH WATER SAVING PLUMBING FIXTURES IN EVERY BATHROOM, KITCHEN, AND LAUNDRY AREA.

10. THE STONE WALL RUNNING ALONG THE PROPERTY LINE BETWEEN PARCEL 105 AND PARCEL 110.1, IDENTIFIED AS A PORTION OF THE OLD LANCASTER (MIDDLESEX COUNTY) BOUNDARY, SHALL BE PRESERVED IN ITS CURRENT CONDITION EXCEPT AS MAY BE NECESSARY TO IMPLEMENT THE TRAIL SHOWN ON EXHIBIT H.

11. WITHIN 24 HOURS OF ANY RAINFALL OVER 1 INCH, THE APPLICANT'S CONSTRUCTION SITE SUPERVISOR SHALL INSPECT, FILE AND POST A REPORT IN ACCORDANCE WITH NPDES PERMIT REQUIREMENTS AND PROVIDE A COPY TO THE TOWN PLANNER AND THE BOARD'S CONSULTING ENGINEER.

12. THE APPLICANT SHALL INSTALL A PRIVATE STREET SIGN MEETING THE SPECIFICATIONS OF THE PUBLIC WORKS DEPARTMENT AT THE INTERSECTION OF WARD ROAD AND MASSACHUSETTS AVENUE, AND SHALL INSTALL A STOP SIGN AT THE SAME INTERSECTION UNLESS MASSHIGHWAY REQUIRES OTHERWISE.

13. A FREESTANDING SIGN OF NO MORE THAN 32 S.F. AND OTHERWISE MEETING THE APPLICABLE REQUIREMENTS OF THE ZONING BYLAW, MAY BE ERECTED AT THE INTERSECTION OF WARD ROAD AND MASSACHUSETTS AVENUE IDENTIFYING THE PROJECT. A TEMPORARY SIGN ADVERTISING THE AVAILABILITY OF UNITS FOR RENT MAY BE INSTALLED FOR THE PERIOD SIX (6) MONTHS, AND SHALL BE REMOVED PRIOR TO THE INSTALLATION OF THE PERMANENT FREE-STANDING SIGN, UNLESS EXTENDED BY THE BOARD FOR GOOD CAUSE. THE LOCATION AND SPECIFICATIONS OF THE PROPOSED TEMPORARY AND FREESTANDING SIGNS SHALL BE INCLUDED ON THE LANDSCAPING PLAN SUBMITTED WITH THE DEFINITIVE SITE PLAN SUBMISSION.

14. THE LANDSCAPE PLAN SUBMITTED AS PART OF THE DEFINITIVE SITE PLAN SUBMISSION SHALL DESIGNATE THE QUANTITY OF LOAM TO BE REMOVED AND RE-USED. LOAM IN EXCESS OF THE AMOUNT DESIGNATED FOR RE-USE MAY BE REMOVED FROM THE SITE FOLLOWING COMPLETION OF THE PROJECT. ANY EARTH MATERIAL REMOVED FROM THE SITE SHALL BE REMOVED ONLY DURING PERMITTED CONSTRUCTION HOURS. ALL LOADED VEHICLES SHALL BE SUITABLY COVERED TO PREVENT DUST AND CONTENTS FROM SPILLING AND BLOWING FROM THE LOAD.

15. NO EARTH WORK OPERATION SHALL BE CONDUCTED, MAINTAINED, AND/OR LEFT IN A CONDITION SO AS TO ALTER THE NATURAL DRAINAGE FLOW BEYOND THE PROPERTY; OR CAUSE DUST, SILT, SOIL, OR OTHER MATERIALS TO BE DEPOSITED ON ADJACENT PROPERTIES; OR TO OTHERWISE CAUSE NUISANCES, HAZARDS, OR OTHER OBJECTIONABLE CONDITIONS DETRIMENTAL TO HEALTH, SAFETY, OR PROPERTY VALUES IN ADJACENT AREAS.

16. ALL INFRASTRUCTURE (UTILITIES, DRIVEWAYS, SIDEWALKS, DRAINAGE, ETC.) TO SERVICE A BUILDING SHALL BE CONSTRUCTED AS SHOWN ON THE FINAL SITE PLAN PRIOR TO OCCUPANCY OF THAT BUILDING, WITH THE EXCEPTION THAT THE DRIVEWAYS NEED ONLY BE COMPLETED TO BINDER COURSE PRIOR TO ISSUANCE OF CERTIFICATES OF OCCUPANCY. NOTWITHSTANDING THE FOREGOING, TO MINIMIZE THE LENGTH OF TIME HEAVY EQUIPMENT IS PRESENT AND WORKING ON SITE, THE APPLICANT MAY CONSTRUCT ALL FOUNDATIONS SIMULTANEOUSLY WITH THE CONSTRUCTION OF THE ABOVE-REFERENCED INFRASTRUCTURE.

17. THE APPLICANT SHALL KEEP THE SITE CLEAN DURING CONSTRUCTION. UPON COMPLETION OF ALL WORK ON SITE AND PRIOR TO AS-BUILT APPROVAL, ALL DEBRIS AND CONSTRUCTION MATERIALS SHALL BE REMOVED AND DISPOSED OF IN ACCORDANCE WITH STATE LAWS AND REGULATIONS AND THE BOARD SHALL BE NOTIFIED IN WRITING OF THE FINAL DISPOSITION OF THE MATERIALS.

18. DURING CONSTRUCTION, ALL CONSTRUCTION MATERIAL, DEBRIS, FILL AND EXCAVATED MATERIAL SHALL BE STOCKPILED IN AREAS AT THE SITE DESIGNATED BY THE APPLICANT AFTER CONSULTATION WITH THE BOARD'S CONSULTING ENGINEER. SAID MATERIAL SHALL BE STABILIZED TO PREVENT EROSION AND TO CONTROL DUST. ALL EXCESS FILL AND EXCAVATED MATERIALS THAT ARE NOT USED IN CONJUNCTION WITH CONSTRUCTION SHALL BE REMOVED FROM SITE AND DISPOSED OF IN ACCORDANCE WITH STATE LAWS AND REGULATIONS. AT NO TIME SHALL ANY DEBRIS OR OTHER MATERIAL BE BURIED OR DISPOSED OF AT THE SITE.

19. ALL CATCH BASINS AND DETENTION BASINS SHALL BE CLEANED AT THE END OF CONSTRUCTION.

20. THE APPLICANT SHALL PROVIDE PARKING AT A RATIO OF 1.85 SPACES PER UNIT, I.E. 451 SPACES, AND IN ADDITION TO THE WAIVERS GRANTED UNDER THE ORIGINAL COMPREHENSIVE PERMIT DECISION, A WAIVER IS GRANTED UNDER ARTICLE VI. 6006 OF THE BOXBOROUGH ZONING BY-LAW TO ALLOW FOR FEWER THAN TWO (2) SPACES PER DWELLING UNIT. NOTWITHSTANDING THE FOREGOING, IF WITHIN TWO (2) YEARS AFTER THE ISSUANCE OF THE FINAL CERTIFICATE OF OCCUPANCY FOR THE PROJECT, THE CHIEF OF POLICE DETERMINES THAT THERE IS INSUFFICIENT PARKING IN THE PROJECT TO ACCOMMODATE THE NEEDS OF RESIDENTS, EMPLOYEES AND VISITORS, THE APPLICANT SHALL PROVIDE UP TO AN ADDITIONAL 37 SPACES IN THE PROJECT IN THE AREAS SHOWN ON SITE DEVELOPMENT PLANS C-1A AND C-1B DATED FEBRUARY 27, 2015 WITH ZONING BOARD OF APPEALS STAMPS OF MARCH 2, 2015.

C. POST-CONSTRUCTION CONDITIONS

1. THE APPLICANT SHALL NOT TAKE ANY ACTION, OR FAIL TO TAKE ANY ACTION, THAT WOULD CAUSE THIS PROJECT NOT TO MEET THE PROVISIONS OF G.L. C. 40B, §§20 THROUGH 23.

2. OMITTED.

3. PRIOR TO THE ISSUANCE OF A CERTIFICATE OF OCCUPANCY FOR THE LAST BUILDING IN THE MULTI-FAMILY PORTION OF THE PROJECT, THE TOWN PLANNER SHALL VERIFY THAT ALL PLANTINGS SHOWN ON THE APPROVED LANDSCAPE PLAN HAVE BEEN INSTALLED. ANY MINOR MODIFICATION OR SUBSTITUTIONS SHALL BE REVIEWED AND APPROVED BY THE TOWN PLANNER. HOWEVER, IF THE APPLICANT PROVIDES DOCUMENTATION TO THE BOARD THAT IT WOULD BE DETRIMENTAL TO PLANT PRIOR TO OCCUPANCY DUE TO WEATHER CONDITIONS, THEN A BOND COVERING THE COST OF SUCH WORK SHALL BE SUBMITTED TO AND APPROVED BY THE BOARD AND A TEMPORARY CERTIFICATE OF OCCUPANCY SHALL BE ISSUED UNTIL ALL LANDSCAPING IS INSTALLED.

4. PRIOR TO THE ISSUANCE OF A CERTIFICATE OF OCCUPANCY FOR THE LAST BUILDING IN THE PROJECT, THE APPLICANT SHALL PAY ALL OUTSTANDING FEES INCURRED FOR THE BOARD'S CONSULTANTS, INCLUDING TOWN COUNSEL AND THE BOARD'S CONSULTING ENGINEER, FOR THE PERFORMANCE OF ANY OF THE REVIEW AND INSPECTION SERVICES CONTEMPLATED HEREIN, AND INCLUDING ANY SUCH FEES INCURRED PRIOR TO THE DATE OF THIS DECISION.

5. PRIOR TO THE ISSUANCE OF ANY CERTIFICATE OF OCCUPANCY, THE APPLICANT SHALL SUBMIT TO THE BUILDING INSPECTOR AND BOARD OF HEALTH COPIES OF APPROVALS SUITABLE FOR OCCUPANCY FROM DEP ON THE WASTEWATER TREATMENT FACILITY AND PUBLIC WATER SUPPLY.

6. PRIOR TO THE ISSUANCE OF THE FINAL CERTIFICATE OF OCCUPANCY FOR THE LAST BUILDING, THE APPLICANT SHALL CLEAR THE TRAIL FROM HILL ROAD TO WARD ROAD AS SHOWN ON EXHIBIT H.

7. WITHIN SIXTY (60) DAYS OF COMPLETION OF THE PROJECT, THE APPLICANT SHALL SUBMIT TO THE BOARD'S CONSULTING ENGINEER A WRITTEN REQUEST FOR AS-BUILT APPROVAL ACCOMPANIED BY TWO SETS OF AS-BUILT PLANS SHOWING THE LOCATION OF ALL BUILDINGS AND STRUCTURES, UTILITIES (INCLUDING THE SEPTIC SYSTEM, LEACHING AREA, UNDERGROUND PIPING) AND DRAINAGE FACILITIES AND, IF APPLICABLE, PROOF OF COMPLIANCE WITH THIS COMPREHENSIVE PERMIT AND ANY OTHER PERMITS REQUIRED FOR THE CONSTRUCTION OF THE IMPROVEMENTS CONTEMPLATED BY THIS COMPREHENSIVE PERMIT. THE TOWN PLANNER SHALL ALSO RECEIVE FINAL AS BUILT PLANS IN ELECTRONIC FORMAT COMPATIBLE AND/OR ABLE TO BE CONVERTED FOR USE WITH THE TOWN'S GIS.

C. POST-CONSTRUCTION CONDITIONS (CONT.)

8. THE APPLICANT SHALL ALSO PAY ALL REASONABLE FEES IMPOSED FOR THE PURPOSE OF MONITORING THE COMPLIANCE OF THE PROJECT'S CONSTRUCTION WITH THE TERMS OF THIS PERMIT, LOCAL BYLAW REQUIREMENTS NOT WAIVED BY THIS PERMIT, AND OTHER PERMITS AND APPROVALS ISSUED WITH RESPECT TO THIS PROJECT FOR WHICH THE TOWN HAS MONITORING RESPONSIBILITY OTHER THAN THOSE AREAS FOR WHICH THE BUILDING INSPECTOR HAS RESPONSIBILITY (AS TO WHICH BUILDING PERMIT FEES SHALL COVER ALL SUCH COSTS OF INSPECTION). THE BUILDING INSPECTOR OR HIS DESIGNEE SHALL BE RESPONSIBLE FOR CONSTRUCTION INSPECTION AND THE NORMAL BUILDING PERMIT FEES SHALL APPLY. FOR PURPOSES OF CONFIRMING THAT THE SITE WORK IS PERFORMED IN ACCORDANCE WITH THE FINAL SITE PLAN, CONSISTENT WITH TOWN PRACTICE, THE BOARD'S CONSULTING ENGINEER WILL BE USED FOR THIS PURPOSE WHERE APPLICABLE.

9. ALL EXISTING AND PROPOSED LANDSCAPING SHOWN ON THE LANDSCAPING PLAN SHALL BE MAINTAINED IN A HEALTHY STATE. ANY LANDSCAPING FOUND BY THE TOWN PLANNER TO BE DISEASED OR DYING SHALL BE REPLACED BY THE APPLICANT IN ACCORDANCE WITH BEST PRACTICES.

10. MAINTENANCE OF WARD ROAD AND ALL DRIVEWAYS AND OTHER ACCESS WAYS EXTENDING INTO THE SITE FROM WARD ROAD SHALL REMAIN THE PRIVATE RESPONSIBILITY OF THE APPLICANT.

11. THE APPLICANT SHALL HAVE THE BUILDING SPRINKLER SYSTEMS IN THE UNITS TESTED ANNUALLY AND HAVE A COPY OF THE TESTING REPORT SENT TO THE FIRE DEPARTMENT.

12. THIS COMPREHENSIVE PERMIT SHALL NOT BE TRANSFERABLE, EXCEPT IN ACCORDANCE WITH THE PROVISIONS OF M.G.L. C. 40B, §§20 THROUGH 23 AND WITH PRIOR WRITTEN NOTIFICATION TO THE BOARD.

13. ONCE CONSTRUCTION UNDER THE RECORDED COMPREHENSIVE PERMIT HAS COMMENCED, THE PROVISIONS OF THIS PERMIT SHALL BE BINDING UPON THE APPLICANT AND ITS SUCCESSORS AND ASSIGNS, AND THE AUTHORIZATIONS AND OBLIGATIONS HEREUNDER SHALL RUN WITH THE LAND. THEREAFTER, ANY INSTRUMENT FOR SALE OR TRANSFER OF RIGHTS OR INTEREST IN ALL OR ANY PART OF THE SITE SHALL REFERENCE THIS COMPREHENSIVE PERMIT AND SHALL INCLUDE A NOTICE THAT THE SUCCESSORS ARE BOUND TO ITS TERMS AND CONDITIONS.

14. IF BETWEEN THE DATE THIS DECISION IS FILED IN THE OFFICE OF THE BOXBOROUGH TOWN CLERK AND THE DATE OF THE COMPLETION OF THE PROJECT, THE APPLICANT DESIRES TO CHANGE IN A MATERIAL WAY AND/OR TO A SIGNIFICANT DEGREE THE PROPOSED PROJECT AS REFLECTED IN AND APPROVED BY THIS DECISION (INCLUDING THE PROJECT AS SHOWN ON THE FINAL SITE PLAN) SUCH CHANGES SHALL BE GOVERNED BY 760 CMR 56.05(11). IN NO CASE, HOWEVER, SHALL THE APPLICANT BE ALLOWED TO IMPLEMENT A PROJECT CHANGE THAT (A) INCREASES THE NUMBER OF DWELLING UNITS, OR (B) MATERIALLY OR SIGNIFICANTLY ALTERS THE BUILDING FOOTPRINTS, OR (C) CHANGES THE MIX OF AFFORDABLE AND MARKET-RATE DWELLINGS, OR (D) MATERIALLY OR SIGNIFICANTLY INCREASES THE HEIGHT OF THE BUILDINGS, OR (E) CHANGES ANY OF THE UNITS TO OWNERSHIP UNITS, OR (F) INCREASES THE NUMBER OF BEDROOMS IN THE PROJECT, WITHOUT SUBMITTING A NEW APPLICATION AND UNDERGOING A NEW PUBLIC HEARING AND DECISION PROCESS.

D. AFFORDABILITY CONDITIONS

1. AS REQUIRED BY THE SUBSIDIZING AGENCY, NO FEWER THAN TWENTY-FIVE PERCENT (25%) OF THE 244 UNITS (61) SHALL BE DESIGNATED AS LOW OR MODERATE INCOME HOUSING UNITS MEETING THE DEFINITION IN M.G.L. C. 40B, §20 (THE "AFFORDABLE UNITS").

2. ONCE CONSTRUCTED, ALL OF THE UNITS IN THE PROJECT SHALL REMAIN AS RENTAL UNITS FOR AS LONG AS THE PROJECT IS NOT IN COMPLIANCE WITH THE TOWN'S ZONING BYLAW, SO THAT SUCH UNITS WILL CONTINUE TO SERVE THE PUBLIC PURPOSES FOR WHICH THIS COMPREHENSIVE PERMIT WAS AUTHORIZED UNDER M.G.L. C. 40B, 20-23, INCLUDING THE PURPOSE OF MEETING REGIONAL HOUSING NEEDS.

3. DEVELOPER WILL BE ENTERING INTO A REGULATORY AGREEMENT WITH MASSHOUSING OR ANOTHER SUBSIDIZING AGENCY WITH RESPECT TO THE PROJECT WHICH, INTER ALIA, WILL SET FORTH CERTAIN RESTRICTIONS AS TO LOW OR MODERATE INCOME HOUSING TO BE PROVIDED AS PART OF THE DEVELOPMENT AS THE SAME MAY BE HEREAFTER EXTENDED OR AMENDED (THE "SUBSIDIZING AGENCY AGREEMENT"). IT IS THE INTENTION OF THE COMPREHENSIVE PERMIT THAT THE DEVELOPMENT WOULD, IN PERPETUITY AND WITHOUT INTERRUPTION, BE SUBJECT TO A SUITABLE REGULATORY AGREEMENT CONSISTENT WITH THE COMPREHENSIVE PERMIT GOVERNING THE LOW OR MODERATE INCOME HOUSING (THE "AFFORDABLE UNITS") IN THE DEVELOPMENT. FOR SO LONG AS THE SAME ARE IN EFFECT, THE SUBSIDIZING AGENCY AGREEMENTS SATISFY IN FULL THE REQUIREMENTS OF A REGULATORY AGREEMENT. FROM AND AFTER THE EXPIRATION OR TERMINATION OF THE SUBSIDIZING AGENCY AGREEMENT, THE APPLICANT AND THE TOWN SHALL ENTER INTO A REPLACEMENT REGULATORY AGREEMENT, PURSUANT TO WHICH THE TOWN SHALL HAVE THE RIGHT TO MONITOR AND ENFORCE THE REQUIREMENT THAT THE AFFORDABLE UNITS BE MAINTAINED AS SUCH FOR SO LONG AS THE PROJECT EXISTS ON THE PROPERTY. SAID REPLACEMENT REGULATORY AGREEMENT SHALL BE IN ACCORDANCE WITH THE PROVISIONS OF M.G.L. C. 184, §31-33, SHALL BE ENFORCEABLE BY THE TOWN OF BOXBOROUGH, AND SHALL BE IN A FORM APPROVED BY TOWN COUNSEL. A TITLE CERTIFICATION LETTER SHALL BE PROVIDED BY A LICENSED ATTORNEY IDENTIFYING THE RECORD OWNERS OF AND HOLDERS OF ANY MORTGAGE LIENS AGAINST THE SITE AND ALL OWNERS OF RECORD SHALL ENDORSE THE RESTRICTION AND ALL RECORD MORTGAGE LIEN HOLDERS SHALL SUBORDINATE THEIR INTERESTS TO THE RESTRICTION.

4. INSOFAR AS ALLOWED UNDER APPLICABLE LAW AND APPROVED BY THE PROJECT ADMINISTRATOR OR SUBSIDIZING AGENCY, WITH RESPECT TO AT LEAST 70% OF THE AFFORDABLE UNITS, THE TENANT SELECTION PLAN SHALL INCLUDE A LOTTERY PREFERENCE CATEGORY FOR EMPLOYEES OF THE TOWN OF BOXBOROUGH THE BLANCHARD SCHOOL, AND THE ACTON-BOXBOROUGH REGIONAL SCHOOL SYSTEM, BOXBOROUGH RESIDENTS AND THEIR PARENTS AND NON-DEPENDENT CHILDREN.

5. SUBJECT TO APPROVAL BY THE PROJECT ADMINISTRATOR OR SUBSIDIZING AGENCY, AS THE CASE MAY BE, THE APPLICANT SHALL RETAIN A QUALIFIED ENTITY TO CONDUCT THE LOTTERY FOR THE LEASING OF THE AFFORDABLE UNITS, AND THE APPLICANT SHALL BE RESPONSIBLE FOR THE PAYMENT OF ANY REASONABLE FEES ASSOCIATED WITH CONDUCTING SUCH LOTTERY.

6. THE APPLICANT SHALL ENSURE THAT ALL DOCUMENTS, STATEMENTS AND REPORTS PREPARED BY THE APPLICANT AND DELIVERED TO DHCD AND/OR THE PROJECT ADMINISTRATOR OF SUBSIDIZING AGENCY AS REQUIRED BY THE SUBSIDIZING AGENCY AGREEMENT ARE DELIVERED PROMPTLY TO THE BOARD AND TO THE TOWN ADMINISTRATOR.

7. NOTWITHSTANDING ANYTHING HEREIN TO THE CONTRARY, IT IS THE INTENT OF THIS COMPREHENSIVE PERMIT THAT AT LEAST 61 OF THE 244 UNITS IN THE PROJECT SHALL BE AND REMAIN AFFORDABLE FOR RENT BY INCOME ELIGIBLE HOUSEHOLDS FOR AT LEAST AS LONG AS THE PROJECT IS NOT IN COMPLIANCE WITH THE TOWN OF BOXBOROUGH ZONING BYLAW, SO THAT SUCH DWELLING UNITS SHALL CONTINUE TO SERVE THE PUBLIC PURPOSES FOR WHICH THIS COMPREHENSIVE PERMIT WAS AUTHORIZED UNDER M.G.L. C. §20-23, AND SO THAT THE ENTIRE PROJECT SHALL BE COUNTED ON THE DHCD SUBSIDIZED HOUSING INVENTORY (SHI) FOR BOXBOROUGH. THE APPLICANT SHALL NOTIFY THE BOARD AND THE TOWN ADMINISTRATOR WHEN BUILDING PERMITS ARE ISSUED AND COOPERATE WITH THE PREPARATION OF REQUEST FORMS TO ADD THE UNITS TO THE SHI. THE APPLICANT SHALL NOTIFY THE BOARD AND THE TOWN ADMINISTRATOR WHEN OCCUPANCY PERMITS ARE ISSUED AND COOPERATE WITH THE PREPARATION OF REQUEST FORMS TO ADD THE UNITS TO THE SHI PERMANENTLY.

N:\PROJECTS\2075-01\CIVIL\DRAWINGS\CURRENT\2075-01 - ABBREVIATIONS & NOTES.DWG

JPI

WAIVERS OF TOWN OF BOXBOROUGH ZONING BYLAWS:

4.4003(1) USE REGULATION SCHEDULE
WAIVER TO PERMIT SINGLE-FAMILY AND MULTI-FAMILY ATTACHED RESIDENTIAL USES NOT OTHERWISE PERMITTED IN THE INDUSTRIAL COMMERCIAL DISTRICT (I.E., THE PROPOSED TWO (2) SINGLE FAMILY DWELLINGS AND THE PROPOSED 244 APARTMENT UNITS IN ELEVEN (11) MULTI-FAMILY BUILDINGS, FOR A TOTAL OF 246 UNITS)
4.4033 USE REGULATION SCHEDULE
WAIVER TO PERMIT A USE WHICH IS NOT OTHERWISE ACCESSORY TO INDUSTRIAL-COMMERCIAL USES, I.E., A CLUBHOUSE/RENTAL OFFICE.
5.5002 DIMENSIONAL SCHEDULE
WAIVER OF REQUIREMENT FOR A MAXIMUM FLOOR AREA RATIO OF 0.10.
6.6004 SURFACE, CIRCULATION, AND LANDSCAPING REQUIREMENTS
WAIVER OF REQUIREMENT THAT AUTOMOBILE PARKING SPACES SHALL NOT BE LESS THAN 10 FEET BY 20 FEET, IN ORDER TO ALLOW PARKING SPACE OF 9 FEET BY 18 FEET.
6.6103 MULTIPLE BUILDINGS ON ONE LOT
WAIVER OF REQUIREMENT THAT WHERE MORE THAN ONE BUILDING IS PROPOSED TO BE BUILT UPON A LOT, THE PLAN SHALL BE REVIEWED BY THE PLANNING BOARD REGARDING ADEQUACY OF ACCESS TO BUILDINGS, IN ORDER TO SUBSTITUTE THE PERMISSION FROM THE ZONING BOARD OF APPEALS GRANTED UNDER THIS COMPREHENSIVE PERMIT.
6.6105 PRIVATE/COMMON DRIVEWAYS IN THE BUSINESS, BUSINESS 1, OFFICE PARK, TOWN CENTER, AND INDUSTRIAL-COMMERCIAL DISTRICTS
WAIVER OF THE REQUIREMENT THAT PRIVATE/COMMON DRIVEWAYS ARE ALLOWED IN THE IC DISTRICT ONLY BY SPECIAL PERMIT OF THE PLANNING BOARD, IN ORDER TO SUBSTITUTE THE PERMISSION FROM THE ZONING BOARD OF APPEALS UNDER THIS COMPREHENSIVE PERMIT.
7.7004(G) SPECIAL REGULATIONS AQUIFER PROTECTION DISTRICT
WAIVER OF REQUIREMENT THAT THERE BE NO DISPOSAL OF SANITARY WASTE TO A SUBSURFACE DISPOSAL SYSTEM IN QUANTITIES EXCEEDING 440 GALLONS PER DAY PER ACRE OF AQUIFER PROTECTION DISTRICT CONTAINED WITHIN THE LOT, IN ORDER TO ALLOW QUANTITIES OF UP TO 750 GALLONS PER DAY PER ACRE OF THE SITE IN THE AQUIFER PROTECTION DISTRICT IN THE EVENT RESERVE LEACHING FIELDS ARE USED.
7.7007(1) DESIGN REQUIREMENTS
WAIVER OF REQUIREMENT THAT WHERE A PORTION OF THE SITE IS LOCATED OUTSIDE OF THE AQUIFER PROTECTION DISTRICT, POTENTIAL POLLUTION SOURCES, SUCH AS ON SITE DISPOSAL SYSTEMS, SHOULD BE LOCATED OUTSIDE THE DISTRICT BOUNDARIES, IN ORDER TO ALLOW RESERVE LEACHING FIELD TO BE LOCATED WITHIN THE AQUIFER PROTECTION DISTRICT.
7.7104(G) AND (H) W-DISTRICT USE REGULATIONS
WAIVER OF REQUIREMENTS FOR SPECIAL PERMIT FOR USE IN THE W-DISTRICT, IN ORDER TO SUBSTITUTE APPROVAL UNDER THIS COMPREHENSIVE PERMIT.
7.7106 SUBMITTALS
WAIVER OF REQUIREMENTS FOR SPECIAL PERMIT APPLICATIONS TO BE PREPARED AND SUBMITTED TO THE BOARD OF APPEALS, IN ORDER TO PERMIT ONE COMPREHENSIVE SUBMISSION TO THE BOARD TO BE ACTED ON UNDER G.L. C. 40B, §21.
7.7109 PROCEDURES
WAIVER OF REQUIREMENT FOR SPECIAL PERMIT APPLICATIONS TO BE PREPARED AND SUBMITTED TO THE BOARD OF APPEALS IN ORDER TO PERMIT A SINGLE COMPREHENSIVE PERMIT SUBMISSION TO THE BOARD TO BE ACTED UPON UNDER G.L. C.40B, §21.
7.7200 LANDS BORDERING THE W-DISTRICT
WAIVER OF REQUIREMENT FOR SPECIAL PERMIT TO PLACE STRUCTURES WITHIN ONE HUNDRED (100') FEET OF THE W-DISTRICT, IN ORDER TO PERMIT CONSTRUCTION OF WARD ROAD AND A FIRE POND WITHIN 100' OF W-DISTRICT.
8.8000 SITE PLAN APPROVAL & DESIGN REVIEW
WAIVER OF REQUIREMENT FOR SITE PLAN REVIEW BY THE PLANNING BOARD FOR THE CONSTRUCTION OF MULTI-FAMILY STRUCTURES AND PARKING AREAS ASSOCIATED WITH MULTI-FAMILY STRUCTURES.
9.9001(2) BUILDING PERMITS
WAIVER OF REQUIREMENT THAT NO BUILDING PERMIT SHALL BE ISSUED BY THE INSPECTOR OF BUILDINGS WITHOUT THE WRITTEN APPROVAL OF A SITE PLAN BY THE PLANNING BOARD.

WAIVERS FROM TOWN OF BOXBOROUGH REGULATIONS FOR THE WETLAND BYLAW:

SECTION 2.5.3.1 PERFORMANCE STANDARDS
WAIVER OF PROHIBITION OF PARKING LOTS, PERMANENT STRUCTURES, AND SANITARY WASTE DISPOSAL SYSTEMS WITHIN ADJACENT LAND RESOURCE AREA, IN ORDER TO ALLOW THE PLACEMENT OF THE PROPOSED SANITARY WASTE DISPOSAL SYSTEM, PARKING LOT, ROAD AND OTHER PERMANENT STRUCTURES WITHIN THE ADJACENT LAND RESOURCE AREA IN ACCORDANCE WITH THE SITE PLAN APPROVED FOR THE PROJECT UNDER THIS COMPREHENSIVE PERMIT.

WAIVERS FROM BOXBOROUGH COMPREHENSIVE PERMIT RULES OF THE ZONING BOARD OF APPEALS:

SECTION 3.02(I) LIST OF REQUESTED EXCEPTIONS
WAIVER OF REQUIREMENT THAT APPLICANT PROVIDES A COMPLETE LIST OF ALL REQUESTED EXCEPTIONS AT THE TIME OF THE INITIAL FILING OF THE APPLICATION IN ORDER TO PERMIT THE LIST TO BE REVISED AS THE PROJECT EVOLVES THROUGH THE HEARING AND APPROVAL PROCESS.

COMMONWEALTH OF MASSACHUSETTS
TIMOTHY J. WILLIAMS
CIVIL
No.43119
REGISTERED PROFESSIONAL ENGINEER
7/8/15

PROFESSIONAL ENGINEER FOR
ALLEN & MAJOR ASSOCIATES, INC.

REV	DATE	DESCRIPTION
9.	07/08/2015	ISSUED FOR DEFINITIVE SITE PLAN
8.	06/12/2015	REVISED PER FIRE DEPARTMENT COMMENTS
7.	05/15/2015	ISSUED FOR PERMIT
6.	05/05/2015	ISSUED FOR DEP PERMIT APPROVAL
5.	05/04/2015	REVISED FOR PRICING
4.	03/26/2015	REVISED PER TOWN COMMENTS
3.	03/02/2015	ISSUED FOR MEPA
2.	02/27/2015	REVISED PER TOWN COMMENTS
1.	02/12/2015	ISSUED FOR ZONING BOARD OF APPEALS

APPLICANT:

JPI
3 WEST MAIN STREET, SUITE 203
IRVINGTON, NY 10533

PROJECT:

DEFINITIVE SITE PLAN SET
JEFFERSON AT BEAVER BROOK
BOXBOROUGH, MA

PROJECT NO.	2075-01	DATE:	02-11-2015
SCALE:	AS NOTED	DWG. NAME:	C2075-10
DESIGNED BY:	SJL	CHECKED BY:	CMQ

PREPARED BY:

ALLEN & MAJOR ASSOCIATES, INC.
civil & structural engineering ♦ land surveying
environmental consulting ♦ landscape architecture
www.allenmajor.com
100 COMMERCE WAY
P.O. BOX 2118
WOBURN MA 01888-0118
TEL: (781) 935-6889
FAX: (781) 935-2896
WOBURN, MA ♦ LAKEVILLE, MA ♦ MANCHESTER, NH

THIS DRAWING HAS BEEN PREPARED IN ELECTRONIC FORMAT. CLIENT/CLIENT'S REPRESENTATIVE OR CONSULTANT MAY BE PROVIDED COPIES OF DRAWINGS AND SPECIFICATIONS ON MAGNETIC MEDIA FOR HIS/HER INFORMATION AND USE FOR SPECIFIC APPLICATION TO THIS PROJECT. DUE TO THE POTENTIAL THAT THE MAGNETIC INFORMATION MAY BE MODIFIED UNINTENTIONALLY OR OTHERWISE, ALLEN & MAJOR ASSOCIATES, INC. MAY REMOVE ALL INDICATION OF THE DOCUMENT'S AUTHORSHIP ON THE MAGNETIC MEDIA. PRINTED REPRESENTATIONS OF THE DRAWINGS AND SPECIFICATIONS ISSUED SHALL BE THE ONLY RECORD COPIES OF ALLEN & MAJOR ASSOCIATES, INC.'S WORK PRODUCT.

DRAWING TITLE: PERMIT CONDITIONS

SHEET No. ABB-3

Copyright©2015 Allen & Major Associates, Inc. All Rights Reserved

CONSERVATION COMMISSION CONDITIONS: DEP FILE #113-523
GENERAL CONDITIONS UNDER MASSACHUSETTS WETLANDS PROTECTION ACT:

1. FAILURE TO COMPLY WITH ALL CONDITIONS STATED HEREIN, AND WITH ALL RELATED STATUTES AND OTHER REGULATORY MEASURES, SHALL BE DEEMED CAUSE TO REVOKE OR MODIFY THIS ORDER.

2. THE ORDER DOES NOT GRANT ANY PROPERTY RIGHTS OR ANY EXCLUSIVE PRIVILEGES; IT DOES NOT AUTHORIZE ANY INJURY TO PRIVATE PROPERTY OR INVASION OF PRIVATE RIGHTS.

3. THIS ORDER DOES NOT RELIEVE THE PERMITTEE OR ANY OTHER PERSON OF THE NECESSITY OF COMPLYING WITH ALL OTHER APPLICABLE FEDERAL, STATE, OR LOCAL STATUTES, ORDINANCES, BYLAWS, OR REGULATIONS.

4. THE WORK AUTHORIZED HEREUNDER SHALL BE COMPLETED WITHIN THREE YEARS FROM THE DATE OF THIS ORDER UNLESS EITHER OF THE FOLLOWING APPLY:

 a. THE WORK IS A MAINTENANCE DREDGING PROJECT AS PROVIDED FOR IN THE ACT; OR
 b. THE TIME FOR COMPLETION HAS BEEN EXTENDED TO A SPECIFIED DATE MORE THAN THREE YEARS, BUT LESS THAN FIVE YEARS, FROM THE DATE OF ISSUANCE. IF THIS ORDER IS INTENDED TO BE VALID FOR MORE THAN THREE YEARS, THE EXTENSION DATE AND THE SPECIAL CIRCUMSTANCES WARRANTING THE EXTENDED TIME PERIOD ARE SET FORTH AS A SPECIAL CONDITION IN THIS ORDER.
 c. IF THE WORK IS FOR A TEST PROJECT, THIS ORDER OF CONDITIONS SHALL BE VALID FOR NO MORE THAN ONE YEAR.

5. THIS ORDER MAY BE EXTENDED BY THE ISSUING AUTHORITY FOR ONE OR MORE PERIODS OF UP TO THREE YEARS EACH UPON APPLICATION TO THE ISSUING AUTHORITY AT LEAST 30 DAYS PRIOR TO THE EXPIRATION DATE OF THE ORDER. AN ORDER OF CONDITIONS FOR A TEST PROJECT MAY BE EXTENDED FOR ONE ADDITIONAL YEAR ONLY UPON WRITTEN APPLICATION BY THE APPLICANT, SUBJECT TO THE PROVISIONS OF 310 CMR 10.05(11)(F).

6. IF THIS ORDER CONSTITUTES AN AMENDED ORDER OF CONDITIONS, THIS AMENDED ORDER OF CONDITIONS DOES NOT EXTEND THE ISSUANCE DATE OF THE ORIGINAL FINAL ORDER OF CONDITIONS AND THE ORDER WILL EXPIRE ON LLLLL UNLESS EXTENDED IN WRITING BY THE DEPARTMENT.

7. ANY FILL USED IN CONNECTION WITH THIS PROJECT SHALL BE CLEAN FILL. ANY FILL SHALL CONTAIN NO TRASH, REFUSE, RUBBISH, OR DEBRIS, INCLUDING BUT NOT LIMITED TO LUMBER, BRICKS, PLASTER, WIRE, LATH, PAPER, CARDBOARD, PIPE, TIRES, ASHES, REFRIGERATORS, MOTOR VEHICLES, OR PARTS OF ANY OF THE FOREGOING.

8. THIS ORDER IS NOT FINAL UNTIL ALL ADMINISTRATIVE APPEAL PERIODS FROM THIS ORDER HAVE ELAPSED, OR IF SUCH AN APPEAL HAS BEEN TAKEN, UNTIL ALL PROCEEDINGS BEFORE THE DEPARTMENT HAVE BEEN COMPLETED.

9. NO WORK SHALL BE UNDERTAKEN UNTIL THE ORDER HAS BECOME FINAL AND THEN HAS BEEN RECORDED IN THE REGISTRY OF DEEDS OR THE LAND COURT FOR THE DISTRICT IN WHICH THE LAND IS LOCATED, WITHIN THE CHAIN OF TITLE OF THE AFFECTED PROPERTY. IN THE CASE OF RECORDED LAND, THE FINAL ORDER SHALL ALSO BE NOTED IN THE REGISTRY'S GRANTOR INDEX UNDER THE NAME OF THE OWNER OF THE LAND UPON WHICH THE PROPOSED WORK IS TO BE DONE. IN THE CASE OF THE REGISTERED LAND, THE FINAL ORDER SHALL ALSO BE NOTED ON THE LAND COURT CERTIFICATE OF TITLE OF THE OWNER OF THE LAND UPON WHICH THE PROPOSED WORK IS DONE. THE RECORDING INFORMATION SHALL BE SUBMITTED TO THE CONSERVATION COMMISSION ON THE FORM AT THE END OF THIS ORDER, WHICH FORM MUST BE STAMPED BY THE REGISTRY OF DEEDS, PRIOR TO THE COMMENCEMENT OF WORK.

10. A SIGN SHALL BE DISPLAYED AT THE SITE NOT LESS THEN TWO SQUARE FEET OR MORE THAN THREE SQUARE FEET IN SIZE BEARING THE WORDS, "MASSACHUSETTS DEPARTMENT OF ENVIRONMENTAL PROTECTION" [OR, "MASSDEP"] "FILE NUMBER113-523"

11. WHERE THE DEPARTMENT OF ENVIRONMENTAL PROTECTION IS REQUESTED TO ISSUE A SUPERSEDING ORDER, THE CONSERVATION COMMISSION SHALL BE A PARTY TO ALL AGENCY PROCEEDINGS AND HEARINGS BEFORE MASSDEP.

12. UPON COMPLETION OF THE WORK DESCRIBED HEREIN, THE APPLICANT SHALL SUBMIT A REQUEST FOR CERTIFICATE OF COMPLIANCE (WPA FORM 8A) TO THE CONSERVATION COMMISSION.

13. THE WORK SHALL CONFORM TO THE PLANS AND SPECIAL CONDITIONS REFERENCED IN THIS ORDER.

14. ANY CHANGE TO THE PLANS IDENTIFIED IN CONDITION #13 ABOVE SHALL REQUIRE THE APPLICANT TO INQUIRE OF THE CONSERVATION COMMISSION IN WRITING WHETHER THE CHANGE IS SIGNIFICANT ENOUGH TO REQUIRE THE FILING OF A NEW NOTICE OF INTENT.

15. THE AGENT OR MEMBERS OF THE CONSERVATION COMMISSION AND THE DEPARTMENT OF ENVIRONMENTAL PROTECTION SHALL HAVE THE RIGHT TO ENTER AND INSPECT THE AREA SUBJECT TO THIS ORDER AT REASONABLE HOURS TO EVALUATE COMPLIANCE WITH THE CONDITIONS STATED IN THIS ORDER, AND MAY REQUIRE THE SUBMITTAL OF ANY DATA DEEMED NECESSARY BY THE CONSERVATION COMMISSION OR DEPARTMENT FOR THAT EVALUATION.

16. THIS ORDER OF CONDITIONS SHALL APPLY TO ANY SUCCESSOR IN INTEREST OR SUCCESSOR IN CONTROL OF THE PROPERTY SUBJECT TO THIS ORDER AND TO ANY CONTRACTOR OR OTHER PERSON PERFORMING WORK CONDITIONED BY THIS ORDER.

17. PRIOR TO THE START OF WORK, AND IF THE PROJECT INVOLVES WORK ADJACENT TO A BORDERING VEGETATED WETLAND, THE BOUNDARY OF THE WETLAND IN THE VICINITY OF THE PROPOSED WORK AREA SHALL BE MARKED BY WOODEN STAKES OR FLAGGING. ONCE IN PLACE, THE WETLAND BOUNDARY MARKERS SHALL BE MAINTAINED UNTIL A CERTIFICATE OF COMPLIANCE HAS BEEN ISSUED BY THE CONSERVATION COMMISSION.

18. ALL SEDIMENTATION BARRIERS SHALL BE MAINTAINED IN GOOD REPAIR UNTIL ALL DISTURBED AREAS HAVE BEEN FULLY STABILIZED WITH VEGETATION OR OTHER MEANS. AT NO TIME SHALL SEDIMENTS BE DEPOSITED IN A WETLAND OR WATER BODY. DURING CONSTRUCTION, THE APPLICANT OR HIS/HER DESIGNEE SHALL INSPECT THE EROSION CONTROLS ON A DAILY BASIS AND SHALL REMOVE ACCUMULATED SEDIMENTS AS NEEDED. THE APPLICANT SHALL IMMEDIATELY CONTROL ANY EROSION PROBLEMS THAT OCCUR AT THE SITE AND SHALL ALSO IMMEDIATELY NOTIFY THE CONSERVATION COMMISSION, WHICH RESERVES THE RIGHT TO REQUIRE ADDITIONAL EROSION AND/OR DAMAGE PREVENTION CONTROLS IT MAY DEEM NECESSARY. SEDIMENTATION BARRIERS SHALL SERVE AS THE LIMIT OF WORK UNLESS ANOTHER LIMIT OF WORK LINE HAS BEEN APPROVED BY THIS ORDER.

19. THE WORK ASSOCIATED WITH THIS ORDER (THE "PROJECT") IS SUBJECT TO THE MASSACHUSETTS STORMWATER STANDARDS

 a. IF THE WORK IS SUBJECT TO THE STORMWATER STANDARDS, THEN THE PROJECT IS SUBJECT TO THE FOLLOWING CONDITIONS:A) ALL WORK, INCLUDING SITE PREPARATION, LAND DISTURBANCE, CONSTRUCTION AND REDEVELOPMENT, SHALL BE IMPLEMENTED IN ACCORDANCE WITH THE CONSTRUCTION PERIOD POLLUTION PREVENTION AND EROSION AND SEDIMENTATION CONTROL PLAN AND, IF APPLICABLE, THE STORMWATER POLLUTION PREVENTION PLAN REQUIRED BY THE NATIONAL POLLUTION DISCHARGE ELIMINATION SYSTEM CONSTRUCTION GENERAL PERMIT AS REQUIRED BY STORMWATER CONDITION 8. CONSTRUCTION PERIOD EROSION, SEDIMENTATION AND POLLUTION CONTROL MEASURES AND BEST MANAGEMENT PRACTICES (BMPS) SHALL REMAIN IN PLACE UNTIL THE SITE IS FULLY STABILIZED.
 b. NO STORMWATER RUNOFF MAY BE DISCHARGED TO THE POST-CONSTRUCTION STORMWATER BMPS UNLESS AND UNTIL A REGISTERED PROFESSIONAL ENGINEER PROVIDES A CERTIFICATION THAT:
  - ALL CONSTRUCTION PERIOD BMPS HAVE BEEN REMOVED OR WILL BE REMOVED BY A DATE CERTAIN SPECIFIED IN THE CERTIFICATION. FOR ANY CONSTRUCTION PERIOD BMPS INTENDED TO BE CONVERTED TO POST CONSTRUCTION OPERATION FOR STORMWATER ATTENUATION, RECHARGE, AND/OR TREATMENT, THE CONVERSION IS ALLOWED BY THE MASSDEP STORMWATER HANDBOOK BMP SPECIFICATIONS AND THAT THE BMP HAS BEEN PROPERLY CLEANED OR PREPARED FOR POST CONSTRUCTION OPERATION, INCLUDING REMOVAL OF ALL CONSTRUCTION PERIOD SEDIMENT TRAPPED IN INLET AND OUTLET CONTROL STRUCTURES;
  - AS-BUILT FINAL CONSTRUCTION BMP PLANS ARE INCLUDED, SIGNED AND STAMPED BY A REGISTERED PROFESSIONAL ENGINEER, CERTIFYING THE SITE IS FULLY STABILIZED;
  - ANY ILLICIT DISCHARGES TO THE STORMWATER MANAGEMENT SYSTEM HAVE BEEN REMOVED, AS PER THE REQUIREMENTS OF STORMWATER STANDARD 10;
  - ALL POST-CONSTRUCTION STORMWATER BMPS ARE INSTALLED IN ACCORDANCE WITH THE PLANS (INCLUDING ALL PLANTING PLANS) APPROVED BY THE ISSUING AUTHORITY, AND HAVE BEEN INSPECTED TO ENSURE THAT THEY ARE NOT DAMAGED AND THAT THEY ARE IN PROPER WORKING CONDITION;
  - ANY VEGETATION ASSOCIATED WITH POST-CONSTRUCTION BMPS IS SUITABLY ESTABLISHED TO WITHSTAND EROSION.
 c. THE LANDOWNER IS RESPONSIBLE FOR BMP MAINTENANCE UNTIL THE ISSUING AUTHORITY IS NOTIFIED THAT ANOTHER PARTY HAS LEGALLY ASSUMED RESPONSIBILITY FOR BMP MAINTENANCE. PRIOR TO REQUESTING A CERTIFICATE OF COMPLIANCE, OR PARTIAL CERTIFICATE OF COMPLIANCE, THE RESPONSIBLE PARTY (DEFINED IN GENERAL CONDITION 18(E)) SHALL EXECUTE AND SUBMIT TO THE ISSUING AUTHORITY AN OPERATION AND MAINTENANCE COMPLIANCE STATEMENT ("O&M STATEMENT") FOR THE STORMWATER BMPS IDENTIFYING THE PARTY RESPONSIBLE FOR IMPLEMENTING THE STORMWATER BMP OPERATION AND MAINTENANCE PLAN ("O&M PLAN") AND CERTIFYING THE FOLLOWING:
  - THE O&M PLAN IS COMPLETE AND WILL BE IMPLEMENTED UPON RECEIPT OF THE CERTIFICATE OF COMPLIANCE, AND
  - THE FUTURE RESPONSIBLE PARTIES SHALL BE NOTIFIED IN WRITING OF THEIR ONGOING LEGAL RESPONSIBILITY TO OPERATE AND MAINTAIN THE STORMWATER MANAGEMENT BMPS AND IMPLEMENT THE STORMWATER POLLUTION PREVENTION PLAN.
 d. POST-CONSTRUCTION POLLUTION PREVENTION AND SOURCE CONTROL SHALL BE IMPLEMENTED IN ACCORDANCE WITH THE LONG-TERM POLLUTION PREVENTION PLAN SECTION OF THE APPROVED STORMWATER REPORT AND, IF APPLICABLE, THE STORMWATER POLLUTION PREVENTION PLAN REQUIRED BY THE NATIONAL POLLUTION DISCHARGE ELIMINATION SYSTEM MULTI-SECTOR GENERAL PERMIT.
 e. UNLESS AND UNTIL ANOTHER PARTY ACCEPTS RESPONSIBILITY, THE LANDOWNER, OR OWNER OF ANY DRAINAGE EASEMENT, ASSUMES RESPONSIBILITY FOR MAINTAINING EACH BMP. TO OVERCOME THIS PRESUMPTION, THE LANDOWNER OF THE PROPERTY MUST SUBMIT TO THE ISSUING AUTHORITY A LEGALLY BINDING AGREEMENT OF RECORD, ACCEPTABLE TO THE ISSUING AUTHORITY, EVIDENCING THAT ANOTHER ENTITY HAS ACCEPTED RESPONSIBILITY FOR MAINTAINING THE BMP, AND THAT THE PROPOSED RESPONSIBLE PARTY SHALL BE TREATED AS A PERMITTEE FOR PURPOSES OF IMPLEMENTING THE REQUIREMENTS OF CONDITIONS 18(F) THROUGH 18(K) WITH RESPECT TO THAT BMP. ANY FAILURE OF THE PROPOSED RESPONSIBLE PARTY TO IMPLEMENT THE REQUIREMENTS OF CONDITIONS 18(F) THROUGH 18(K) WITH RESPECT TO THAT BMP SHALL BE A VIOLATION OF THE ORDER OF CONDITIONS OR CERTIFICATE OF COMPLIANCE. IN THE CASE OF STORMWATER BMPS THAT ARE SERVING MORE THAN ONE LOT, THE LEGALLY BINDING AGREEMENT SHALL ALSO IDENTIFY THE LOTS THAT WILL BE SERVICED BY THE STORMWATER BMPS. A PLAN AND EASEMENT DEED THAT GRANTS THE RESPONSIBLE PARTY ACCESS TO PERFORM THE REQUIRED OPERATION AND MAINTENANCE MUST BE SUBMITTED ALONG WITH THE LEGALLY BINDING AGREEMENT.
 f. THE RESPONSIBLE PARTY SHALL OPERATE AND MAINTAIN ALL STORMWATER BMPS IN ACCORDANCE WITH THE DESIGN PLANS, THE O&M PLAN, AND THE REQUIREMENTS OF THE MASSACHUSETTS STORMWATER HANDBOOK.
 g. THE RESPONSIBLE PARTY SHALL:
  - MAINTAIN AN OPERATION AND MAINTENANCE LOG FOR THE LAST THREE (3) CONSECUTIVE CALENDAR YEARS OF INSPECTIONS, REPAIRS, MAINTENANCE AND/OR REPLACEMENT OF THE STORMWATER MANAGEMENT SYSTEM OR ANY PART THEREOF, AND DISPOSAL (FOR DISPOSAL THE LOG SHALL INDICATE THE TYPE OF MATERIAL AND THE DISPOSAL LOCATION);
  - MAKE THE MAINTENANCE LOG AVAILABLE TO MASSDEP AND THE CONSERVATION COMMISSION ("COMMISSION") UPON REQUEST; AND
  - ALLOW MEMBERS AND AGENTS OF THE MASSDEP AND THE COMMISSION TO ENTER AND INSPECT THE SITE TO EVALUATE AND ENSURE THAT THE RESPONSIBLE PARTY IS IN COMPLIANCE WITH THE REQUIREMENTS FOR EACH BMP ESTABLISHED IN THE O&M PLAN APPROVED BY THE ISSUING AUTHORITY.
 h. ALL SEDIMENT OR OTHER CONTAMINANTS REMOVED FROM STORMWATER BMPS SHALL BE DISPOSED OF IN ACCORDANCE WITH ALL APPLICABLE FEDERAL, STATE, AND LOCAL LAWS AND REGULATIONS.
 i. ILLICIT DISCHARGES TO THE STORMWATER MANAGEMENT SYSTEM AS DEFINED IN 310 CMR 10.04 ARE PROHIBITED.
 j. THE STORMWATER MANAGEMENT SYSTEM APPROVED IN THE ORDER OF CONDITIONS SHALL NOT BE CHANGED WITHOUT THE PRIOR WRITTEN APPROVAL OF THE ISSUING AUTHORITY.
 k. AREAS DESIGNATED AS QUALIFYING PERVIOUS AREAS FOR THE PURPOSE OF THE LOW IMPACT SITE DESIGN CREDIT (AS DEFINED IN THE MASSDEP STORMWATER HANDBOOK, VOLUME 3, CHAPTER 1, LOW IMPACT DEVELOPMENT SITE DESIGN CREDITS) SHALL NOT BE ALTERED WITHOUT THE PRIOR WRITTEN APPROVAL OF THE ISSUING AUTHORITY.
 l. ACCESS FOR MAINTENANCE, REPAIR, AND/OR REPLACEMENT OF BMPS SHALL NOT BE WITHHELD. ANY FENCING CONSTRUCTED AROUND STORMWATER BMPS SHALL INCLUDE ACCESS GATES AND SHALL BE AT LEAST SIX INCHES ABOVE GRADE TO ALLOW FOR WILDLIFE PASSAGE. SPECIAL CONDITIONS. SEE \ADDITIONAL CONDITIONS.

20. FOR TEST PROJECTS SUBJECT TO 310 CMR 10.05(11), THE APPLICANT SHALL ALSO IMPLEMENT THE MONITORING PLAN AND THE RESTORATION PLAN SUBMITTED WITH THE NOTICE OF INTENT. IF THE CONSERVATION COMMISSION OR DEPARTMENT DETERMINES THAT THE TEST PROJECT THREATENS THE PUBLIC HEALTH, SAFETY OR THE ENVIRONMENT, THE APPLICANT SHALL IMPLEMENT THE REMOVAL PLAN SUBMITTED WITH THE NOTICE OF INTENT OR MODIFY THE PROJECT AS DIRECTED BY THE CONSERVATION COMMISSION OR THE DEPARTMENT.

ADDITIONAL GENERAL CONDITIONS

20. AFTER THE EXPIRATION OF THE 10-DAY APPEAL PERIOD, AND, IF NO REQUEST FOR APPEAL HAS BEEN FILED WITH THE DEPARTMENT OF ENVIRONMENTAL PROTECTION, RECORD THIS ORDER AT THE REGISTRY OF DEEDS AND RETURN A COPY (PROOF) OF RECORDED FRONT PAGE TO THE COMMISSION.

** NO WORK SHALL START UNTIL THIS ORDER OF CONDITIONS IS RECORDED AND A COPY IS RECEIVED BY THE COMMISSION. **

21. THIS ORDER SHALL APPLY TO ANY SUCCESSOR IN CONTROL OR SUCCESSOR IN INTEREST OF THE PROPERTY DESCRIBED IN THE NOTICE OF INTENT AND ACCOMPANYING PLANS. THESE OBLIGATIONS SHALL BE EXPRESSED IN COVENANTS IN ALL DEEDS TO SUCCEEDING OWNERS OF PORTIONS OF THE PROPERTY.

22. THE COMMISSION SHALL BE NOTIFIED IN WRITING OF ALL TRANSFERS OF TITLE OF ANY PORTION OF PROPERTY THAT TAKES PLACE PRIOR TO ISSUANCE OF THE CERTIFICATE OF COMPLIANCE.

23. ALL PROPOSED WORK SHALL BE PERFORMED IN ACCORDANCE WITH THE NOTICE OF INTENT FILED FEB. 11, 2015 AND THE PLANS DATED MARCH 26, 2015.

24. THE CONSERVATION COMMISSION, THE BOXBOROUGH BUILDING INSPECTOR, ARBORISTS, CONSULTANTS, OR CONSERVATION EXPERTS, AS AGENTS OF THE COMMISSION, OR THE DEPARTMENT OF ENVIRONMENTAL PROTECTION RESERVES THE RIGHT TO ENTER AND INSPECT THE PROPERTY AT ALL REASONABLE TIMES, UNTIL A CERTIFICATE OF COMPLIANCE IS ISSUED TO EVALUATE COMPLIANCE WITH THIS ORDER OF CONDITIONS, THE ACT, THE BOXBOROUGH WETLAND BYLAW, 310 CMR 10.00 AND BOXBOROUGH WETLAND REGULATIONS, AND MAY ACQUIRE ANY INFORMATION, MEASUREMENTS, PHOTOGRAPHS, OBSERVATIONS, AND/OR MATERIALS, OR MAY REQUIRE THE SUBMITTAL OF ANY DATA OR INFORMATION DEEMED NECESSARY BY THE COMMISSION FOR THAT EVALUATION. FURTHER, WORK SHALL BE HALTED ON THE SITE IF THE COMMISSION, AGENT OR DEP DETERMINES THAT ANY OF THE WORK IS NOT IN COMPLIANCE WITH THIS ORDER OF CONDITIONS. WORK SHALL NOT RESUME UNTIL THE COMMISSION IS SATISFIED THAT THE WORK WILL COMPLY, AND HAS SO NOTIFIED THE APPLICANT IN WRITING.

25. THE COMMISSION RESERVES THE RIGHT TO AMEND THIS ORDER OF CONDITIONS AFTER A LEGALLY ADVERTISED PUBLIC HEARING IF PLANS OR CIRCUMSTANCES ARE CHANGED OR IF NEW CONDITIONS OR INFORMATION SO WARRANT.

UPON COMPLETION OF THIS PROJECT, THE APPLICANT SHALL SUBMIT THE FOLLOWING TO THE CONSERVATION COMMISSION TO RECEIVE A CERTIFICATE OF COMPLIANCE:

- DEP WPA FORM 8A REQUEST FOR CERTIFICATE OF COMPLIANCE
- A WRITTEN STATEMENT FROM THE APPLICANT CERTIFYING THAT THE WORK HAS BEEN CONDUCTED AS SHOWN ON THE PLAN(S) AND DOCUMENTS REFERENCED ABOVE, AND AS CONDITIONED BY THE COMMISSION.
- A WRITTEN STATEMENT FROM A REGISTERED PROFESSIONAL ENGINEER OF THE COMMONWEALTH CERTIFYING THAT THE WORK HAS BEEN CONDUCTED AS SHOWN ON THE PLAN(S) AND DOCUMENTS REFERENCED ABOVE, AND AS CONDITIONED BY THE COMMISSION.
- AN "AS-BUILT" PLAN PREPARED AND SIGNED AND STAMPED BY A REGISTERED PROFESSIONAL ENGINEER OR LAND SURVEYOR OF THE COMMONWEALTH FOR THE PUBLIC RECORD.

26. THE PERPETUAL CONDITIONS LISTED ON PAGE 7G AND 7H OF 10 SHALL CONTINUE IN FORCE BEYOND THE CERTIFICATE OF COMPLIANCE IN PERPETUITY AND SHALL BE REFERRED TO IN ALL FUTURE DEEDS TO THIS PROPERTY.

27. THE TOTAL FILLING OF BORDERING VEGETATED WETLAND AS DEFINED IN 310 CMR 10.55 SHALL BE LIMITED TO 5,000 SQUARE FEET CUMULATIVELY FOR THE ENTIRE DEVELOPMENT, UNLESS SPECIFICALLY APPROVED IN THIS ORDER OF CONDITIONS AND AFTER REVIEW UNDER THE WATER QUALITY CERTIFICATION REGULATORY PROGRAM. ANY BORDERING VEGETATED WETLAND FILLING UP TO 5,000 SQUARE FEET NOT APPROVED IN THIS ORDER OF CONDITIONS WILL REQUIRE THE FILING OF A NEW NOTICE OF INTENT, AND IF ALLOWED, SHALL BE SUBJECT TO WETLAND REPLICATION AS STIPULATED BY THE REGULATIONS.

28. THIS ORDER SHALL PERTAIN TO THE ROADWAYS AND THEIR APPURTENANCES, DRIVEWAYS, DRAINAGE FACILITIES AND WATER MAIN CROSSINGS. ANY ADDITIONAL INDIVIDUAL LOT CONSTRUCTION UNDER THE COMMISSION'S JURISDICTION SHALL HAVE INDIVIDUAL NOTICES OF INTENT AND/OR REQUEST FOR DETERMINATION OF APPLICABILITY FILED.

PRE-CONSTRUCTION REQUIREMENTS

29. IF THERE ARE ANY CHANGES TO THE PLANS AS SUBMITTED, THE APPLICANT SHALL HAVE THE RESPONSIBILITY TO SUBMIT REVISED PLANS SHOWING ALL CHANGES TO THE COMMISSION FOR REVIEW. THIS INCLUDES CHANGES REQUIRED BY THE COMMISSION, OTHER TOWN AND/OR STATE AGENCIES AS WELL AS THOSE INTRODUCED BY THE APPLICANT. NO WORK MAY START UNTIL THE COMMISSION HAS COMPLETED ITS REVIEW AND NOTIFIED THE APPLICANT IN WRITING.

30. A COMPLETE COPY OF THIS ORDER, INCLUDING ITS DRAWINGS, SPECIAL CONDITIONS, AND ANY AMENDMENTS SHALL BE MAINTAINED AT THE WORK SITE WHENEVER WORK IS BEING PERFORMED. THE APPLICANT SHALL ASSURE THAT ALL CONTRACTORS, SUBCONTRACTORS AND OTHER PERSONNEL PERFORMING WORK IN THE RESOURCE AREA ARE FULLY AWARE OF THE TERMS AND CONDITIONS OF THE ORDER. A COMPLETE COPY OF THIS ORDER AND THE PROJECT PLANS SHALL BE GIVEN TO EVERY CONTRACTOR AND SUBCONTRACTOR PERFORMING THE WORK DEFINED AND DESCRIBED HERE.

31. PRIOR TO THE START OF ANY ACTIVITY, THE APPLICANT SHALL SCHEDULE A PRE-CONSTRUCTION CONFERENCE TO BE HELD ON THE SITE, INVOLVING THE CONTRACTOR CONDUCTING THE WORK, THE APPLICANT OR ITS AUTHORIZED REPRESENTATIVE, AND A MEMBER OR AGENT OF THE CONSERVATION COMMISSION, TO ENSURE THAT THE REQUIREMENTS OF THIS ORDER ARE UNDERSTOOD BY ALL PARTIES. A REASONABLE PERIOD OF TIME SHALL BE PROVIDED AS NOTICE OF THE PRE-CONSTRUCTION MEETING.

32. A SET OF PLANS FOR THIS PROJECT SHALL BE SUBMITTED TO THE BUILDING INSPECTOR WHO MAY ACT AS THE COMMISSION'S AGENT.

33. THE APPLICANT SHALL INFORM THE COMMISSION IN WRITING OF THE NAME, MAILING ADDRESS, E-MAIL ADDRESS, BUSINESS AND HOME TELEPHONE NUMBER OF THE PROJECT SUPERVISOR WHO WILL BE RESPONSIBLE FOR ENSURING ON-SITE COMPLIANCE WITH THIS ORDER. THE APPLICANT WILL ALSO SUPPLY THE NAMES AND CONTACT INFORMATION FOR ALL THE CONTRACTORS AND SUBCONTRACTORS.

34. ALL CONTRACTORS WORKING IN THE RESOURCE AREA SHALL BE REQUIRED TO READ THIS ORDER OF CONDITIONS AND SIGN A DOCUMENT ACKNOWLEDGING THEIR READING AND UNDERSTANDING THE ORDER OF CONDITIONS. THIS 'ACKNOWLEDGEMENT DOCUMENT' SHALL CONTAIN THE PRINTED NAME OF THE CONTRACTOR/SUBCONTRACTOR, ADDRESS, PHONE NUMBER, DATE AND SIGNATURE. ONE COPY OF THE SIGNED ACKNOWLEDGEMENT DOCUMENT SHALL BE KEPT ON SITE AND A SECOND COPY SHALL BE FORWARDED TO THE CONSERVATION COMMISSION BEFORE SITE CLEARING AND EXCAVATION.

35. PRIOR TO CONSTRUCTION THE APPLICANT OR CONTRACTOR SHALL SUBMIT TO THE BOXBOROUGH CONSERVATION COMMISSION A COPY OF THE SWPPP AND A COPY OF THE GENERAL PERMIT NPDES FROM THE EPA.

EROSION CONTROLS

36. BEFORE THE START OF ANY SITE WORK (E.G. EARTH DISTURBANCE, CLEARING OF VEGETATION, ETC.), APPROPRIATE SEDIMENTATION AND EROSION CONTROL DEVICES SHALL BE INSTALLED AS SHOWN ON THE PLANS REFERENCED IN THE GENERAL CONDITIONS SECTION.

EROSION CONTROLS (CONT.)

37. ON SLOPES OF 25% (4:1) OR LESS GRADIENT, WIRE-REINFORCED SILT FENCING, STAGGERED STRAW BALES WITH A SIX- INCH OVERLAP OR BUTTED STRAW BALES BACKED BY SILT FENCE MAY BE USED.

38. SLOPES GREATER THAN 25% (4:1) REQUIRE BUTTING DOUBLE STAKED STRAW BALES BACKED BY A SILT FENCE DUG-IN 6 INCHES INTO THE GROUND.

39. ALL SILT FENCING WILL BE DUG-IN 6 INCHES INTO THE GROUND. SPACE STAKES A MAXIMUM OF 8 FEET IF WIRE-REINFORCED FENCING IS USED AND A MAXIMUM OF 6 FEET IF THE FENCING IS NOT REINFORCED. ALL STRAW BALES WILL BE DOUBLE STAKED INTO THE GROUND. STRAW BALES SHALL BE DRY, TIGHT, CONSISTENT "STALK" MATERIAL AND FREE OF SEEDS.

40. FOLLOWING THE INSTALLATION OF THE SEDIMENTATION AND EROSION CONTROL DEVICES BUT PRIOR TO THE START OF ANY OTHER CONSTRUCTION ACTIVITY, THE COMMISSION SHALL BE NOTIFIED IN WRITING AND SHALL HAVE FIVE (5) WORKING DAYS TO INSPECT THIS INSTALLATION BEFORE ANY SITE WORK STARTS. IF THE APPLICANT IS NOT OTHERWISE NOTIFIED BY THE COMMISSION OF THE ACCEPTANCE OR REJECTION OF THE INSTALLATION, CONSTRUCTION MAY BEGIN AT THE END OF THE 5 WORKING DAYS.

41. PRIOR TO ANY WORK ON SITE, THE PROPOSED LIMITS OF WORK SHALL BE DELINEATED WITH 5-FOOT HIGH STAKES SPRAY PAINTED BRIGHT ORANGE PLACED EVERY 25 FEET WITH ATTACHED SIGNS CLEARLY DISPLAYING "NO ACTIVITY BEYOND THIS POINT PER ORDER OF THE CONSERVATION COMMISSION". SUCH MARKERS SHALL BE CHECKED AND REPLACED AS NECESSARY AND SHALL BE MAINTAINED UNTIL ALL CONSTRUCTION IS COMPLETE. WORKERS SHALL BE INFORMED THAT NO USE OF MACHINERY, STORAGE OF MACHINERY OR MATERIALS, STOCKPILING OF SOIL OR CONSTRUCTION ACTIVITY IS TO OCCUR BEYOND THIS LINE AT ANY TIME.

CONSTRUCTION MANAGEMENT

EROSION CONTROL

42. AN ADEQUATE STOCKPILE OF EROSION CONTROL MATERIALS SHALL BE ON SITE AT ALL TIMES FOR EMERGENCY OR ROUTINE REPLACEMENT AND SHALL INCLUDE MATERIALS TO REPAIR SILT FENCES, STRAW BALES, STONE RIP-RAP FILTER DIKES OR ANY OTHER DEVICES PLANNED FOR USE DURING CONSTRUCTION.

43. THE CONSERVATION COMMISSION RESERVES THE RIGHT TO IMPOSE ADDITIONAL CONDITIONS ON PORTIONS OF THIS PROJECT TO MITIGATE ANY IMPACTS WHICH COULD RESULT FROM SITE EROSION, OR ANY NOTICEABLE DEGRADATION OF SURFACE WATER QUALITY DISCHARGING FROM THE SITE.

44. EROSION CONTROL DEVICES MAY BE MODIFIED BASED ON EXPERIENCE AT THE SITE. ALL SUCH DEVICES SHALL BE INSPECTED, CLEANED, AND/OR REPLACED DURING CONSTRUCTION AND SHALL REMAIN IN PLACE UNTIL SUCH TIME STABILIZATION OF ALL AREAS THAT MAY IMPACT RESOURCE AREAS IS PERMANENT. THESE DEVICES SHALL BE INSPECTED TO ASSURE MAXIMUM CONTROL HAS BEEN PROVIDED AFTER ANY RAINFALL.

45. ANY STRAW BALES THAT DETERIORATE DURING THE ACTIVITY PERIOD ARE TO BE REPLACED IMMEDIATELY. AT THE CLOSE OF EACH CONSTRUCTION DAY, AND ESPECIALLY PRIOR TO WEEKENDS, THE APPLICANT SHALL ASSUME RESPONSIBILITY FOR MONITORING ALL EROSION AND SEDIMENTATION BARRIERS TO INSURE THAT ALL BARRIERS ARE IN PLACE, SECURED, REINFORCED AND PROPERLY MAINTAINED AT DAY'S END. IN THE EVENT THAT AN UNCONTROLLABLE EMERGENCY OCCURS, SUCH AS A HEAVY RAINSTORM, CAUSING EROSION AND SEDIMENTATION BREAKOUT, THE APPLICANT SHALL RESTORE SUCH BARRIERS TO THE STANDARDS OUTLINED IN THE ORDER AND THE SATISFACTION OF THE COMMISSION. THE STRAW BALES SHALL BE IN PLACE UNTIL REVEGETATION TAKES PLACE.

46. ALL EROSION CONTROL AND SEDIMENTATION PREVENTION MEASURES SHALL REMAIN IN PLACE AND BE MAINTAINED FOR THE PURPOSE FOR WHICH THEY WERE INSTALLED UNTIL THE AREA UPGRADIENT IS PERMANENTLY STABILIZED, INSPECTED AND APPROVED BY THE COMMISSION. THE APPLICANT SHALL REMOVE THE EROSION CONTROL AND SEDIMENTATION DEVICES BY THE END OF CONSTRUCTION, BEFORE APPLYING FOR THE CERTIFICATE OF COMPLIANCE.

47. SITE GRADING AND CONSTRUCTION SHALL BE SCHEDULED TO AVOID PERIODS OF HIGH SURFACE WATER. ONCE BEGUN, GRADING AND CONSTRUCTION SHALL MOVE UNINTERRUPTED TO COMPLETION TO AVOID EROSION AND SILTATION OF THE WETLANDS.

STABILIZATION

48. AS SOON AS GRADING AND/OR CONSTRUCTION IN THE BUFFER ZONE IS COMPLETED, ALL DISTURBED AREAS MUST BE PERMANENTLY STABILIZED WITH VEGETATIVE COVER. ALL DISTURBED AREAS, SLOPES AND PROPOSED LANDSCAPE AREAS SHALL BE LOAMED AND SEEDED OR STABILIZED THROUGH THE USE OF MULCH COVER, EROSION CONTROL BLANKETS OR OTHER APPROVED MEANS. ALL DISTURBED AREAS SHALL BE GRADED, LOAMED AND SEEDED PRIOR TO NOVEMBER 1 OF EACH YEAR. NO DISTURBED AREAS OR STOCKPILED MATERIAL WILL BE LEFT UNPROTECTED DURING THE WINTER. IF WEATHER CONDITIONS DO NOT ALLOW PERMANENT STABILIZATION, THEN APPROPRIATE TEMPORARY STABILIZATION MEASURES SHALL BE USED UNTIL PERMANENT STABILIZATION CAN BE ACHIEVED.

49. SUBSEQUENT TO SEEDING, DISTURBED AREAS WILL BE COVERED WITH STRAW MULCH, EROSION CONTROL BLANKET OR NETTING OR OTHER SUITABLE MATERIAL IN ORDER TO PROVIDE AN ADEQUATE SURFACE PROTECTION UNTIL SEED GERMINATION. PREFERENCE SHOULD BE GIVEN TO EROSION CONTROL NETTING WITH BIODEGRADABLE STITCHING.

50. AFTER EROSION CONTROL DEVICES ARE REMOVED AS PERMITTED BY THE CONSERVATION COMMISSION, THE AREAS COVERED BY THE EROSION CONTROL MEASURES SHALL BE RESTORED TO MATCH ADJACENT CONDITION.

51. FOR RIPRAP EMBANKMENTS, RIPRAP MATERIAL SHALL BE CLEAN AND FREE OF TRASH, TREE STUMPS, ROOTS AND OTHER DELETERIOUS MATERIAL.

52. TEMPORARY ROADWAYS SHALL BE COVERED WITH CRUSHED STONE OF UNIFORM SIZE OR EROSION CONTROL MATS. SAID STONE SHALL BE WASHED, GRADED AND FREE FROM ORGANIC MATERIALS.

EQUIPMENT AND STORAGE

53. MOTORIZED EQUIPMENT, WELL DRILLING EQUIPMENT, OR ANY OTHER MACHINERY INVOLVED IN THE WORK SHALL BE PERMITTED IN THE BUFFER ZONE AND/OR WETLANDS ONLY WHEN ACTUALLY ENGAGED IN THAT WORK AND MUST BE REMOVED FROM THE BUFFER ZONE AND/OR WETLANDS FOR OVERNIGHT OR WEEKEND STORAGE. NO MAINTENANCE OR REFUELING SHALL TAKE PLACE IN THE BUFFER ZONE AND/OR WETLANDS. THIS INCLUDES, BUT IS NOT LIMITED TO FUELING, LUBRICATING AND FLUID REPLACEMENT.

54. EQUIPMENT FOR FUEL STORAGE AND REFUELING OPERATIONS SHALL BE LOCATED IN AN UPLAND AREA GREATER THAN 100 FEET FROM THE LIMITS OF WETLAND AREAS.

55. UNDER NO CONDITIONS SHALL OPERATION OF EQUIPMENT, STORAGE MATERIALS, STOCKPILING OF SOIL OR OTHER TEMPORARY SITE DISTURBANCE TAKE PLACE ON THE WETLAND SIDE OF THE LIMIT OF WORK LINE.

56. ALL EQUIPMENT USED IN THIS PROJECT SHALL WORK FROM UPLAND AREAS AND SHALL NOT ENTER THE WETLANDS AT ANY TIME.

OTHER

57. THERE SHALL BE NO CONSTRUCTION REFUSE BURIED WITHIN THE 100-FOOT WETLAND BUFFER ZONE ON THE PROJECT SITE.

58. NO WORK OR ACTIVITY INCLUDING THE CUTTING OF VEGETATION SHALL TAKE PLACE IN A WETLAND AREA OR BUFFER ZONE OTHER THAN THAT SPECIFICALLY ALLOWED UNDER THIS ORDER OF CONDITIONS.

59. ONLY CLEAN FILL SHALL BE USED ON THE SITE, I.E. CLEAN GRANULAR MATERIALS FREE OF ORGANIC MATTER, LARGE STONES, MASONRY, STUMPS, ASPHALT OR WASTE MATERIAL.

60. NO TRASH DUMPSTERS WILL BE ALLOWED WITHIN THE 100-FOOT WETLAND BUFFER ZONE OR BANKS DURING CONSTRUCTION.

61. ALL UTILITY POLES SHALL BE TREATED WITH A NON-LEACHING WOOD PRESERVATIVE. THE USE OF CREOSOTE IS EXPRESSLY PROHIBITED. USE OF A WOOD PRESERVATIVE OTHER THAN CCA SALTS SHALL REQUIRE PRIOR WRITTEN NOTIFICATION TO THE COMMISSION FIVE (5) DAYS IN ADVANCE OF PLACEMENT.

62. THE APPLICANT SHALL PROVIDE THE COMMISSION WITH A COPY OF THE FINAL CONSTRUCTION AND OPERATION PLANS FOR THE WASTEWATER FACILITY.

63. THE APPLICANT SHALL REGISTER ALL RECHARGE INJECTION WELLS WITH MASS DEP. THE APPLICANT SHALL PROVIDE A COPY OF THIS SUBMITTAL TO THE COMMISSION.

STREAM CROSSINGS

64. PLANS AND CONSTRUCTION DETAILS OF ANY TEMPORARY CROSSING SHALL BE SUBMITTED TO THE CONSERVATION COMMISSION FOR APPROVAL PRIOR TO INITIATION OF THE WORK.

65. STREAM CROSSING SHALL BE DONE DURING LOW FLOW PERIODS, NORMALLY JULY, AUGUST AND EARLY SEPTEMBER. GREAT CARE SHALL BE TAKEN TO PREVENT EROSION AND SILTATION DURING HEAVY RAIN DURING CONSTRUCTION AT ANY TIME OF YEAR.

66. ADEQUATE AND APPROPRIATE EROSION CONTROLS OR CHECK DAMS NOT OF FREE EARTH FILL SHALL BE INSTALLED ON THE DOWNSTREAM SIDE OF THE WORK SITE TO PROTECT WATER QUALITY IN THE STREAM DURING CONSTRUCTION.

STORMWATER MANAGEMENT

67. THERE SHALL BE NO SEDIMENTATION INTO WETLANDS OR WATER BODIES FROM DISCHARGE PIPES OR SURFACE RUNOFF LEAVING THE SITE.

68. THE STORM DRAINAGE SYSTEM, DETENTION BASINS, AND COMPENSATORY STORAGE AREAS SHALL BE CONSTRUCTED AND FUNCTIONING AS PART OF THE INITIAL PROJECT PHASE.

69. IMMEDIATELY UPON THE INSTALLATION OF THE HEADWALLS AND RIPRAP AND THE CONSTRUCTION OF CATCH BASINS, DRAIN INLETS AND ANY OTHER DRAINAGE COLLECTION STRUCTURE, EROSION DEVICE, E.G. STRAW BALES, SHALL BE SET AROUND THE INLET TO PREVENT SEDIMENT FROM ENTERING THE DRAINAGE SYSTEM.

FLOOD STORAGE

COMPENSATORY FLOOD STORAGE SHALL BE CONSTRUCTED PRIOR TO ANY FILLING OF LAND SUBJECT TO FLOODING.

WILDLIFE

WHERE EROSION CONTROLS HAVE BEEN PLACED IN AREAS BETWEEN UPLAND AND VERNAL POOLS, EXPOSED SOILS SHALL BE STABILIZED, AND SILT FENCING OR OTHER DEVICES THAT COULD BLOCK MIGRATION OF AMPHIBIANS TO AND FROM THE POOLS SHALL BE REMOVED, NO LATER THAN MARCH 1 IF CONSTRUCTION HAS BEEN OCCURRING DURING THE WINTER, AND NO LATER THAN SEPTEMBER 1 IF CONSTRUCTION HAS BEEN OCCURRING DURING THE SUMMER. IF SOILS WILL NOT BE STABILIZED BY THESE DATES, TEMPORARY STABILIZATION MEASURES SHALL BE EMPLACED AND SEDIMENTATION BARRIERS SHALL BE DESIGNED TO PROVIDE A GRADUAL SLOPE OR BERM OVER WHICH AMPHIBIANS MAY PASS. EROSION CONTROL DEVICES SHALL NOT BLOCK PASSAGE BETWEEN UPLANDS AND VERNAL POOLS BETWEEN THE DATES OF MARCH 1 AND JUNE 1, NOR BETWEEN SEPTEMBER 1 AND OCTOBER 15.

PERPETUAL CONDITIONS

70. NO FURTHER PERMANENT STRUCTURE OF ANY KIND SHALL EVER BE PERMITTED WITHIN THE 100-FOOT WETLAND BUFFER ZONE. NO ADDITIONAL ALTERATIONS OF ANY KIND WITHIN THE WETLANDS AND THE BUFFER ZONE WILL BE PERMITTED WITHOUT PRIOR APPROVAL OF THE CONSERVATION COMMISSION.

71. NO DE-ICING CHEMICALS SHALL BE USED WHERE RUNOFF / DRAINAGE WILL DISCHARGE INTO THE WETLANDS. THIS CONDITION SHALL REMAIN IN PERPETUITY AND SHALL BE RECORDED AS SUCH ON THE CERTIFICATE OF COMPLIANCE. NO DE-ICING CHEMICALS SHALL BE USED ON ANY WALK, DRIVE, PARKING LOT OR PRIVATE ROAD EXCEPT DURING SEVERE ICE STORM. ANY ARRANGEMENT FOR SNOW REMOVAL SHALL SO STIPULATE.

72. DUMPING OF LAWN CLIPPINGS, OTHER PLANTINGS, AND USED CHRISTMAS TREES SHALL NOT BE PERMITTED THE ALRA. IT IS THE PROPERTY OWNERS' RESPONSIBILITY TO INFORM LAWN SERVICE PROVIDERS.

73. NO HERBICIDES OR PESTICIDES SHALL BE USED ON THIS SITE WITHIN THE100-FOOT WETLAND BUFFER ZONE. THIS CONDITION SHALL REMAIN IN FORCE PERMANENTLY AND SHALL BE RECORDED AS SUCH ON THE CERTIFICATE OF COMPLIANCE.

74. FERTILIZATION AND LIMING OF SOILS ON THIS SITE SHALL NOT TAKE PLACE WITHIN THE 100-FOOT WETLAND BUFFER ZONE.

75. OTHER THAN THE OPERATION OF THE WATER SUPPLY SYSTEM AND THE WASTE WATER TREATMENT SYSTEM, THERE SHALL BE NO STORAGE OF CHEMICALS, OIL, FUEL, FERTILIZERS OR OTHER POTENTIALLY HAZARDOUS MATERIAL WITHIN THE WETLANDS OR WITHIN THE 100-FOOT WETLAND BUFFER ZONE.

76. EACH YEAR THE APPLICANT OR CURRENT PROPERTY OWNER SHALL PROVIDE TO THE COMMISSION AND THE FIRE DEPARTMENT A LIST OF CHEMICALS USED IN THE WASTEWATER TREATMENT FACILITY, INCLUDING THE STORAGE LOCATIONS OF THESE CHEMICALS.

77. THE OWNER(S) OF THE SUBDIVISION ROAD SHALL BE RESPONSIBLE FOR ANY MAINTENANCE OF OR CORRECTIVE MEASURES DEEMED NECESSARY FOR THE DRAINAGE SYSTEM. THIS SHALL BE A CONTINUING CONDITION.

78. THE MAINTENANCE OR REPAIR OF DETENTION BASINS, SUPPORTING DRAINAGE SYSTEMS, STORMWATER BEST MANAGEMENT PRACTICES OTHER THAN THOSE IN THE PUBLIC WAY OR AN EASEMENT TO THE TOWN OF BOXBOROUGH HIGHWAY DEPARTMENT SHALL BE THE RESPONSIBILITY OF THE APPLICANT/PROPERTY OWNER. THE DESIGN CAPACITY, STORMWATER MANAGEMENT TREATMENT CAPACITY AND STRUCTURAL INTEGRITY OF THESE FACILITIES MUST BE MAINTAINED. THE BASINS SHALL BE KEPT FREE OF ANY LITTER, REFUSE, OR OTHER EXTRANEOUS MATTER.

79. IN ACCORDANCE WITH A PLAN SUBMITTED TO AND APPROVED BY THE CONSERVATION COMMISSION, REGULAR MAINTENANCE (AND REPAIR AS NEEDED) SHALL BE PERFORMED BY THE APPLICANT WITH REPORTS TO THE COMMISSION AS SPECIFIED IN THIS PLAN. THE CONSERVATION COMMISSION SHALL BE NOTIFIED IN WRITING, WHEN ANY MAINTENANCE FUNCTIONS THAT MAY IMPACT THE WETLANDS, SUCH AS, BUT NOT LIMITED TO, REPLACING BACKFILL AND REPAIRING DRAINS AND TERRACES, ARE TO BE PERFORMED.

80. INVASIVE PLANTS SHALL BE REMOVED WITHIN 50 FEET OF ALL STREAM CROSSINGS. THIS WILL FACILITATE THE MONITORING AND CONTROL OF BEAVER ACTIVITY THAT MIGHT BLOCK CULVERTS AND CAUSE FLOODING.

JPI

WAIVERS OF TOWN OF BOXBOROUGH ZONING BYLAWS:
4.4003(1) USE REGULATION SCHEDULE
WAIVER TO PERMIT SINGLE-FAMILY AND MULTI-FAMILY ATTACHED RESIDENTIAL USES NOT OTHERWISE PERMITTED IN THE INDUSTRIAL COMMERCIAL DISTRICT (I.E., THE PROPOSED TWO (2) SINGLE FAMILY DWELLINGS AND THE PROPOSED 244 APARTMENT UNITS IN ELEVEN (11) MULTI-FAMILY BUILDINGS, FOR A TOTAL OF 246 UNITS)
4.4033 USE REGULATION SCHEDULE
WAIVER TO PERMIT A USE WHICH IS NOT OTHERWISE ACCESSORY TO INDUSTRIAL-COMMERCIAL USES, I.E., A CLUBHOUSE/RENTAL OFFICE.
5.5002 DIMENSIONAL SCHEDULE
WAIVER OF REQUIREMENT FOR A MAXIMUM FLOOR AREA RATIO OF 0.10.
6.6004 SURFACE, CIRCULATION, AND LANDSCAPING REQUIREMENTS
WAIVER OF REQUIREMENT THAT AUTOMOBILE PARKING SPACES SHALL NOT BE LESS THAN 10 FEET BY 20 FEET, IN ORDER TO ALLOW PARKING SPACE OF 9 FEET BY 18 FEET.
6.6103 MULTIPLE BUILDINGS ON ONE LOT
WAIVER OF REQUIREMENT THAT WHERE MORE THAN ONE BUILDING IS PROPOSED TO BE BUILT UPON A LOT, THE PLAN SHALL BE REVIEWED BY THE PLANNING BOARD REGARDING ADEQUACY OF ACCESS TO BUILDINGS, IN ORDER TO SUBSTITUTE THE PERMISSION FROM THE ZONING BOARD OF APPEALS GRANTED UNDER THIS COMPREHENSIVE PERMIT.
6.6105 PRIVATE/COMMON DRIVEWAYS IN THE BUSINESS, BUSINESS 1, OFFICE PARK, TOWN CENTER, AND INDUSTRIAL-COMMERCIAL DISTRICTS
WAIVER OF THE REQUIREMENT THAT PRIVATE/COMMON DRIVEWAYS ARE ALLOWED IN THE IC DISTRICT ONLY BY SPECIAL PERMIT OF THE PLANNING BOARD, IN ORDER TO SUBSTITUTE THE PERMISSION FROM THE ZONING BOARD OF APPEALS UNDER THIS COMPREHENSIVE PERMIT.
7.7004(G) SPECIAL REGULATIONS AQUIFER PROTECTION DISTRICT
WAIVER OF REQUIREMENT THAT THERE BE NO DISPOSAL OF SANITARY WASTE TO A SUBSURFACE DISPOSAL SYSTEM IN QUANTITIES EXCEEDING 440 GALLONS PER DAY PER ACRE OF AQUIFER PROTECTION DISTRICT CONTAINED WITHIN THE LOT, IN ORDER TO ALLOW QUANTITIES OF UP TO 750 GALLONS PER DAY PER ACRE OF THE SITE IN THE AQUIFER PROTECTION DISTRICT IN THE EVENT RESERVE LEACHING FIELDS ARE USED.
7.7007(1) DESIGN REQUIREMENTS
WAIVER OF REQUIREMENT THAT WHERE A PORTION OF THE SITE IS LOCATED OUTSIDE OF THE AQUIFER PROTECTION DISTRICT, POTENTIAL POLLUTION SOURCES, SUCH AS ON SITE DISPOSAL SYSTEMS, SHOULD BE LOCATED OUTSIDE THE DISTRICT BOUNDARIES, IN ORDER TO ALLOW RESERVE LEACHING FIELD TO BE LOCATED WITHIN THE AQUIFER PROTECTION DISTRICT.
7.7104(G) AND (H) W-DISTRICT USE REGULATIONS
WAIVER OF REQUIREMENTS FOR SPECIAL PERMIT FOR USE IN THE W-DISTRICT, IN ORDER TO SUBSTITUTE APPROVAL UNDER THIS COMPREHENSIVE PERMIT.
7.7106 SUBMITTALS
WAIVER OF REQUIREMENTS FOR SPECIAL PERMIT APPLICATIONS TO BE PREPARED AND SUBMITTED TO THE BOARD OF APPEALS, IN ORDER TO PERMIT ONE COMPREHENSIVE SUBMISSION TO THE BOARD TO BE ACTED ON UNDER G.L. C. 40B, §21.
7.7109 PROCEDURES
WAIVER OF REQUIREMENT FOR SPECIAL PERMIT APPLICATIONS TO BE PREPARED AND SUBMITTED TO THE BOARD OF APPEALS IN ORDER TO PERMIT A SINGLE COMPREHENSIVE PERMIT SUBMISSION TO THE BOARD TO BE ACTED UPON UNDER G.L. C.40B, §21.
7.7200 LANDS BORDERING THE W-DISTRICT
WAIVER OF REQUIREMENT FOR SPECIAL PERMIT TO PLACE STRUCTURES WITHIN ONE HUNDRED (100') FEET OF THE W-DISTRICT, IN ORDER TO PERMIT CONSTRUCTION OF WARD ROAD AND A FIRE POND WITHIN 100' OF W-DISTRICT.
8.8000 SITE PLAN APPROVAL & DESIGN REVIEW
WAIVER OF REQUIREMENT FOR SITE PLAN REVIEW BY THE PLANNING BOARD FOR THE CONSTRUCTION OF MULTI-FAMILY STRUCTURES AND PARKING AREAS ASSOCIATED WITH MULTI-FAMILY STRUCTURES.
9.9001(2) BUILDING PERMITS
WAIVER OF REQUIREMENT THAT NO BUILDING PERMIT SHALL BE ISSUED BY THE INSPECTOR OF BUILDINGS WITHOUT THE WRITTEN APPROVAL OF A SITE PLAN BY THE PLANNING BOARD.

WAIVERS FROM TOWN OF BOXBOROUGH REGULATIONS FOR THE WETLAND BYLAW:
SECTION 2.5.3.1 PERFORMANCE STANDARDS
WAIVER OF PROHIBITION OF PARKING LOTS, PERMANENT STRUCTURES, AND SANITARY WASTE DISPOSAL SYSTEMS WITHIN ADJACENT LAND RESOURCE AREA, IN ORDER TO ALLOW THE PLACEMENT OF THE PROPOSED SANITARY WASTE DISPOSAL SYSTEM, PARKING LOT, ROAD AND OTHER PERMANENT STRUCTURES WITHIN THE ADJACENT LAND RESOURCE AREA IN ACCORDANCE WITH THE SITE PLAN APPROVED FOR THE PROJECT UNDER THIS COMPREHENSIVE PERMIT.

WAIVERS FROM BOXBOROUGH COMPREHENSIVE PERMIT RULES OF THE ZONING BOARD OF APPEALS:
SECTION 3.02(I) LIST OF REQUESTED EXCEPTIONS
WAIVER OF REQUIREMENT THAT APPLICANT PROVIDES A COMPLETE LIST OF ALL REQUESTED EXCEPTIONS AT THE TIME OF THE INITIAL FILING OF THE APPLICATION IN ORDER TO PERMIT THE LIST TO BE REVISED AS THE PROJECT EVOLVES THROUGH THE HEARING AND APPROVAL PROCESS.

COMMONWEALTH OF MASSACHUSETTS
TIMOTHY J. WILLIAMS
CIVIL
No.43119
REGISTERED PROFESSIONAL ENGINEER
7/8/15

PROFESSIONAL ENGINEER FOR
ALLEN & MAJOR ASSOCIATES, INC.

REV	DATE	DESCRIPTION
9.	07/08/2015	ISSUED FOR DEFINITIVE SITE PLAN
8.	06/12/2015	REVISED PER FIRE DEPARTMENT COMMENTS
7.	05/15/2015	ISSUED FOR PERMIT
6.	05/05/2015	ISSUED FOR DEP PERMIT APPROVAL
5.	05/04/2015	REVISED FOR PRICING
4.	03/26/2015	REVISED PER TOWN COMMENTS
3.	03/02/2015	ISSUED FOR MEPA
2.	02/27/2015	REVISED PER TOWN COMMENTS
1.	02/12/2015	ISSUED FOR ZONING BOARD OF APPEALS

APPLICANT:
JPI
3 WEST MAIN STREET, SUITE 203
IRVINGTON, NY 10533

PROJECT:
DEFINITIVE SITE PLAN SET
JEFFERSON AT BEAVER BROOK
BOXBOROUGH, MA

PROJECT NO.	2075-01	DATE:	02-11-2015
SCALE:	AS NOTED	DWG. NAME:	C2075-10
DESIGNED BY:	SJL	CHECKED BY:	CMQ

PREPARED BY:

ALLEN & MAJOR ASSOCIATES, INC.
civil & structural engineering ◆ land surveying
environmental consulting ◆ landscape architecture
www.allenmajor.com
100 COMMERCE WAY
P.O. BOX 2118
WOBURN MA 01888-0118
TEL: (781) 935-6889
FAX: (781) 935-2896
WOBURN, MA ◆ LAKEVILLE, MA ◆ MANCHESTER, NH

THIS DRAWING HAS BEEN PREPARED IN ELECTRONIC FORMAT. CLIENT/CLIENT'S REPRESENTATIVE OR CONSULTANT MAY BE PROVIDED COPIES OF DRAWINGS AND SPECIFICATIONS ON MAGNETIC MEDIA FOR HIS/HER INFORMATION AND USE FOR SPECIFIC APPLICATION TO THIS PROJECT. DUE TO THE POTENTIAL THAT THE MAGNETIC INFORMATION MAY BE MODIFIED UNINTENTIONALLY OR OTHERWISE, ALLEN & MAJOR ASSOCIATES, INC. MAY REMOVE ALL INDICATION OF THE DOCUMENT'S AUTHORSHIP ON THE MAGNETIC MEDIA. PRINTED REPRESENTATIONS OF THE DRAWINGS AND SPECIFICATIONS ISSUED SHALL BE THE ONLY RECORD COPIES OF ALLEN & MAJOR ASSOCIATES, INC.'S WORK PRODUCT.

DRAWING TITLE:	SHEET No.
PERMIT CONDITIONS	ABB-4

Copyright©2015 Allen & Major Associates, Inc.
All Rights Reserved

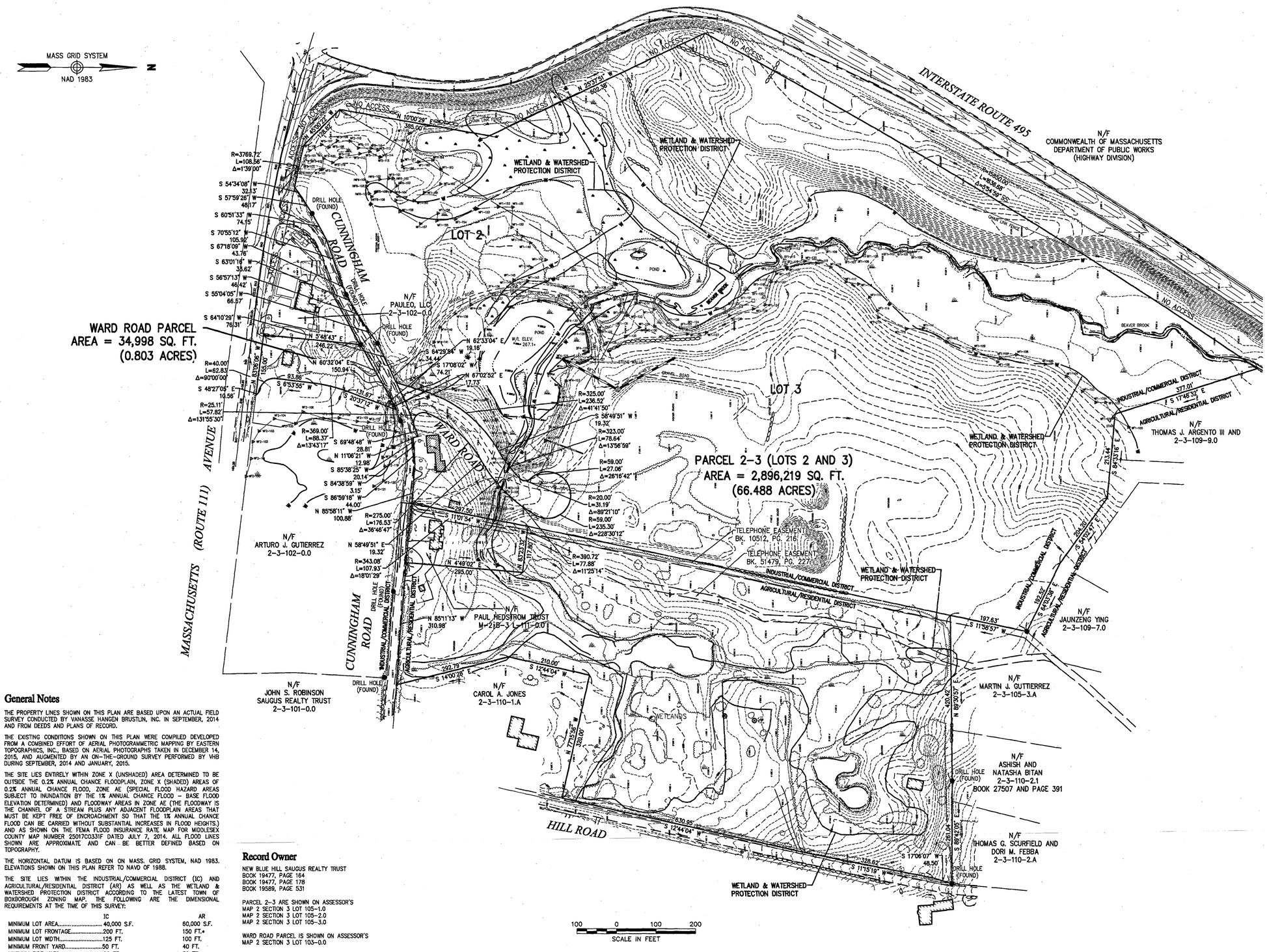

General Notes

1) THE PROPERTY LINES SHOWN ON THIS PLAN ARE BASED UPON AN ACTUAL FIELD SURVEY CONDUCTED BY VANASSE HANGEN BRUSTLIN, INC. IN SEPTEMBER, 2014 AND FROM DEEDS AND PLANS OF RECORD.

2) THE EXISTING CONDITIONS SHOWN ON THIS PLAN WERE COMPILED DEVELOPED FROM A COMBINED EFFORT OF AERIAL PHOTOGRAMMETRIC MAPPING BY EASTERN TOPOGRAPHICS, INC., BASED ON AERIAL PHOTOGRAPHS TAKEN IN DECEMBER 14, 2015, AND AUGMENTED BY AN ON-THE-GROUND SURVEY PERFORMED BY VHB DURING SEPTEMBER, 2014 AND JANUARY, 2015.

3) THE SITE LIES ENTIRELY WITHIN ZONE X (UNSHADED) AREA DETERMINED TO BE OUTSIDE THE 0.2% ANNUAL CHANCE FLOODPLAIN, ZONE X (SHADED) AREAS OF 0.2% ANNUAL CHANCE FLOOD, ZONE AE (SPECIAL FLOOD HAZARD AREAS SUBJECT TO INUNDATION BY THE 1% ANNUAL CHANCE FLOOD – BASE FLOOD ELEVATION DETERMINED) AND FLOODWAY AREAS IN ZONE AE (THE FLOODWAY IS THE CHANNEL OF A STREAM PLUS ANY ADJACENT FLOODPLAIN AREAS THAT MUST BE KEPT FREE OF ENCROACHMENT SO THAT THE 1% ANNUAL CHANCE FLOOD CAN BE CARRIED WITHOUT SUBSTANTIAL INCREASES IN FLOOD HEIGHTS.) AND AS SHOWN ON THE FEMA FLOOD INSURANCE RATE MAP FOR MIDDLESEX COUNTY MAP NUMBER 25017C0331F DATED JULY 7, 2014. ALL FLOOD LINES SHOWN ARE APPROXIMATE AND CAN BE BETTER DEFINED BASED ON TOPOGRAPHY.

4) THE HORIZONTAL DATUM IS BASED ON ON MASS. GRID SYSTEM, NAD 1983. ELEVATIONS SHOWN ON THIS PLAN REFER TO NAVD OF 1988.

5) THE SITE LIES WITHIN THE INDUSTRIAL/COMMERCIAL DISTRICT (IC) AND AGRICULTURAL/RESIDENTIAL DISTRICT (AR) AS WELL AS THE WETLAND & WATERSHED PROTECTION DISTRICT ACCORDING TO THE LATEST TOWN OF BOXBOROUGH ZONING MAP. THE FOLLOWING ARE THE DIMENSIONAL REQUIREMENTS AT THE TIME OF THIS SURVEY:

	IC	AR
MINIMUM LOT AREA	40,000 S.F.	60,000 S.F.
MINIMUM LOT FRONTAGE	200 FT.	150 FT.*
MINIMUM LOT WIDTH	125 FT.	100 FT.
MINIMUM FRONT YARD	50 FT.	40 FT.
MINIMUM SIDE YARD	50 FT.	30 FT.
MINIMUM REAR YARD	50 FT.	40 FT.
MAXIMUM BUILDING HEIGHT	45 FT./3 STORIES	45 FT./3 STORIES

*WHEN A LOT SHALL ABUT MORE THAN ONE STREET, THE LOT MUST HAVE A MINIMUM OF 150 FEET COMBINED, CONTINUOUS FRONTAGE ON ONE OR MORE STREETS AND SHALL NOT BE REQUIRED TO HAVE A MINIMUM FRONTAGE ON EACH OF THE STREETS.

Record Owner

NEW BLUE HILL SAUGUS REALTY TRUST
BOOK 19477, PAGE 164
BOOK 19477, PAGE 178
BOOK 19589, PAGE 531

PARCEL 2-3 ARE SHOWN ON ASSESSOR'S
MAP 2 SECTION 3 LOT 105-1.0
MAP 2 SECTION 3 LOT 105-2.0
MAP 2 SECTION 3 LOT 105-3.0

WARD ROAD PARCEL IS SHOWN ON ASSESSOR'S
MAP 2 SECTION 3 LOT 103-0.0

Parcel Decription

WARD ROAD, LOT 2 AND A PORTION OF LOT 3* SHOWN ON A PLAN ENTITLED "DEFINITIVE PLAN WARD ROAD IN BOXBOROUGH, MASSACHUSETTS (MIDDLESEX COUNTY)", BY BCS GROUP, INC., DATED APRIL 8, 2003, RECORDED WITH SAID DEEDS AS PLAN 1120 OF 2003.

*EXCLUDES PAUL HEDSTROM PARCEL, SHOWN ON PLAN.

Legend

- DRAIN MANHOLE
- CATCH BASIN
- SEWER MANHOLE
- ELECTRIC MANHOLE
- TELEPHONE MANHOLE
- MANHOLE
- HH HAND HOLE
- WATER GATE
- FIRE HYDRANT
- GAS GATE
- BOLLARD w/LIGHT
- STREET SIGN
- LIGHT POLE
- UTILITY POLE
- GUY POLE
- GUY WIRE
- MONITORING WELL
- FLOOD LIGHT
- WELL
- MARSH
- F.F.E.=45.27' FINISHED FLOOR ELEVATION
- CNO COULD NOT OPEN
- NPV NO PIPES VISIBLE
- DYL DOUBLE YELLOW LINE
- DWL DASHED WHITE LINE
- SYL SINGLE WHITE LINE
- EOP EDGE OF PAVEMENT
- CC CONCRETE CURB
- VGC VERTICAL GRANITE CURB
- SGC SLOPED GRANITE EDGE
- BB BITUMINOUS BERM
- BC BITUMINOUS CURB
- GUARD RAIL
- CHAIN LINK FENCE
- DRAINAGE LINE
- SEWER LINE
- GrW OVERHEAD WIRE
- E UNDERGROUND ELECTRIC
- T TELEPHONE LINE
- G GAS LINE
- W WATER LINE
- STONE WALL
- TREE LINE
- 100'BZ 100-FT BUFFER ZONE
- 100'RA 100-FT RIVER FRONT AREA
- 200'RA 200-FT RIVER FRONT AREA
- 275'-100' LIMIT MEAN ANNUAL HIGH WATER
- BB1-100 LIMIT OF BANK
- WFT-100 VEGETATED WETLAND BOUNDARY

No.	Revision	Date	Appvd.

Designed by | Drawn by | Checked by
CAD checked by | Approved by
Scale 1"=100' | Date February 4, 2015

Project Title
Jefferson at Beaver Brook
Cunningham Road
Boxborough, Massachusetts
Issued for

Drawing Title
Existing Conditions Plan of Land

Drawing Number
Sv-1

Sheet of
1 1

Project Number
05734.02

VHB
Vanasse Hangen Brustlin, Inc.
Transportation
Land Development
Environmental Services
101 Walnut Street, P.O. Box 9151
Watertown, Massachusetts 02471-9151
617 924 1770 • FAX 617 924 2286

\\MAWALD\jd\05734.02\cad\Archive\pr\05734.01-EXIST.dwg

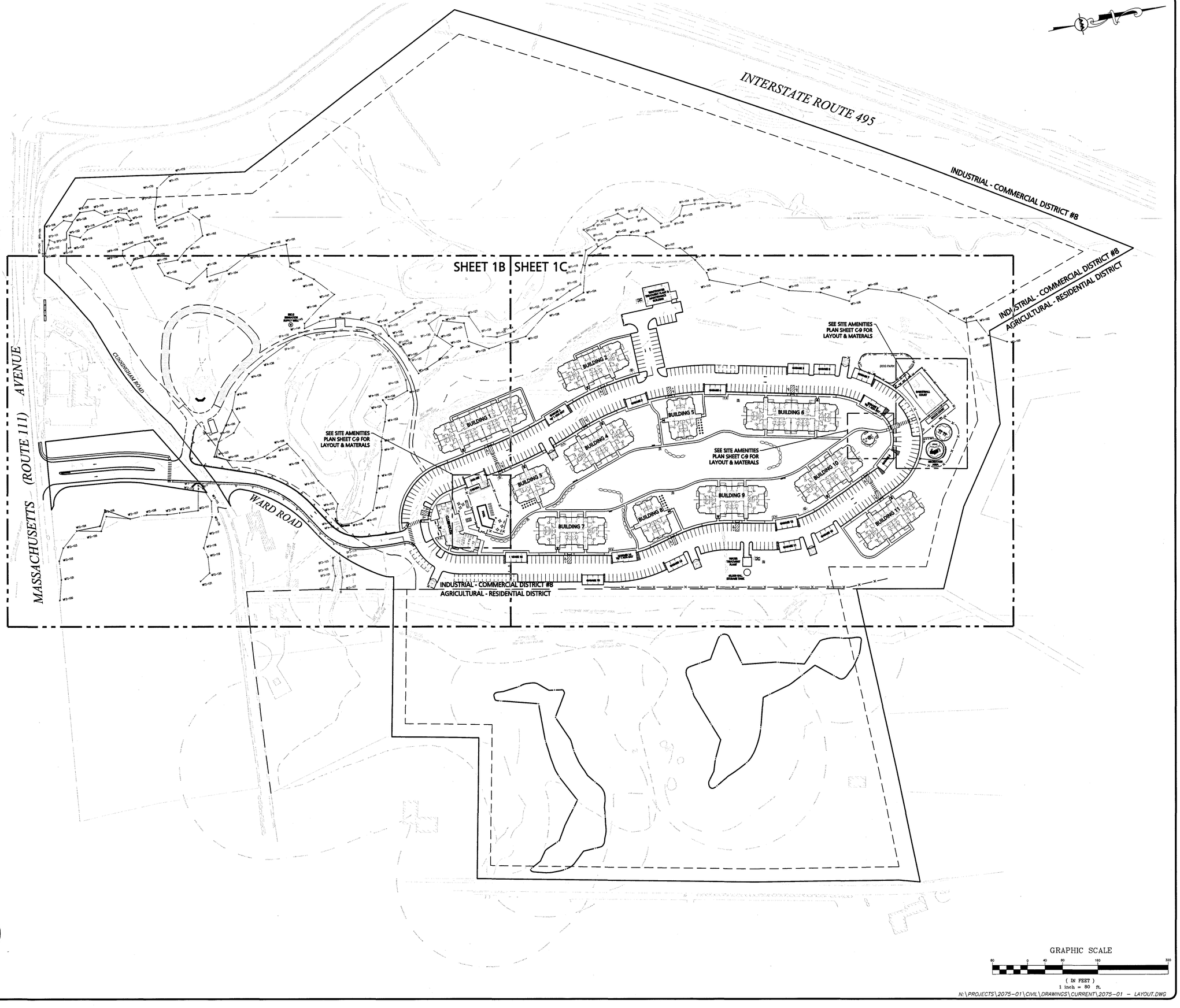

DIG SAFE

BEFORE YOU DIG
CALL 811 OR
1-888-DIG-SAFE
1-888-344-7233

GRAPHIC SCALE

80 0 40 80 160 320

(IN FEET)
1 inch = 80 ft.

N:\PROJECTS\2075-01\CIVIL\DRAWINGS\CURRENT\2075-01 - LAYOUT.DWG

JPI

WAIVERS OF TOWN OF BOXBOROUGH ZONING BYLAWS:

4.4003(1) USE REGULATION SCHEDULE
WAIVER TO PERMIT SINGLE-FAMILY AND MULTI-FAMILY ATTACHED RESIDENTIAL USES NOT OTHERWISE PERMITTED IN THE INDUSTRIAL COMMERCIAL DISTRICT (I.E. THE PROPOSED TWO (2) SINGLE FAMILY DWELLINGS AND THE PROPOSED 244 APARTMENT UNITS IN ELEVEN (11) MULTI-FAMILY BUILDINGS, FOR A TOTAL OF 246 UNITS)

4.4033 USE REGULATION SCHEDULE
WAIVER TO PERMIT A USE WHICH IS NOT OTHERWISE ACCESSORY TO INDUSTRIAL-COMMERCIAL USES, I.E., A CLUBHOUSE/RENTAL OFFICE.

5.5002 DIMENSIONAL SCHEDULE
WAIVER OF REQUIREMENT FOR A MAXIMUM FLOOR AREA RATIO OF 0.10.

6.6004 SURFACE, CIRCULATION, AND LANDSCAPING REQUIREMENTS
WAIVER OF REQUIREMENT THAT AUTOMOBILE PARKING SPACES SHALL NOT BE LESS THAN 10 FEET BY 20 FEET, IN ORDER TO ALLOW PARKING SPACE OF 9 FEET BY 18 FEET.

6.6103 MULTIPLE BUILDINGS ON ONE LOT
WAIVER OF REQUIREMENT THAT WHERE MORE THAN ONE BUILDING IS PROPOSED TO BE BUILT UPON A LOT, THE PLAN SHALL BE REVIEWED BY THE PLANNING BOARD REGARDING ADEQUACY OF ACCESS TO BUILDINGS, IN ORDER TO SUBSTITUTE THE PERMISSION FROM THE ZONING BOARD OF APPEALS GRANTED UNDER THIS COMPREHENSIVE PERMIT.

6.6105 PRIVATE/COMMON DRIVEWAYS IN THE BUSINESS, BUSSINESS 1, OFFICE PARK, TOWN CENTER, AND INDUSTRIAL-COMMERCIAL DISTRICTS
WAIVER OF THE REQUIREMENT THAT PRIVATE/COMMON DRIVEWAYS ARE ALLOWED IN THE IC DISTRICT ONLY BY SPECIAL PERMIT OF THE PLANNING BOARD, IN ORDER TO SUBSTITUTE THE PERMISSION FROM THE ZONING BOARD OF APPEALS UNDER THIS COMPREHENSIVE PERMIT.

7.7004(G) SPECIAL REGULATIONS AQUIFER PROTECTION DISTRICT
WAIVER OF REQUIREMENT THAT THERE BE NO DISPOSAL OF SANITARY WASTE TO A SUBSURFACE DISPOSAL SYSTEM IN QUANTITIES EXCEEDING 440 GALLONS PER DAY PER ACRE OF AQUIFER PROTECTION DISTRICT CONTAINED WITHIN THE LOT, IN ORDER TO ALLOW QUANTITIES OF UP TO 750 GALLONS PER DAY PER ACRE OF THE SITE IN THE AQUIFER PROTECTION DISTRICT IN THE EVENT RESERVE LEACHING FIELDS ARE USED.

7.7007(1) DESIGN REQUIREMENTS
WAIVER OF REQUIREMENT THAT WHERE A PORTION OF THE SITE IS LOCATED OUTSIDE OF THE AQUIFER PROTECTION DISTRICT, POTENTIAL POLLUTION SOURCES, SUCH AS ON SITE DISPOSAL SYSTEMS, SHOULD BE LOCATED OUTSIDE THE DISTRICT BOUNDARIES, IN ORDER TO ALLOW RESERVE LEACHING FIELD TO BE LOCATED WITHIN THE AQUIFER PROTECTION DISTRICT.

7.7104(D) AND (H) W-DISTRICT USE REGULATIONS
WAIVER OF REQUIREMENTS FOR SPECIAL PERMIT FOR USE IN THE W-DISTRICT, IN ORDER TO SUBSTITUTE APPROVAL UNDER THIS COMPREHENSIVE PERMIT.

7.7106 SUBMITTALS
WAIVER OF REQUIREMENTS FOR SPECIAL PERMIT APPLICATIONS TO BE PREPARED AND SUBMITTED TO THE BOARD OF APPEALS, IN ORDER TO PERMIT ONE COMPREHENSIVE SUBMISSION TO THE BOARD TO BE ACTED ON UNDER G.L. C. 40B, §21.

7.7109 PROCEDURES
WAIVER OF REQUIREMENT FOR SPECIAL PERMIT APPLICATIONS TO BE PREPARED AND SUBMITTED TO THE BOARD OF APPEALS IN ORDER TO PERMIT A SINGLE COMPREHENSIVE PERMIT SUBMISSION TO THE BOARD TO BE ACTED UPON UNDER G.L. C.40B, §21.

7.7200 LANDS BORDERING THE W-DISTRICT
WAIVER OF REQUIREMENT FOR SPECIAL PERMIT TO PLACE STRUCTURES WITHIN ONE HUNDRED (100') FEET OF THE W-DISTRICT, IN ORDER TO PERMIT CONSTRUCTION OF WARD ROAD AND A FIRE POND WITHIN 100' OF W-DISTRICT.

8.8000 SITE PLAN APPROVAL & DESIGN REVIEW
WAIVER OF REQUIREMENT FOR SITE PLAN REVIEW BY THE PLANNING BOARD FOR THE CONSTRUCTION OF MULTI-FAMILY STRUCTURES AND PARKING AREAS ASSOCIATED WITH MULTI-FAMILY STRUCTURES.

9.9001(2) BUILDING PERMITS
WAIVER OF REQUIREMENT THAT NO BUILDING PERMIT SHALL BE ISSUED BY THE INSPECTOR OF BUILDINGS WITHOUT THE WRITTEN APPROVAL OF A SITE PLAN BY THE PLANNING BOARD.

WAIVERS FROM TOWN OF BOXBOROUGH REGULATIONS FOR THE WETLAND BYLAW:

SECTION 2.5.3.1 PERFORMANCE STANDARDS
WAIVER OF PROHIBITION OF PARKING LOTS, PERMANENT STRUCTURES, AND SANITARY WASTE DISPOSAL SYSTEMS WITHIN ADJACENT LAND RESOURCE AREA, IN ORDER TO ALLOW THE PLACEMENT OF THE PROPOSED SANITARY WASTE DISPOSAL SYSTEM, PARKING LOT, ROAD AND OTHER PERMANENT STRUCTURES WITHIN THE LAND RESOURCE AREA, AS SHOWN AND DESCRIBED WITHIN THE SITE PLAN APPROVED FOR THE PROJECT UNDER THIS COMPREHENSIVE PERMIT.

WAIVERS FROM BOXBOROUGH COMPREHENSIVE PERMIT RULES OF THE BOXBOROUGH ZBA BOARD OF APPEALS:

SECTION 3.02(1) LIST OF REQUESTED EXCEPTIONS
WAIVER OF REQUIREMENT THAT APPLICANT PROVIDES A COMPLETE LIST OF ALL REQUESTED EXCEPTIONS AT THE TIME OF THE INITIAL FILING OF THE APPLICATION IN ORDER TO PERMIT THE LIST TO BE REVISED AS THE PROJECT EVOLVES THROUGH THE HEARING AND APPROVAL PROCESS.

COMMONWEALTH OF MASSACHUSETTS
TIMOTHY J. WILLIAMS
CIVIL
No. 43119
REGISTERED PROFESSIONAL ENGINEER
7/9/15

PROFESSIONAL ENGINEER FOR
ALLEN & MAJOR ASSOCIATES, INC.

REV	DATE	DESCRIPTION
9.	07/08/2015	ISSUED FOR DEFINITIVE SITE PLAN
8.	06/12/2015	REVISED PER FIRE DEPARTMENT COMMENTS
7.	05/15/2015	ISSUED FOR PERMIT
6.	05/05/2015	ISSUED FOR DEP PERMIT APPROVAL
5.	05/04/2015	REVISED FOR PRICING
4.	03/26/2015	REVISED PER TOWN COMMENTS
3.	03/02/2015	ISSUED FOR MEPA
2.	02/27/2015	REVISED PER TOWN COMMENTS
1.	02/12/2015	ISSUED FOR ZONING BOARD OF APPEALS

APPLICANT:

JPI
3 WEST MAIN STREET, SUITE 203
IRVINGTON, NY 10533

PROJECT:

DEFINITIVE SITE PLAN SET
JEFFERSON AT BEAVER BROOK
BOXBOROUGH, MA

PROJECT NO.	2075-01	DATE:	02-11-2015
SCALE:	1"=80'	DWG. NAME:	C2075-10
DESIGNED BY:	SJL	CHECKED BY:	CMQ

PREPARED BY:

ALLEN & MAJOR ASSOCIATES, INC.
civil & structural engineering ◆ land surveying
environmental consulting◆ landscape architecture
www.allenmajor.com
100 COMMERCE WAY
P.O. BOX 2118
WOBURN MA 01888-0118
TEL: (781) 935-6889
FAX: (781) 935-2896
WOBURN, MA ◆ LAKEVILLE, MA ◆ MANCHESTER, NH

THIS DRAWING HAS BEEN PREPARED IN ELECTRONIC FORMAT. CLIENT/CLIENT'S REPRESENTATIVE OR CONSULTANT MAY BE PROVIDED COPIES OF DRAWINGS AND SPECIFICATIONS ON MAGNETIC MEDIA FOR HIS/HER INFORMATION AND USE FOR SPECIFIC APPLICATION TO THIS PROJECT. DUE TO THE POTENTIAL THAT THE MAGNETIC INFORMATION MAY BE MODIFIED UNINTENTIONALLY OR OTHERWISE, ALLEN & MAJOR ASSOCIATES, INC. MAY REMOVE ALL INDICATION OF THE DOCUMENT'S AUTHORSHIP ON THE MAGNETIC MEDIA. PRINTED REPRESENTATIONS OF THE DRAWINGS AND SPECIFICATIONS ISSUED SHALL BE THE ONLY RECORD COPIES OF ALLEN & MAJOR ASSOCIATES, INC.'S WORK PRODUCT.

DRAWING TITLE:

LAYOUT & MATERIALS PLAN

SHEET No.

C-1A

Copyright©2015 Allen & Major Associates, Inc.
All Rights Reserved

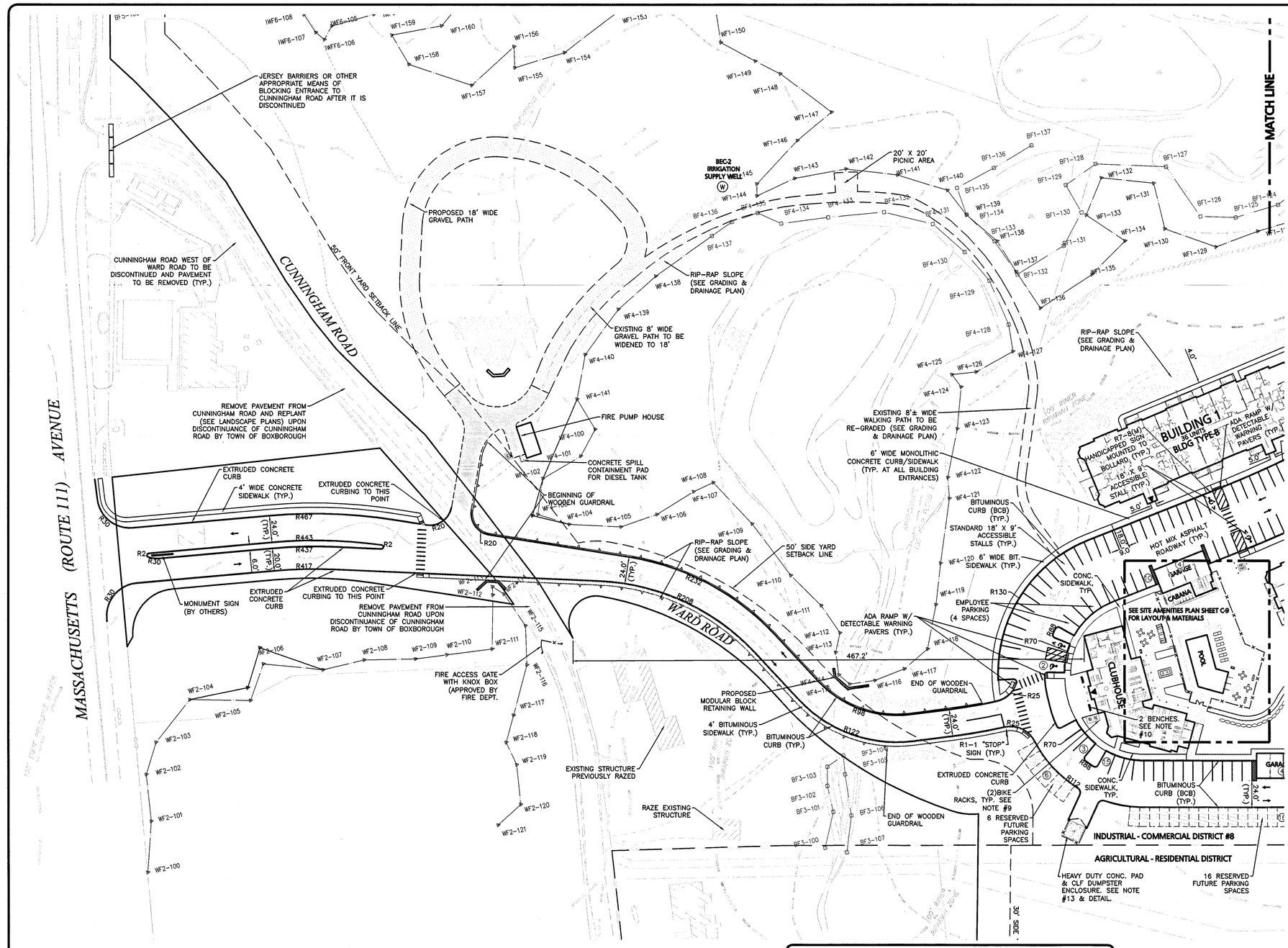

LEGEND:

- PROP. PROPERTY LINE
- SIGN
- BOLLARD
- BUILDING
- BUILDING ARCHITECTURE
- BUILDING INTERIOR WALLS
- MAIN BUILDING ENTRANCE
- CURB
- RETAINING WALL
- PARKING STRIPING
- FUTURE PARKING SPACES
- ROADWAY STRIPING
- TRAFFIC ARROWS
- HEAVY DUTY CONCRETE
- CONCRETE SIDEWALK
- BITUMINOUS SIDEWALK
- ADA ACCESSIBLE RAMP
- ADA DET. WARNING SURFACE
- GRAVEL PATH
- JERSEY BARRIERS
- SETBACK LINE
- PARKING COUNT (16)
- FENCING, SEE PLAN FOR TYPE.
- TRANSFORMER

NOTES:

1. THE LOCATIONS OF EXISTING UNDERGROUND UTILITIES ARE SHOWN IN AN APPROXIMATE WAY ONLY AND HAVE NOT BEEN INDEPENDENTLY VERIFIED BY THE OWNER OR IT'S REPRESENTATIVE. THE CONTRACTOR SHALL DETERMINE THE EXACT LOCATION OF ALL EXISTING UTILITIES BEFORE COMMENCING WORK, AND AGREES TO BE FULLY RESPONSIBLE FOR ANY AND ALL DAMAGES WHICH MIGHT BE OCCASIONED BY THE CONTRACTOR'S FAILURE TO EXACTLY LOCATE AND PRESERVE ANY AND ALL UNDERGROUND UTILITIES.
2. THE INFORMATION SHOWN ON THIS PLAN IS THE SOLE PROPERTY OF ALLEN & MAJOR ASSOCIATES, INC. IT'S INTENDED USE IS TO PROVIDE INFORMATION. ANY ALTERATION, MISUSE, OR RECALCULATION OF INFORMATION OR DATA WITHOUT THE EXPRESSED, WRITTEN CONSENT OF ALLEN & MAJOR ASSOCIATES, INC. IS STRICTLY PROHIBITED.
3. THE CONTRACTOR SHALL CONTACT "DIGSAFE" AND THE TOWN OF BOXBOROUGH DEPARTMENT OF PUBLIC WORKS AT LEAST 72 HOURS PRIOR TO ANY EXCAVATION WORK TO REQUEST THE LOCATION OF THE EXISTING UTILITIES.

   DIGSAFE:
   1-800-344-7233
   BOXBOROUGH DEPT. OF PUBLIC WORKS: 1-978-264-1790
4. SEE THE ABBREVIATIONS AND NOTES PLAN AND DETAILS FOR FURTHER INFORMATION.
5. ALL CURBING RADII SHALL BE 3' UNLESS OTHERWISE NOTED.

ADDITIONAL NOTES:

1. THE EXISTING CONDITIONS AND PROPERTY LINES SHOWN ARE BASED ON A PLAN ENTITLED "ALTA/ACSM LAND TITLE SURVEY," DATED SEPTEMBER 25, 2014 COMPRISED FROM AN ACTUAL FIELD SURVEY BY VANASSEE HANGEN BRUSTLIN, INC. IN SEPTEMBER 2014.

   DATUM: TEMPORARY BENCHMARK AT UTILITY POLE #6 ON CUNNINGHAM ROAD AT WARD ROAD, ELEVATION = 281.85
2. WARD ROAD IS AN APPROVED SUBDIVISION ROADWAY THAT IS PARTIALLY CONSTRUCTED. THE INTENT OF THIS PROJECT IS TO IMPROVE THE WARD ROAD DRAINAGE SYSTEM AS SHOWN HEREIN. REFER TO DEFINITIVE SUBDIVISION PLANS BY ANDERSON-NICHOLS, DATED JUNE 15, 1989, FOR THE ORIGINAL DESIGN LAYOUT AND LIGHTING INFORMATION.
3. THE PROPOSED ROUTE 111 IMPROVEMENTS ARE SHOWN HEREIN FOR REFERENCES PURPOSES ONLY. THE DESIGN AND CONSTRUCTION OF ROUTE 111 IMPROVEMENTS ARE UNDER A SEPARATE CONTRACT.
4. THE PROPOSED WATER AND WASTEWATER TREATMENT PLANTS FOR JEFFERSON AT BEAVER BROOK ARE DESIGNED UNDER A SEPARATE CONTRACT. THESE FACILITIES ARE SHOWN HEREIN FOR REFERENCE PURPOSES ONLY.
5. AREAS OUTSIDE THE LIMITS OF PROPOSED WORK DISTURBED BY THE CONTRACTOR'S OPERATIONS SHALL BE RESTORED BY THE CONTRACTOR TO THEIR ORIGINAL CONDITION AT THE CONTRACTOR'S EXPENSE, TO THE SATISFACTION OF THE OWNER OR ENGINEER. ALL AREAS DISTURBED DURING CONSTRUCTION NOT COVERED WITH BUILDINGS, STRUCTURES, OR PAVEMENTS SHALL RECEIVE SIX INCHES OF LOAM AND SEED, UNLESS DIRECTED OTHERWISE BY THE ENGINEER OR OWNER.
6. CONTRACTOR SHALL INSTALL ALL EROSION CONTROL MEASURES PRIOR TO EARTHWORK OPERATION AND MAINTAIN ALL EROSION CONTROL MEASURES AND SEEDED EMBANKMENTS DURING CONSTRUCTION. EROSION CONTROL SHALL BE REMOVED ONLY UPON THE ESTABLISHMENT OF ALL LANDSCAPED AREAS AND WHEN AUTHORIZED BY THE CONSERVATION COMMISSION.
7. CONTRACTOR SHALL BE SOLELY RESPONSIBLE FOR SITE SECURITY AND JOB SAFETY. ALL CONSTRUCTION ACTIVITY SHALL BE IN ACCORDANCE WITH OSHA REGULATIONS AND STATE AND LOCAL REQUIREMENTS.
8. CONTRACTOR TO COORD. WITH OWNER ON SCOPE OF WORK FOR VISTA PRUNING OF EXISTING TREES ON APPLICANTS PROPERTY FOR VIEW OF HORSE FARM. VISTA PRUNING SCOPE TO ONLY INCLUDE TRIMMING OF SOME TREE LIMBS AND REMOVAL OF SOME LIMITED SMALL BRUSH, NO TREE REMOVAL.
9. BIKE RACKS TO BE FROM LANDSCAPE FORMS; 1-800-430-6209 MODEL FLO BIKE RACK 28" X 26" X 32" POWERCOATED AND SURFACE MOUNTED TO 12' X 6.5' BIT. CONC. PAD (EXCEPT RECREATION AREA RACK MOUNTED TO BIT. CONC.). SURFACE MOUNT PER MANUFACTURERS RECOMMENDATIONS. POWERCOAT COLOR SELECTED BY OWNER. PROVIDE SHOP DRAWINGS FOR APPROVAL PRIOR TO ORDERING.
10. BENCHES TO BE FROM LANDSCAPE FORMS; MODEL: VILLAGE GREEN BENCH WITH END ARMS. 25" X 32" X 70". POWERCOAT COLOR SELECTED BY OWNER. BENCHES TO BE PERMEANENT SURFACE MOUNTED TO CONCRETE WITH APPROPRIATE HARDWARE PER MANUFACTURERS RECOMMENDATIONS. PROVIDE SHOP DRAWINGS FOR APPROVAL PRIOR TO ORDERING.
11. TRASH AND RECYCLING BINS TO BE FROM LANDSCAPE FORMS "SORT" 3 BIN TRASH AND RECYCLING SYSTEM. INSTALL PER MANUFACTURERS RECOMMENDATIONS. COLOR & FINISH CHOSEN BY OWNER. PROVIDE SHOP DRAWING TO A&M FOR APPROVAL PRIOR TO ORDERING.
12. CONTRACTOR TO CAREFULLY SALVAGE EXISTING FIELDSTONE RETAINING WALL MATERIAL IN AREAS WHICH WILL BE DISTURBED BY THE PROPOSED PROJECT. NOT ALL AREAS OF EXISTING FIELDSTONE WALLS ONSITE HAVE BEEN SHOWN ON THE EXISTING CONDITIONS SURVEY. CONTRACTOR TO DETERMINE AMOUNT OF EXISTING FIELDSTONE WALLS TO SALVAGE IN ORDER TO HAVE ENOUGH MATERIAL ONSITE FOR THE PROPOSED FIELDSTONE WALLS. SALVAGED STONES TO BE SAVED IN AN ONSITE LOCATION WHICH WILL NOT BE DISTURBED BY THE PROPOSED CONSTRUCTION ACTIVITIES. SEE LANDSCAPE PLAN FOR PROPOSED LOCATION AND LENGTH OF FIELDSTONE WALLS.
13. AT DUMPSTER ENCLOSURE AREAS INSTALL PVC PRIVACY SLATS ON CLF. COORD. WITH OWNER FOR FINAL FENCE HT. FINAL FENCE HT. BASED ON OWNER SELECTED DUMPSTER HEIGHT. FENCE TO BE AT LEAST 12" ABOVE DUMPSTER HEIGHT. FOR PRICING PURPOSES ONLY ASSUME 9' HT. FENCING.

GRAPHIC SCALE
40 0 20 40 80 160
(IN FEET)
1 inch = 40 ft.

N:\PROJECTS\2075-01\CIVIL\DRAWINGS\CURRENT\2075-01 - LAYOUT.DWG

DIMENSIONAL REQUIREMENTS: INDUSTRIAL - COMMERCIAL (IC) DISTRICT

ITEM	REQUIRED/ALLOWED	EXISTING	PROPOSED
LOT AREA (MIN.)	80,000 S.F. 1.84 ACRES	2,834,533 S.F. 65.07± ACRES	2,834,533 S.F. 65.07± ACRES
UPLAND LOT AREA (MIN.)	20%	74.5%	74.5%
LOT FRONTAGE (MIN.)	200'	679.9'	679.9'
LOT WIDTH (MIN.)	125'	>125'	>125'
FRONT YARD BUILDING SETBACK	50' (MIN.)	N/A	467.2'
SIDE YARD BUILDING SETBACK	50' (MIN.)	N/A	88.5'
REAR YARD BUILDING SETBACK	50' (MIN.)	N/A	83.6'
LOT COVERAGE (MAX.)	30%	N/A	12.8%
BUILDING STORIES (MAX.)	3 STORIES	N/A	3 STORIES
BUILDING HEIGHT (MAX.)	45'	N/A	35'
FLOOR AREA RATIO	0.10	N/A	0.11

* MULTI-FAMILY DWELLINGS SHALL BE ALLOWED IN THE INDUSTRIAL-COMMERCIAL DISTRICT THROUGH A COMPREHENSIVE PERMIT

DIG SAFE
BEFORE YOU DIG CALL 811 OR 1-888-DIG-SAFE 1-888-344-7233

OFF-STREET PARKING SUMMARY

USE: RESIDENTIAL USES, INCLUDING SINGLE FAMILY, TWO FAMILY, AND MULTI-FAMILY

1.85 SPACES PER UNIT

PARKING SUMMARY:

MULTI-FAMILY 244 UNITS x 1.85 SPACES/UNIT =451 SPACES
TOTAL OFF-STREET PARKING REQUIREMENT =451 SPACES

ADA REQUIRED: THERE ARE BETWEEN 401-500 PARKING SPACES, REQUIRING 9 TOTAL PARKING STALLS TO BE ACCESSIBLE.

ADA PROVIDED: 18 TOTAL ACCESSIBLE PARKING, WITH 12 BEING VAN ACCESSIBLE & 3 LOCATED IN PARKING GARAGES.

**37 LAND BANKED RESERVED FUTURE PARKING STALLS

UNCOVERED PARKING		GARAGE PARKING		TOTAL PROVIDED	TOTAL REQUIRED	**TOTAL FUTURE BUILD-OUT
STANDARD (9' x 18')	ACCESSIBLE (9'x18')	STANDARD (9' x 18')	ACCESSIBLE (9'x18')			
372	15	61	3	451	451	488

WETLAND RESOURCE SUMMARY

ITEM	PROPOSED
LOT AREA	2,834,533± S.F.
IMPACTED LOT AREA	836,681± S.F.
TOTAL PARCEL BVW AREA	719,330± S.F
PERMANENT BVW DISTURBANCE	628± S.F. (NOTE 1)
PROPOSED BVW REPLICATION AREA	628± S.F. (NOTE 2)
TOTAL WETLAND REPLICATION RATIO	1 : 1
TOTAL PARCEL 100' BVW BUFFER	864,447± S.F.
DISTURBANCE WITHIN 100-FOOT BVW BUFFER	126,020± S.F.
TOTAL PARCEL 200' RIVERFRONT AREA	1,306,545± S.F.
RIVERFRONT AREA DISTURBANCE	130,598± S.F.
RIVERFRONT AREA DISTURBANCE/TOTAL RIVERFRONT AREA	9.9%

NOTES:
1. PERMANENT BVW DISTURBANCE DOES NOT INCLUDE 129 S.F. TEMPORARY BVW DISTURBANCE.
2. SEE LANDSCAPE PLAN FOR WETLAND DISTURBANCE AND REPLICATION AREAS.

WAIVERS OF TOWN OF BOXBOROUGH ZONING BYLAWS:
4.4003(1) USE REGULATION SCHEDULE
WAIVER TO PERMIT SINGLE-FAMILY AND MULTI-FAMILY ATTACHED RESIDENTIAL USES NOT OTHERWISE PERMITTED IN THE INDUSTRIAL COMMERCIAL DISTRICT (I.E., THE PROPOSED TWO (2) SINGLE FAMILY DWELLINGS AND THE PROPOSED 244 APARTMENT UNITS IN ELEVEN (11) MULTI-FAMILY BUILDINGS, FOR A TOTAL OF 246 UNITS)
4.4033 USE REGULATION SCHEDULE
WAIVER TO PERMIT A USE WHICH IS NOT OTHERWISE ACCESSORY TO INDUSTRIAL-COMMERCIAL USES, I.E., A CLUBHOUSE/RENTAL OFFICE.
5.5002 DIMENSIONAL SCHEDULE
WAIVER OF REQUIREMENT FOR A MAXIMUM FLOOR AREA RATIO OF 0.10.
6.8004 SURFACE, CIRCULATION, AND LANDSCAPING REQUIREMENTS
WAIVER OF REQUIREMENT THAT AUTOMOBILE PARKING SPACES SHALL NOT BE LESS THAN 10 FEET BY 20 FEET, IN ORDER TO ALLOW PARKING SPACE OF 9 FEET BY 18 FEET.
6.8103 MULTIPLE BUILDINGS ON ONE LOT
WAIVER OF REQUIREMENT THAT WHERE MORE THAN ONE BUILDING IS PROPOSED TO BE BUILT UPON A LOT, THE PLAN SHALL BE REVIEWED BY THE PLANNING BOARD REGARDING ADEQUACY OF ACCESS TO BUILDINGS, IN ORDER TO SUBSTITUTE THE PERMISSION FROM THE ZONING BOARD OF APPEALS GRANTED UNDER THIS COMPREHENSIVE PERMIT.
6.8105 PRIVATE/COMMON DRIVEWAYS IN THE, BUSINESS, BUSINESS 1, OFFICE PARK, TOWN CENTER, AND INDUSTRIAL-COMMERCIAL DISTRICTS
WAIVER OF THE REQUIREMENT THAT PRIVATE/COMMON DRIVEWAYS ARE ALLOWED IN THE IC DISTRICT ONLY BY SPECIAL PERMIT OF THE PLANNING BOARD, IN ORDER TO SUBSTITUTE THE PERMISSION FROM THE ZONING BOARD OF APPEALS UNDER THIS COMPREHENSIVE PERMIT.
7.7004(G) SPECIAL REGULATIONS AQUIFER PROTECTION DISTRICT
WAIVER OF REQUIREMENT THAT THERE BE NO DISPOSAL OF SANITARY WASTE TO A SUBSURFACE DISPOSAL SYSTEM IN QUANTITIES EXCEEDING 440 GALLONS PER DAY PER ACRE OF AQUIFER PROTECTION DISTRICT CONTAINED WITHIN THE LOT, IN ORDER TO ALLOW QUANTITIES OF UP TO 750 GALLONS PER DAY PER ACRE OF THE SITE IN THE AQUIFER PROTECTION DISTRICT IN THE EVENT RESERVE LEACHING FIELDS ARE USED.
7.7007(1) DESIGN REQUIREMENTS
WAIVER OF REQUIREMENT THAT WHERE A PORTION OF THE SITE IS LOCATED OUTSIDE OF THE AQUIFER PROTECTION DISTRICT, POTENTIAL POLLUTION SOURCES, SUCH AS ON SITE DISPOSAL SYSTEMS, SHOULD BE LOCATED OUTSIDE THE DISTRICT BOUNDARIES, IN ORDER TO ALLOW RESERVE LEACHING FIELD TO BE LOCATED WITHIN THE AQUIFER PROTECTION DISTRICT.
7.7104(G) AND (H) W-DISTRICT USE REGULATIONS
WAIVER OF REQUIREMENTS FOR SPECIAL PERMIT FOR USE IN THE W-DISTRICT, IN ORDER TO SUBSTITUTE APPROVAL UNDER THIS COMPREHENSIVE PERMIT.
7.7108 SUBMITTALS
WAIVER OF REQUIREMENTS FOR SPECIAL PERMIT APPLICATIONS TO BE PREPARED AND SUBMITTED TO THE BOARD OF APPEALS, IN ORDER TO PERMIT ONE COMPREHENSIVE SUBMISSION TO THE BOARD TO BE ACTED ON UNDER G.L. C. 40B, §21.
7.7109 PROCEDURES
WAIVER OF REQUIREMENT FOR SPECIAL PERMIT APPLICATIONS TO BE PREPARED AND SUBMITTED TO THE BOARD OF APPEALS IN ORDER TO PERMIT A SINGLE COMPREHENSIVE PERMIT SUBMISSION TO THE BOARD TO BE ACTED UPON UNDER G.L. C.40B, §21.
7.7200 LANDS BORDERING THE W-DISTRICT
WAIVER OF REQUIREMENT FOR SPECIAL PERMIT TO PLACE STRUCTURES WITHIN ONE HUNDRED (100') FEET OF THE W-DISTRICT, IN ORDER TO PERMIT CONSTRUCTION OF WARD ROAD AND A FIRE POND WITHIN 100' OF W-DISTRICT.
8.8000 SITE PLAN APPROVAL & DESIGN REVIEW
WAIVER OF REQUIREMENT FOR SITE PLAN REVIEW BY THE PLANNING BOARD FOR THE CONSTRUCTION OF MULTI-FAMILY STRUCTURES AND PARKING AREAS ASSOCIATED WITH MULTI-FAMILY STRUCTURES.
9.9001(2) BUILDING PERMITS
WAIVER OF REQUIREMENT THAT NO BUILDING PERMIT SHALL BE ISSUED BY THE INSPECTOR OF BUILDINGS WITHOUT THE WRITTEN APPROVAL OF A SITE PLAN BY THE PLANNING BOARD.

WAIVERS FROM TOWN OF BOXBOROUGH REGULATIONS FOR THE WETLAND BYLAW:
SECTION 2.5.3.1 PERFORMANCE STANDARDS
WAIVER OF PROHIBITION OF PARKING LOTS, PERMANENT STRUCTURES, AND SANITARY SEWAGE DISPOSAL SYSTEMS WITHIN ADJACENT LAND RESOURCE AREA, IN ORDER TO ALLOW THE PLACEMENT OF THE PROPOSED SANITARY WASTE DISPOSAL SYSTEM, PARKING LOT, ROAD AND OTHER PERMANENT STRUCTURES WITHIN THE ADJACENT LAND RESOURCE AREA IN ACCORDANCE WITH THE SITE PLAN APPROVED FOR THE PROJECT UNDER THIS COMPREHENSIVE PERMIT.

WAIVERS FROM BOXBOROUGH COMPREHENSIVE PERMIT RULES OF THE ZONING BOARD OF APPEALS:
SECTION 3.02(I) LIST OF REQUESTED EXCEPTIONS
WAIVER TO ALLOW APPLICANT TO PROVIDE A COMPLETE LIST OF ALL WAIVERS REQUESTED OR DEEMED AT THE TIME OF THE INITIAL FILING OF THE APPLICATION, RATHER THAN AT THE TIME THE LIST TO BE REVISED AS THE PROJECT EVOLVES THROUGH THE HEARING AND APPROVAL PROCESS.

TIMOTHY J. WILLIAMS CIVIL No.43119 REGISTERED PROFESSIONAL ENGINEER
7/9/15
PROFESSIONAL ENGINEER FOR ALLEN & MAJOR ASSOCIATES, INC.

REV	DATE	DESCRIPTION
9.	07/08/2015	ISSUED FOR DEFINITIVE SITE PLAN
8.	06/12/2015	REVISED PER FIRE DEPARTMENT COMMENTS
7.	05/15/2015	ISSUED FOR PERMIT
6.	05/05/2015	ISSUED FOR DEP PERMIT APPROVAL
5.	05/04/2015	REVISED FOR PRICING
4.	03/26/2015	REVISED PER TOWN COMMENTS
3.	03/02/2015	ISSUED FOR MEPA
2.	02/27/2015	REVISED PER TOWN COMMENTS
1.	02/12/2015	ISSUED FOR ZONING BOARD OF APPEALS

APPLICANT:
JPI
3 WEST MAIN STREET, SUITE 203
IRVINGTON, NY 10533

PROJECT:
DEFINITIVE SITE PLAN SET
JEFFERSON AT BEAVER BROOK
BOXBOROUGH, MA

PROJECT NO.	2075-01	DATE:	02-11-2015
SCALE:	1"=40'	DWG. NAME:	C2075-10
DESIGNED BY:	SJL	CHECKED BY:	CMQ

PREPARED BY:
ALLEN & MAJOR ASSOCIATES, INC.
civil & structural engineering • land surveying
environmental consulting • landscape architecture
www.allenmajor.com
100 COMMERCE WAY
P.O. BOX 2118
WOBURN MA 01888-0118
TEL: (781) 935-6889
FAX: (781) 935-2896
WOBURN, MA • LAKEVILLE, MA • MANCHESTER, NH

THIS DRAWING HAS BEEN PREPARED IN ELECTRONIC FORMAT. CLIENT/CLIENT'S REPRESENTATIVE OR CONSULTANT MAY BE PROVIDED COPIES OF DRAWINGS AND SPECIFICATIONS ON MAGNETIC MEDIA FOR HIS/HER INFORMATION AND USE FOR SPECIFIC APPLICATION TO THIS PROJECT. DUE TO THE POTENTIAL THAT THE MAGNETIC INFORMATION MAY BE MODIFIED UNINTENTIONALLY OR OTHERWISE, ALLEN & MAJOR ASSOCIATES, INC. MAY REMOVE ALL INDICATION OF THE DOCUMENTS AUTHORSHIP ON THE MAGNETIC MEDIA. PRINTED REPRESENTATIONS OF THE DRAWINGS AND SPECIFICATIONS ISSUED SHALL BE THE ONLY RECORD COPIES OF ALLEN & MAJOR ASSOCIATES, INC'S WORK PRODUCT.

DRAWING TITLE: LAYOUT & MATERIALS PLAN
SHEET No. C-1B

Copyright©2015 Allen & Major Associates, Inc. All Rights Reserved

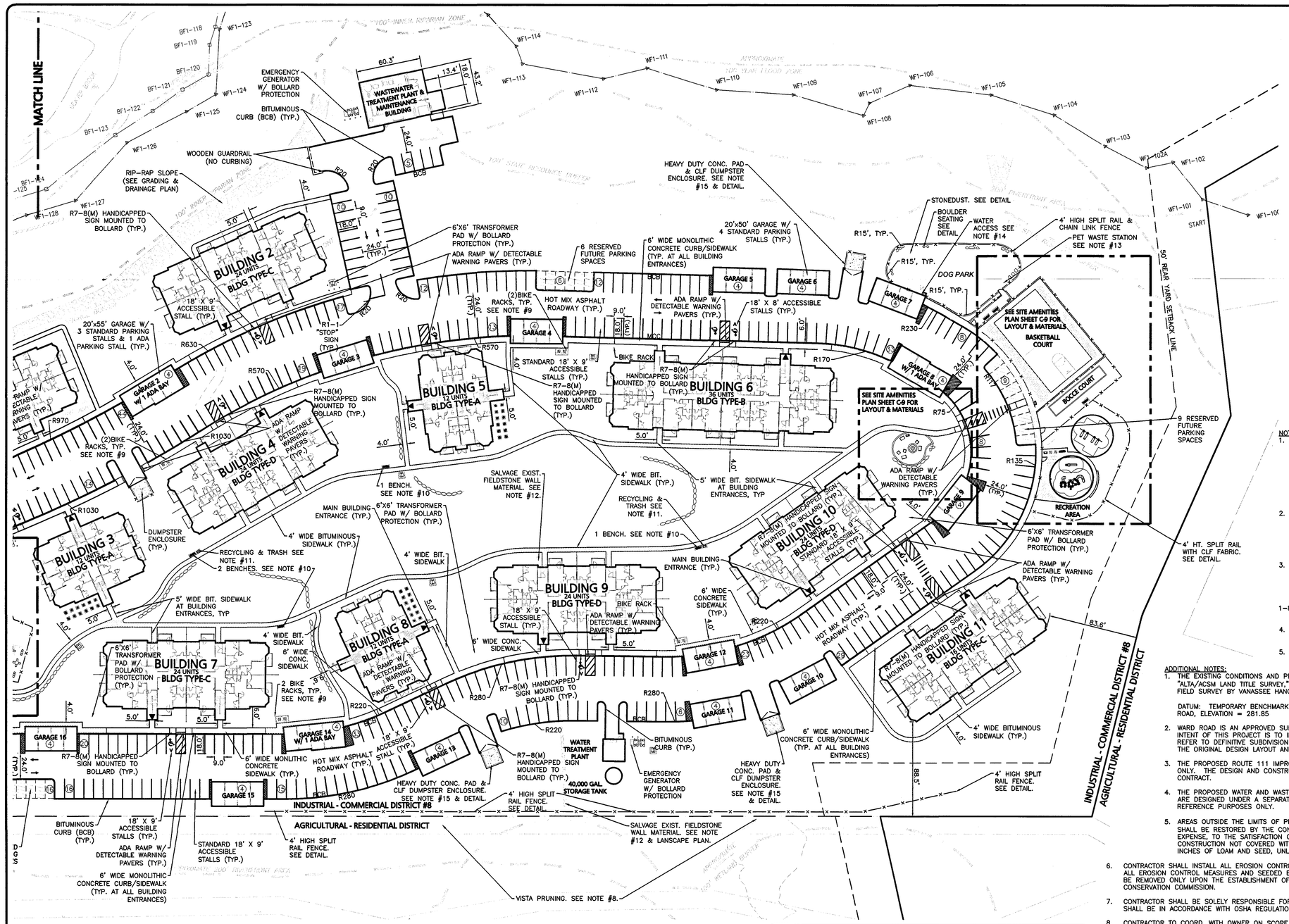

LEGEND:

- PROP. PROPERTY LINE
- SIGN
- BOLLARD
- BUILDING
- BUILDING ARCHITECTURE
- BUILDING INTERIOR WALLS
- MAIN BUILDING ENTRANCE
- CURB
- RETAINING WALL
- PARKING STRIPING
- FUTURE PARKING SPACES
- ROADWAY STRIPING
- TRAFFIC ARROWS
- HEAVY DUTY CONCRETE
- CONCRETE SIDEWALK
- BITUMINOUS SIDEWALK
- ADA ACCESSIBLE RAMP
- ADA DET. WARNING SURFACE
- GRAVEL PATH
- JERSEY BARRIERS
- SETBACK LINE
- PARKING COUNT
- FENCING. SEE PLAN FOR TYPE.
- TRANSFORMER

WAIVERS OF TOWN OF BOXBOROUGH ZONING BYLAWS:

4.4003(1) USE REGULATION SCHEDULE
WAIVER TO PERMIT SINGLE-FAMILY AND MULR-FAMILY ATTACHED RESIDENTIAL USES, NOT OTHERWISE PERMITTED IN THE INDUSTRIAL COMMERCIAL DISTRICT (I.E. THE PROPOSED TWO (2) SINGLE FAMILY DWELLINGS AND THE PROPOSED 244 APARTMENT UNITS IN ELEVEN (11) MULTI-FAMILY BUILDINGS, FOR A TOTAL OF 246 UNITS)

4.4033 USE REGULATION SCHEDULE
WAIVER TO PERMIT A USE WHICH IS NOT OTHERWISE ACCESSORY TO INDUSTRIAL-COMMERCIAL USES, I.E., A CLUBHOUSE/RENTAL OFFICE.

5.5002 DIMENSIONAL SCHEDULE
WAIVER OF REQUIREMENT FOR A MAXIMUM FLOOR AREA RATIO OF 0.10.

6.6004 SURFACE, CIRCULATION, AND LANDSCAPING REQUIREMENTS
WAIVER OF REQUIREMENT THAT AUTOMOBILE PARKING SPACES SHALL NOT BE LESS THAN 10 FEET BY 20 FEET, IN ORDER TO ALLOW PARKING SPACE OF 9 FEET BY 18 FEET.

6.6103 MULTIPLE BUILDINGS ON ONE LOT
WAIVER OF REQUIREMENT THAT WHERE MORE THAN ONE BUILDING IS PROPOSED TO BE BUILT UPON A LOT, THE PLAN SHALL BE REVIEWED BY THE PLANNING BOARD REGARDING ADEQUACY OF ACCESS TO BUILDINGS, IN ORDER TO SUBSTITUTE THE PERMISSION FROM THE ZONING BOARD OF APPEALS GRANTED UNDER THIS COMPREHENSIVE PERMIT.

6.6105 PRIVATE/COMMON DRIVEWAYS IN THE, BUSINESS, BUSINESS 1, OFFICE PARK, TOWN CENTER, AND INDUSTRIAL-COMMERCIAL DISTRICTS
WAIVER OF THE REQUIREMENT THAT PRIVATE/COMMON DRIVEWAYS ARE ALLOWED IN THE IC DISTRICT ONLY BY SPECIAL PERMIT OF THE PLANNING BOARD, IN ORDER TO SUBSTITUTE THE PERMISSION FROM THE ZONING BOARD OF APPEALS UNDER THIS COMPREHENSIVE PERMIT.

7.7004(G) SPECIAL REGULATIONS AQUIFER PROTECTION DISTRICT
WAIVER OF REQUIREMENT THAT THERE BE NO DISPOSAL OF SANITARY WASTE TO A SUBSURFACE DISPOSAL SYSTEM IN QUANTITIES EXCEEDING 440 GALLONS PER DAY PER ACRE OF AQUIFER PROTECTION DISTRICT CONTAINED WITHIN THE LOT, IN ORDER TO ALLOW QUANTITIES OF UP TO 750 GALLONS PER DAY PER ACRE OF THE SITE IN THE AQUIFER PROTECTION DISTRICT IN THE EVENT RESERVE LEACHING FIELDS ARE USED.

7.7007(1) DESIGN REQUIREMENTS
WAIVER OF REQUIREMENT THAT WHERE A PORTION OF THE SITE IS LOCATED OUTSIDE OF THE AQUIFER PROTECTION DISTRICT, POTENTIAL POLLUTION SOURCES, SUCH AS ON SITE DISPOSAL SYSTEMS, SHOULD BE LOCATED OUTSIDE THE DISTRICT BOUNDARIES, IN ORDER TO ALLOW RESERVE LEACHING FIELD TO BE LOCATED WITHIN THE AQUIFER PROTECTION DISTRICT.

7.7104(G) AND (H) W-DISTRICT USE REGULATIONS
WAIVER OF REQUIREMENTS FOR SPECIAL PERMIT FOR USE IN THE W-DISTRICT, IN ORDER TO SUBSTITUTE APPROVAL UNDER THIS COMPREHENSIVE PERMIT.

7.7108 SUBMITTALS
WAIVER OF REQUIREMENTS FOR SPECIAL PERMIT APPLICATIONS TO BE PREPARED AND SUBMITTED TO THE BOARD OF APPEALS, IN ORDER TO PERMIT ONE COMPREHENSIVE SUBMISSION TO THE BOARD TO BE ACTED UPON UNDER G.L. C. 40A, §21.

7.7109 PROCEDURES
WAIVER OF REQUIREMENT FOR SPECIAL PERMIT APPLICATIONS TO BE PREPARED AND SUBMITTED TO THE BOARD OF APPEALS IN ORDER TO PERMIT A SINGLE COMPREHENSIVE PERMIT SUBMISSION TO THE BOARD TO BE ACTED UPON UNDER G.L. C.40B, §21.

7.7200 LAND BORDERING W- & I-DISTRICT
WAIVER OF REQUIREMENT FOR SPECIAL PERMIT TO PLACE STRUCTURES WITHIN ONE HUNDRED (100') FEET OF THE W-DISTRICT, IN ORDER TO PERMIT CONSTRUCTION OF WARD ROAD AND A FIRE POND WITHIN 100' OF W-DISTRICT.

8.8000 SITE PLAN APPROVAL & DESIGN REVIEW
WAIVER OF REQUIREMENT FOR SITE PLAN REVIEW BY THE PLANNING BOARD FOR THE CONSTRUCTION OF MULTI-FAMILY STRUCTURES AND PARKING AREAS ASSOCIATED WITH MULTI-FAMILY STRUCTURES.

9.9001(2) BUILDING PERMITS
WAIVER OF REQUIREMENT THAT NO BUILDING PERMIT SHALL BE ISSUED BY THE INSPECTOR OF BUILDINGS WITHOUT THE WRITTEN APPROVAL OF A SITE PLAN BY THE PLANNING BOARD.

WAIVERS FROM TOWN OF BOXBOROUGH REGULATIONS FOR THE WETLAND BYLAW:

SECTION 2.5.3.1 PERFORMANCE STANDARDS
WAIVER OF PROHIBITION OF PARKING LOTS, PERMANENT STRUCTURES, AND SANITARY WASTE DISPOSAL SYSTEMS WITHIN ADJACENT LAND RESOURCE AREA, IN ORDER TO ALLOW THE PLACEMENT OF SANITARY WASTE DISPOSAL SYSTEM, PARKING LOT, AND ALL OTHER PERMANENT STRUCTURES WITHIN THE ADJACENT LAND RESOURCE AREA IN ACCORDANCE WITH THE SITE PLAN APPROVED FOR THE PROJECT UNDER THIS COMPREHENSIVE PERMIT.

WAIVERS FROM BOXBOROUGH COMPREHENSIVE PERMIT RULES OF THE BOARD OF APPEALS:

SECTION 3.02(I) LIST OF REQUESTED EXCEPTIONS
WAIVER OF REQUIREMENT THAT APPLICANT PROVIDES A COMPLETE LIST OF ALL REQUESTED EXCEPTIONS AT THE TIME OF THE INITIAL FILING OF THE APPLICATION IN ORDER TO PERMIT THE LIST TO BE REVISED AS THE PROJECT EVOLVES THROUGH THE HEARING AND APPROVAL PROCESS.

NOTES:
1. THE LOCATIONS OF EXISTING UNDERGROUND UTILITIES ARE SHOWN IN AN APPROXIMATE WAY ONLY AND HAVE NOT BEEN INDEPENDENTLY VERIFIED BY THE OWNER OR IT'S REPRESENTATIVE. THE CONTRACTOR SHALL DETERMINE THE EXACT LOCATION OF ALL EXISTING UTILITIES BEFORE COMMENCING WORK, AND AGREES TO BE FULLY RESPONSIBLE FOR ANY AND ALL DAMAGES WHICH MIGHT BE OCCASIONED BY THE CONTRACTOR'S FAILURE TO EXACTLY LOCATE AND PRESERVE ANY AND ALL UNDERGROUND UTILITIES.
2. THE INFORMATION SHOWN ON THIS PLAN IS THE SOLE PROPERTY OF ALLEN & MAJOR ASSOCIATES, INC. IT'S INTENDED USE IS TO PROVIDE INFORMATION. ANY ALTERATION, MISUSE, OR RECALCULATION OF INFORMATION OR DATA WITHOUT THE EXPRESSED, WRITTEN CONSENT OF ALLEN & MAJOR ASSOCIATES, INC. IS STRICTLY PROHIBITED.
3. THE CONTRACTOR SHALL CONTACT "DIGSAFE" AND THE TOWN OF BOXBOROUGH DEPARTMENT OF PUBLIC WORKS AT LEAST 72 HOURS PRIOR TO ANY EXCAVATION WORK TO REQUEST THE LOCATION OF THE EXISTING UTILITIES.

DIGSAFE:
1-800-344-7233
BOXBOROUGH DEPT. OF PUBLIC WORKS: 1-978-264-1790

4. SEE THE ABBREVIATIONS AND NOTES PLAN AND DETAILS FOR FURTHER INFORMATION.
5. ALL CURBING RADII SHALL BE 3' UNLESS OTHERWISE NOTED.

ADDITIONAL NOTES:
1. THE EXISTING CONDITIONS AND PROPERTY LINES SHOWN ARE BASED ON A PLAN ENTITLED "ALTA/ACSM LAND TITLE SURVEY," DATED SEPTEMBER 25, 2014 COMPRISED FROM AN ACTUAL FIELD SURVEY BY VANASSEE HANGEN BRUSTLIN, INC. IN SEPTEMBER 2014.

   DATUM: TEMPORARY BENCHMARK AT UTILITY POLE #6 ON CUNNINGHAM ROAD AT WARD ROAD, ELEVATION = 281.85
2. WARD ROAD IS AN APPROVED SUBDIVISION ROADWAY THAT IS PARTIALLY CONSTRUCTED. THE INTENT OF THIS PROJECT IS TO IMPROVE THE WARD ROAD DRAINAGE SYSTEM AS SHOWN HEREIN. REFER TO DEFINITIVE SUBDIVISION PLANS BY ANDERSON-NICHOLS, DATED JUNE 15, 1989, FOR THE ORIGINAL DESIGN LAYOUT AND LIGHTING INFORMATION.
3. THE PROPOSED ROUTE 111 IMPROVEMENTS ARE SHOWN HEREIN FOR REFERENCES PURPOSES ONLY. THE DESIGN AND CONSTRUCTION OF ROUTE 111 IMPROVEMENTS ARE UNDER A SEPARATE CONTRACT.
4. THE PROPOSED WATER AND WASTEWATER TREATMENT PLANTS FOR JEFFERSON AT BEAVER BROOK ARE DESIGNED UNDER A SEPARATE CONTRACT. THESE FACILITIES ARE SHOWN HEREIN FOR REFERENCE PURPOSES ONLY.
5. AREAS OUTSIDE THE LIMITS OF PROPOSED WORK DISTURBED BY THE CONTRACTOR'S OPERATIONS SHALL BE RESTORED BY THE CONTRACTOR TO THEIR ORIGINAL CONDITION AT THE CONTRACTOR'S EXPENSE, TO THE SATISFACTION OF THE OWNER OR ENGINEER. ALL AREAS DISTURBED DURING CONSTRUCTION NOT COVERED WITH BUILDINGS, STRUCTURES, OR PAVEMENTS SHALL RECEIVE SIX INCHES OF LOAM AND SEED, UNLESS DIRECTED OTHERWISE BY THE ENGINEER OR OWNER.
6. CONTRACTOR SHALL INSTALL ALL EROSION CONTROL MEASURES PRIOR TO EARTHWORK OPERATION AND MAINTAIN ALL EROSION CONTROL MEASURES AND SEEDED EMBANKMENTS DURING CONSTRUCTION. EROSION CONTROL SHALL BE REMOVED ONLY UPON THE ESTABLISHMENT OF ALL LANDSCAPED AREAS AND WHEN AUTHORIZED BY THE CONSERVATION COMMISSION.
7. CONTRACTOR SHALL BE SOLELY RESPONSIBLE FOR SITE SECURITY AND JOB SAFETY. ALL CONSTRUCTION ACTIVITY SHALL BE IN ACCORDANCE WITH OSHA REGULATIONS AND STATE AND LOCAL REQUIREMENTS.
8. CONTRACTOR TO COORD. WITH OWNER ON SCOPE OF WORK FOR VISTA PRUNING OF EXISTING TREES ON APPLICANTS PROPERTY FOR VIEW OF HORSE FARM. VISTA PRUNING SCOPE TO ONLY INCLUDE TRIMMING OF SOME TREE LIMBS AND REMOVAL OF SOME LIMITED SMALL BRUSH, NO TREE REMOVAL.
9. BIKE RACKS TO BE FROM LANDSCAPE FORMS; 1-800-430-6209 MODEL FLO BIKE RACK 28" X 26" X 32" POWERCOATED AND SURFACE MOUNTED TO 12' X 6.5' BIT. CONC. PAD (EXCEPT RECREATION AREA RACK MOUNTED TO BIT. CONC.). SURFACE MOUNT PER MANUFACTURERS RECOMMENDATIONS. POWERCOAT COLOR SELECTED BY OWNER. PROVIDE SHOP DRAWINGS FOR APPROVAL PRIOR TO ORDERING.
10. BENCHES TO BE FROM LANDSCAPE FORMS; MODEL: VILLAGE GREEN BENCH WITH END ARMS. 25" X 32" X 70". POWERCOAT COLOR SELECTED BY OWNER. BENCHES TO BE PERMEANENT SURFACE MOUNTED TO CONCRETE WITH APPROPRIATE HARDWARE PER MANUFACTURERS RECOMMENDATIONS. PROVIDE SHOP DRAWINGS FOR APPROVAL PRIOR TO ORDERING.
11. TRASH AND RECYCLING BINS TO BE FROM LANDSCAPE FORMS "SORT" 3 BIN TRASH AND RECYCLING SYSTEM. INSTALL PER MANUFACTURERS RECOMMENDATIONS. COLOR & FINISH CHOSEN BY OWNER. PROVIDE SHOP DRAWING TO A&M FOR APPROVAL PRIOR TO ORDERING.
12. CONTRACTOR TO CAREFULLY SALVAGE EXISTING FIELDSTONE RETAINING WALL MATERIAL IN AREAS WHICH WILL BE DISTURBED BY THE PROPOSED PROJECT. NOT ALL AREAS OF EXISTING FIELDSTONE WALLS ONSITE HAVE BEEN SHOWN ON THE EXISTING CONDITIONS SURVEY. CONTRACTOR TO DETERMINE AMOUNT OF EXISTING FIELDSTONE WALLS TO SALVAGE IN ORDER TO HAVE ENOUGH MATERIAL ONSITE FOR THE PROPOSED FIELDSTONE WALLS. SALVAGED STONES TO BE SAVED IN AN ONSITE LOCATION WHICH WILL NOT BE DISTURBED BY THE PROPOSED CONSTRUCTION ACTIVITIES. SEE LANDSCAPE PLAN FOR PROPOSED LOCATION AND LENGTH OF FIELDSTONE WALLS.
13. PET WASTE STATION TO BE BY PET WASTE ELIMINATOR, MODEL #E3 (WWW.PETWASTEELIMINATOR.COM) OR APPROVED EQUAL. INSTALL PER MANUFACTURERS RECOMMENDATIONS. COLOR CHOSEN BY OWNER. PROVIDE SHOP DRAWING TO A&M FOR APPROVAL PRIOR TO ORDERING.
14. DOG WATER FOUNTAIN TO BE BY K9GUZZLER, (WWW.K9GUZZLER.COM) OR APPROVED EQUAL. PROVIDE SHOP DRAWING TO A&M FOR APPROVAL PRIOR TO ORDERING. COLOR CHOSEN BY OWNER. INSTALL PER MANUFACTURERS RECOMMENDATIONS ON CONCRETE PAD WITH DRAINAGE CHANNEL BENEATH FOUNTAIN. PLUMBER TO INSTALL 3/8 NPT FEMALE PIPE FITTING TERMINATION ON 1" WATER SUPPLY LINE CONNECTION.
15. AT DUMPSTER ENCLOSURE AREAS INSTALL PVC PRIVACY SLATS ON CLF. COORD. WITH OWNER FOR FINAL FENCE HT. FINAL FENCE HT. BASED ON OWNER SELECTED DUMPSTER HEIGHT. FENCE TO BE AT LEAST 12" ABOVE DUMPSTER HEIGHT. FOR PRICING PURPOSES ONLY ASSUME 9' HT. FENCING.

GRAPHIC SCALE
40 0 20 40 80 160
(IN FEET)
1 inch = 40 ft.

N:\PROJECTS\2075-01\CIVIL\DRAWINGS\CURRENT\2075-01 - LAYOUT.DWG

DIMENSIONAL REQUIREMENTS: INDUSTRIAL - COMMERCIAL (IC) DISTRICT

ITEM	REQUIRED/ALLOWED	EXISTING	PROPOSED
LOT AREA (MIN.)	80,000 S.F. 1.84 ACRES	2,834,533 S.F. 65.07± ACRES	2,834,533 S.F. 65.07± ACRES
UPLAND LOT AREA (MIN.)	20%	74.5%	74.5%
LOT FRONTAGE (MIN.)	200'	679.9'	679.9'
LOT WIDTH (MIN.)	125'	>125'	>125'
FRONT YARD BUILDING SETBACK	50' (MIN.)	N/A	467.2'
SIDE YARD BUILDING SETBACK	50' (MIN.)	N/A	88.5'
REAR YARD BUILDING SETBACK	50' (MIN.)	N/A	83.6'
LOT COVERAGE (MAX.)	30%	N/A	12.8%
BUILDING STORIES (MAX.)	3 STORIES	N/A	3 STORIES
BUILDING HEIGHT (MAX.)	45'	N/A	35'
FLOOR AREA RATIO	0.10	N/A	0.11

* MULTI-FAMILY DWELLINGS SHALL BE ALLOWED IN THE INDUSTRIAL-COMMERCIAL DISTRICT THROUGH A COMPREHENSIVE PERMIT

OFF-STREET PARKING SUMMARY

USE: RESIDENTIAL USES, INCLUDING SINGLE FAMILY, TWO FAMILY, AND MULTI-FAMILY

1.85 SPACES PER UNIT

PARKING SUMMARY:

MULTI-FAMILY 244 UNITS x 1.85 SPACES/UNIT =451 SPACES
TOTAL OFF-STREET PARKING REQUIREMENT =451 SPACES

ADA REQUIRED: THERE ARE BETWEEN 401-500 PARKING SPACES, REQUIRING 9 TOTAL PARKING STALLS TO BE ACCESSIBLE.

ADA PROVIDED: 18 TOTAL ACCESSIBLE PARKING, WITH 12 BEING VAN ACCESSIBLE & 3 LOCATED IN PARKING GARAGES.

**37 LAND BANKED RESERVED FUTURE PARKING STALLS

UNCOVERED PARKING		GARAGE PARKING		TOTAL PROVIDED	TOTAL REQUIRED	**TOTAL FUTURE BUILD-OUT
STANDARD (9' x 18')	ACCESSIBLE (9'x18')	STANDARD (9' x 18')	ACCESSIBLE (9'x18')			
372	15	61	3	451	451	488

WETLAND RESOURCE SUMMARY

ITEM	PROPOSED
LOT AREA	2,834,533± S.F.
IMPACTED LOT AREA	836,681± S.F.
TOTAL PARCEL BVW AREA	719,330± S.F
PERMANENT BVW DISTURBANCE	628± S.F. (NOTE 1)
PROPOSED BVW REPLICATION AREA	628± S.F. (NOTE 2)
TOTAL WETLAND REPLICATION RATIO	1 : 1
TOTAL PARCEL 100' BVW BUFFER	864,447± S.F.
DISTURBANCE WITHIN 100-FOOT BVW BUFFER	126,020± S.F.
TOTAL PARCEL 200' RIVERFRONT AREA	1,306,545± S.F.
RIVERFRONT AREA DISTURBANCE	130,598± S.F.
RIVERFRONT AREA DISTURBANCE/TOTAL RIVERFRONT AREA	9.9%

NOTES:
1. PERMANENT BVW DISTURBANCE DOES NOT INCLUDE 129 S.F. TEMPORARY BVW DISTURBANCE.
2. SEE LANDSCAPE PLAN FOR WETLAND DISTURBANCE AND REPLICATION AREAS.

DIG SAFE
BEFORE YOU DIG CALL 811 OR 1-888-DIG-SAFE 1-888-344-7233

JPI

COMMONWEALTH OF MASSACHUSETTS TIMOTHY J. WILLIAMS CIVIL No. 43119 REGISTERED PROFESSIONAL ENGINEER

PROFESSIONAL ENGINEER FOR ALLEN & MAJOR ASSOCIATES, INC.

REV	DATE	DESCRIPTION
9.	07/08/2015	ISSUED FOR DEFINITIVE SITE PLAN
8.	06/12/2015	REVISED PER FIRE DEPARTMENT COMMENTS
7.	05/15/2015	ISSUED FOR PERMIT
6.	05/05/2015	ISSUED FOR DEP PERMIT APPROVAL
5.	05/04/2015	REVISED FOR PRICING
4.	03/26/2015	REVISED PER TOWN COMMENTS
3.	03/02/2015	ISSUED FOR MEPA
2.	02/27/2015	REVISED PER TOWN COMMENTS
1.	02/12/2015	ISSUED FOR ZONING BOARD OF APPEALS

APPLICANT:
JPI
3 WEST MAIN STREET, SUITE 203
IRVINGTON, NY 10533

PROJECT:
DEFINITIVE SITE PLAN SET
JEFFERSON AT BEAVER BROOK
BOXBOROUGH, MA

PROJECT NO.	2075-01	DATE:	02-11-2015
SCALE:	1"=40'	DWG. NAME:	C2075-10
DESIGNED BY:	SJL	CHECKED BY:	CMQ

PREPARED BY:

ALLEN & MAJOR ASSOCIATES, INC.
civil & structural engineering • land surveying
environmental consulting • landscape architecture
www.allenmajor.com
100 COMMERCE WAY
P.O. BOX 9118
WOBURN MA 01888-0118
TEL: (781) 935-6889
FAX: (781) 935-2896
WOBURN, MA • LAKEVILLE, MA • MANCHESTER, NH

THIS DRAWING HAS BEEN PREPARED IN ELECTRONIC FORMAT. CLIENT/CLIENT'S REPRESENTATIVE OR CONSULTANT MAY BE PROVIDED COPIES OF DRAWINGS AND SPECIFICATIONS ON MAGNETIC MEDIA FOR HIS/HER INFORMATION AND USE FOR SPECIFIC APPLICATION TO THIS PROJECT. DUE TO THE POTENTIAL THAT THE MAGNETIC INFORMATION MAY BE MODIFIED UNINTENTIONALLY OR OTHERWISE, ALLEN & MAJOR ASSOCIATES, INC. MAY REMOVE ALL INDICATION OF THE DOCUMENT'S AUTHORSHIP ON THE MAGNETIC MEDIA. PRINTED REPRESENTATIONS OF THE DRAWINGS AND SPECIFICATIONS ISSUED SHALL BE THE ONLY RECORD COPIES OF ALLEN & MAJOR ASSOCIATES, INC.'S WORK PRODUCT.

DRAWING TITLE: LAYOUT & MATERIALS PLAN

SHEET No. C-1C

Copyright©2015 Allen & Major Associates, Inc. All Rights Reserved

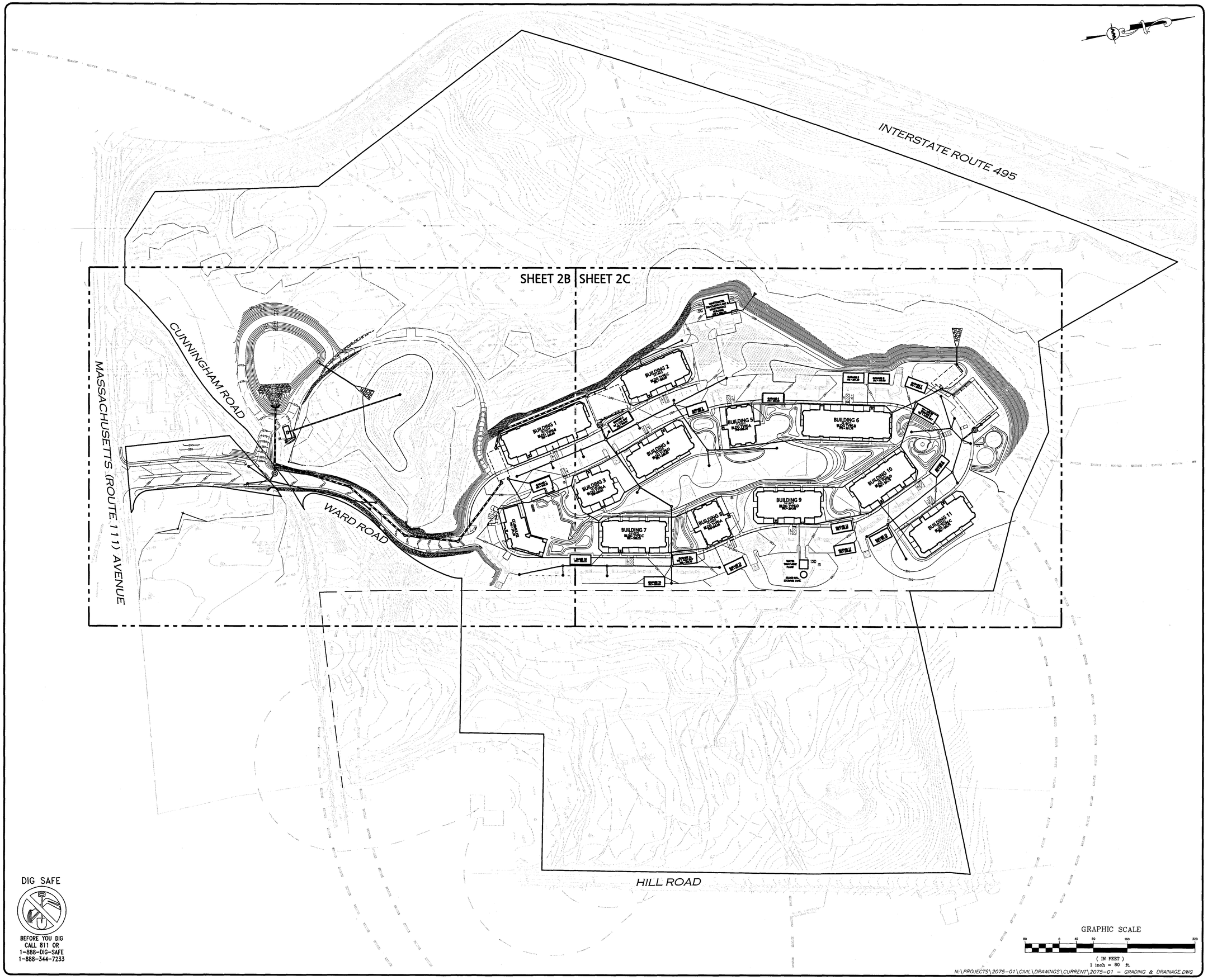

DIG SAFE

BEFORE YOU DIG
CALL 811 OR
1-888-DIG-SAFE
1-888-344-7233

JPI

WAIVERS OF TOWN OF BOXBOROUGH ZONING BYLAWS:

4.4003(1) USE REGULATION SCHEDULE
WAIVER TO PERMIT SINGLE-FAMILY AND MULTI-FAMILY ATTACHED RESIDENTIAL USES IN THE TOWN-HOUSE PERMITTED IN THE INDUSTRIAL-COMMERCIAL DISTRICT (I.E., THE PROPOSED TWO (2) SINGLE FAMILY DWELLINGS AND THE PROPOSED 244 APARTMENT UNITS IN ELEVEN (11) MULTI-FAMILY BUILDINGS, FOR A TOTAL OF 246 UNITS)

4.4033 USE REGULATION SCHEDULE
WAIVER TO PERMIT A USE WHICH IS NOT OTHERWISE ACCESSORY TO INDUSTRIAL-COMMERCIAL USES, I.E., A CLUBHOUSE/RENTAL OFFICE.

5.5002 DIMENSIONAL SCHEDULE
WAIVER OF REQUIREMENT FOR A MAXIMUM FLOOR AREA RATIO OF 0.10.

6.6004 SURFACE, CIRCULATION, AND LANDSCAPING REQUIREMENTS
WAIVER OF REQUIREMENT THAT AUTOMOBILE PARKING SPACES SHALL NOT BE LESS THAN 10 FEET BY 20 FEET, IN ORDER TO ALLOW PARKING SPACE OF 9 FEET BY 18 FEET.

6.6103 MULTIPLE BUILDINGS ON ONE LOT
WAIVER OF REQUIREMENT THAT WHERE MORE THAN ONE BUILDING IS PROPOSED TO BE BUILT UPON A LOT, THE PLAN SHALL BE REVIEWED BY THE PLANNING BOARD REGARDING ADEQUACY OF ACCESS TO BUILDINGS, IN ORDER TO SUBSTITUTE THE PERMISSION FROM THE ZONING BOARD OF APPEALS GRANTED UNDER THIS COMPREHENSIVE PERMIT.

6.6105 PRIVATE/COMMON DRIVEWAYS IN THE BUSINESS, BUSINESS 1, OFFICE PARK, TOWN CENTER, AND INDUSTRIAL-COMMERCIAL DISTRICTS
WAIVER OF THE REQUIREMENT THAT PRIVATE/COMMON DRIVEWAYS ARE ALLOWED IN THE IC DISTRICT ONLY BY SPECIAL PERMIT OF THE PLANNING BOARD, IN ORDER TO SUBSTITUTE THE PERMISSION FROM THE ZONING BOARD OF APPEALS UNDER THIS COMPREHENSIVE PERMIT.

7.7004(G) SPECIAL REGULATIONS AQUIFER PROTECTION DISTRICT
WAIVER OF REQUIREMENT THAT THERE BE NO DISPOSAL OF SANITARY WASTE TO A SUBSURFACE DISPOSAL SYSTEM IN QUANTITIES EXCEEDING 440 GALLONS PER DAY PER ACRE OF AQUIFER PROTECTION DISTRICT CONTAINED WITHIN THE LOT, IN ORDER TO ALLOW QUANTITIES OF UP TO 750 GALLONS PER DAY PER ACRE OF THE SITE IN THE AQUIFER PROTECTION DISTRICT IN THE EVENT RESERVE LEACHING FIELDS ARE USED.

7.7007(1) DESIGN REQUIREMENTS
WAIVER OF REQUIREMENT THAT WHERE A PORTION OF THE SITE IS LOCATED OUTSIDE OF THE AQUIFER PROTECTION DISTRICT, POTENTIAL POLLUTION SOURCES, SUCH AS ON SITE DISPOSAL SYSTEMS, SHOULD BE LOCATED OUTSIDE THE DISTRICT BOUNDARIES, IN ORDER TO ALLOW RESERVE LEACHING FIELD TO BE LOCATED WITHIN THE AQUIFER PROTECTION DISTRICT.

7.7104(G) AND (H) W-DISTRICT USE REGULATIONS
WAIVER OF REQUIREMENTS FOR SPECIAL PERMIT FOR USE IN THE W-DISTRICT, IN ORDER TO SUBSTITUTE APPROVAL UNDER THIS COMPREHENSIVE PERMIT.

7.7105 SUBMITTALS
WAIVER OF REQUIREMENTS FOR SPECIAL PERMIT APPLICATIONS TO BE PREPARED AND SUBMITTED TO THE BOARD OF APPEALS, IN ORDER TO PERMIT ONE COMPREHENSIVE SUBMISSION TO THE BOARD TO BE ACTED ON UNDER G.L. C. 40B, §21.

7.7109 PROCEDURES
WAIVER OF REQUIREMENT FOR SPECIAL PERMIT APPLICATIONS TO BE PREPARED AND SUBMITTED TO THE BOARD OF APPEALS IN ORDER TO PERMIT A SINGLE COMPREHENSIVE PERMIT SUBMISSION TO THE BOARD TO BE ACTED UPON UNDER G.L. C.40B, §21.

7.7200 LANDS BORDERING THE W-DISTRICT
WAIVER OF REQUIREMENT FOR SPECIAL PERMIT TO PLACE STRUCTURES WITHIN ONE HUNDRED (100') FEET OF THE W-DISTRICT, IN ORDER TO PERMIT CONSTRUCTION OF WARD ROAD AND A FIRE POND WITHIN 100' OF W-DISTRICT.

8.8000 SITE PLAN APPROVAL & DESIGN REVIEW
WAIVER OF REQUIREMENT FOR SITE PLAN REVIEW BY THE PLANNING BOARD FOR THE CONSTRUCTION OF MULTI-FAMILY STRUCTURES AND PARKING AREAS ASSOCIATED WITH MULTI-FAMILY STRUCTURES.

8.9001(2) BUILDING PERMITS
WAIVER OF REQUIREMENT THAT NO BUILDING PERMIT SHALL BE ISSUED BY THE INSPECTOR OF BUILDINGS WITHOUT THE WRITTEN APPROVAL OF A SITE PLAN BY THE PLANNING BOARD.

WAIVERS FROM TOWN OF BOXBOROUGH REGULATIONS FOR THE WETLAND STUDY:

SECTION 2.5.3.1 PERFORMANCE STANDARDS
WAIVER OF PROHIBITION OF PARKING LOTS, PERMANENT STRUCTURES, AND SANITARY WASTE DISPOSAL SYSTEMS WITHIN ADJACENT LAND RESOURCE AREA, IN ORDER TO ALLOW THE PLACEMENT OF THE PROPOSED SANITARY WASTE DISPOSAL SYSTEM, PARKING LOT, ROAD AND OTHER PERMANENT STRUCTURES WITHIN THE ADJACENT LAND RESOURCE AREA, IN ACCORDANCE WITH THE SITE PLAN APPROVED FOR THE PROJECT UNDER THIS COMPREHENSIVE PERMIT.

WAIVERS FROM BOXBOROUGH COMPREHENSIVE PERMIT RULES OF THE ZONING BOARD OF APPEALS:

SECTION 3.02(1) LIST OF REQUESTED EXCEPTIONS
WAIVER OF REQUIREMENT THAT APPLICANT PROVIDES A COMPLETE LIST OF ALL REQUESTED EXCEPTIONS AT THE TIME OF THE INITIAL FILING OF THE APPLICATION IN ORDER TO PERMIT THE LIST TO BE REVISED AS THE PROJECT EVOLVES THROUGH THE HEARING AND APPROVAL PROCESS.

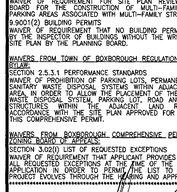

PROFESSIONAL ENGINEER FOR
ALLEN & MAJOR ASSOCIATES, INC.

REV	DATE	DESCRIPTION
9.	07/08/2015	ISSUED FOR DEFINITIVE SITE PLAN
8.	06/12/2015	REVISED PER FIRE DEPARTMENT COMMENTS
7.	05/15/2015	ISSUED FOR PERMIT
6.	05/05/2015	ISSUED FOR DEP PERMIT APPROVAL
5.	05/04/2015	REVISED FOR PRICING
4.	03/26/2015	REVISED PER TOWN COMMENTS
3.	03/02/2015	ISSUED FOR MEPA
2.	02/27/2015	REVISED PER TOWN COMMENTS
1.	02/12/2015	ISSUED FOR ZONING BOARD OF APPEALS

APPLICANT:

JPI
3 WEST MAIN STREET, SUITE 203
IRVINGTON, NY 10533

PROJECT:

DEFINITIVE SITE PLAN SET
JEFFERSON AT BEAVER BROOK
BOXBOROUGH, MA

PROJECT NO.	2075-01	DATE:	02-11-2015
SCALE:	1"=80'	DWG. NAME:	C2075-10
DESIGNED BY:	SJL	CHECKED BY:	CMQ

PREPARED BY:

ALLEN & MAJOR ASSOCIATES, INC.
civil & structural engineering ◆ land surveying
environmental consulting ◆ landscape architecture
www.allenmajor.com
100 COMMERCE WAY
P.O. BOX 2118
WOBURN MA 01888-0118
TEL: (781) 935-6889
FAX: (781) 935-2896
WOBURN, MA ◆ LAKEVILLE, MA ◆ MANCHESTER, NH

THIS DRAWING HAS BEEN PREPARED IN ELECTRONIC FORMAT. CLIENT/CLIENT'S REPRESENTATIVE OR CONSULTANT MAY BE PROVIDED COPIES OF DRAWINGS AND SPECIFICATIONS ON MAGNETIC MEDIA FOR HIS/HER INFORMATION AND USE FOR SPECIFIC APPLICATION TO THIS PROJECT. DUE TO THE POTENTIAL THAT THE MAGNETIC INFORMATION MAY BE MODIFIED UNINTENTIONALLY OR OTHERWISE, ALLEN & MAJOR ASSOCIATES, INC. MAY REMOVE ALL INDICATION OF THE DOCUMENT'S AUTHORSHIP ON THE MAGNETIC MEDIA. PRINTED REPRESENTATIONS OF THE DRAWINGS AND SPECIFICATIONS ISSUED SHALL BE THE ONLY RECORD COPIES OF ALLEN & MAJOR ASSOCIATES, INC.'S WORK PRODUCT.

DRAWING TITLE:

GRADING & DRAINAGE PLAN

SHEET No.

C-2A

Copyright©2015 Allen & Major Associates, Inc.
All Rights Reserved

LEGEND:

DRAIN MANHOLE	
OUTLET CONTROL STRUCTURE	
GAS/OIL SEPARATOR	
STORMCEPTOR	
VENT	
CATCH BASIN	
AREA DRAIN	
CLEAN OUT (CO)	
FLARED END SECTION	
OIL/GRIT SEPARATOR	
DRAIN LINE	
RIPRAP OUTFALL	
HEADWALL	
5' CONTOUR	150
1' CONTOUR	128
SPOT GRADE	x128
LIMIT OF INFILTRATION STONE	
INFILTRATION CHAMBERS	

DIG SAFE

BEFORE YOU DIG CALL 811 OR 1-888-DIG-SAFE 1-888-344-7233

GRAPHIC SCALE

40 0 20 40 80 160

(IN FEET)
1 inch = 40 ft.

N:\PROJECTS\2075-01\CIVIL\DRAWINGS\CURRENT\2075-01 - GRADING & DRAINAGE.DWG

JPI

WAIVERS OF TOWN OF BOXBOROUGH ZONING BYLAWS:
4.4003(1) USE REGULATION SCHEDULE
WAIVER TO PERMIT SINGLE-FAMILY AND MULTI-FAMILY ATTACHED RESIDENTIAL USES IS NOT OTHERWISE PERMITTED IN THE INDUSTRIAL COMMERCIAL DISTRICT (I.E. THE PROPOSED TEN (10) SINGLE-FAMILY DWELLINGS AND THE PROPOSED 244 APARTMENT UNITS IN ELEVEN (11) MULTI-FAMILY BUILDINGS, FOR A TOTAL OF 246 UNITS)
4.4033 USE REGULATION SCHEDULE
WAIVER TO PERMIT A USE WHICH IS NOT OTHERWISE ACCESSORY TO INDUSTRIAL-COMMERCIAL USES, I.E., A CLUBHOUSE/RENTAL OFFICE.
5.5002 DIMENSIONAL SCHEDULE
WAIVER OF REQUIREMENT FOR A MAXIMUM FLOOR AREA RATIO OF 0.10.
6.6004 SURFACE, CIRCULATION, AND LANDSCAPING REQUIREMENTS
WAIVER OF REQUIREMENT THAT AUTOMOBILE PARKING SPACES SHALL NOT BE LESS THAN 10 FEET BY 20 FEET, IN ORDER TO ALLOW PARKING SPACE OF 9 FEET BY 18 FEET.
6.6103 MULTIPLE BUILDINGS ON ONE LOT
WAIVER OF REQUIREMENT THAT WHERE MORE THAN ONE BUILDING IS PROPOSED TO BE BUILT UPON A LOT, THE PLAN SHALL BE REVIEWED BY THE PLANNING BOARD REGARDING ADEQUACY OF ACCESS TO BUILDINGS IN ORDER TO SUBSTITUTE THE PERMISSION FROM THE ZONING BOARD OF APPEALS GRANTED UNDER THIS COMPREHENSIVE PERMIT.
6.6105 PRIVATE/COMMON DRIVEWAYS IN THE BUSINESS, BUSINESS 1, OFFICE PARK, TOWN CENTER, AND INDUSTRIAL-COMMERCIAL DISTRICTS
WAIVER OF THE REQUIREMENT THAT PRIVATE/COMMON DRIVEWAYS ARE ALLOWED IN THE C DISTRICT ONLY BY SPECIAL PERMIT OF THE PLANNING BOARD, IN ORDER TO SUBSTITUTE THE PERMISSION FROM THE ZONING BOARD OF APPEALS UNDER THIS COMPREHENSIVE PERMIT.
7.7004(G) SPECIAL REGULATIONS AQUIFER PROTECTION DISTRICT
WAIVER OF REQUIREMENT THAT THERE BE NO DISPOSAL OF SANITARY WASTE TO A SUBSURFACE DISPOSAL SYSTEM IN QUANTITIES EXCEEDING 440 GALLONS PER DAY PER ACRE OF AQUIFER PROTECTION DISTRICT CONTAINED WITHIN THE LOT, IN ORDER TO ALLOW QUANTITIES OF UP TO 750 GALLONS PER DAY PER ACRE OF THE SITE IN THE AQUIFER PROTECTION DISTRICT IN THE EVENT RESERVE LEACHING FIELDS ARE USED.
7.7007(1) DESIGN REQUIREMENTS
WAIVER OF REQUIREMENT THAT WHERE A PORTION OF THE SITE IS LOCATED OUTSIDE OF THE AQUIFER PROTECTION DISTRICT, POTENTIAL POLLUTION SOURCES, SUCH AS ON SITE DISPOSAL SYSTEMS, SHOULD BE LOCATED OUTSIDE THE DISTRICT BOUNDARIES, IN ORDER TO ALLOW RESERVE LEACHING FIELD TO BE LOCATED WITHIN THE AQUIFER PROTECTION DISTRICT.
7.7104(G) AND (H) W-DISTRICT USE REGULATIONS
WAIVER OF REQUIREMENTS FOR SPECIAL PERMIT FOR USE IN THE W-DISTRICT, IN ORDER TO SUBSTITUTE APPROVAL UNDER THIS COMPREHENSIVE PERMIT.
7.7108 SUBMITTALS
WAIVER OF REQUIREMENTS FOR SPECIAL PERMIT APPLICATIONS TO BE PREPARED AND SUBMITTED TO THE BOARD OF APPEALS, IN ORDER TO PERMIT ONE COMPREHENSIVE SUBMISSION TO THE BOARD TO BE ACTED ON UNDER G.L. C. 40B, §21.
7.7109 PROCEDURES
WAIVER OF REQUIREMENT FOR SPECIAL PERMIT APPLICATIONS TO BE PREPARED AND SUBMITTED TO THE BOARD OF APPEALS IN ORDER TO PERMIT A SINGLE COMPREHENSIVE PERMIT SUBMISSION TO THE BOARD TO BE ACTED UPON UNDER G.L. C.40B, §21.
7.7200 LANDS BORDERING THE W-DISTRICT
WAIVER OF REQUIREMENT FOR SPECIAL PERMIT TO PLACE STRUCTURES WITHIN ONE HUNDRED (100') FEET OF THE W-DISTRICT, IN ORDER TO PERMIT CONSTRUCTION OF WARD ROAD AND A FIRE POND WITHIN 100' OF W-DISTRICT.
8.8000 SITE PLAN APPROVAL & DESIGN REVIEW
WAIVER OF REQUIREMENT FOR SITE PLAN REVIEW BY THE PLANNING BOARD FOR THE CONSTRUCTION OF MULTI-FAMILY STRUCTURES AND PARKING AREAS ASSOCIATED WITH MULTI-FAMILY STRUCTURES.
9.9001(2) BUILDING PERMITS
WAIVER OF REQUIREMENT THAT NO BUILDING PERMIT SHALL BE ISSUED BY THE INSPECTOR OF BUILDINGS WITHOUT THE WRITTEN APPROVAL OF A SITE PLAN BY THE PLANNING BOARD.

WAIVERS FROM TOWN OF BOXBOROUGH REGULATIONS FOR THE WETLAND BYLAW:
SECTION 2.5.3.1 PERFORMANCE STANDARDS
WAIVER OF PROHIBITION OF PARKING LOTS, PERMANENT, STRUCTURES, AND SANITARY WASTE DISPOSAL SYSTEMS WITHIN ADJACENT LAND RESOURCE AREA, IN ORDER TO ALLOW THE PLACEMENT OF THE PROPOSED SANITARY WASTE DISPOSAL SYSTEM, PARKING LOT, ROAD AND OTHER PERMANENT STRUCTURES WITHIN THE ADJACENT LAND RESOURCE AREA IN ACCORDANCE WITH THE SITE PLAN APPROVED FOR THE PROJECT UNDER THIS COMPREHENSIVE PERMIT.

WAIVERS FROM BOXBOROUGH COMPREHENSIVE PERMIT RULES OF THE ZONING BOARD OF APPEALS:
SECTION 3.02(I) LIST OF REQUESTED EXCEPTIONS
WAIVER OF REQUIREMENT THAT APPLICANT PROVIDES A COMPLETE LIST OF ALL REQUESTED EXCEPTIONS AT THE TIME OF THE INITIAL FILING OF THE APPLICATION IN ORDER TO PERMIT THE LIST TO BE REVISED AS THE PROJECT EVOLVES THROUGH THE HEARING AND APPROVAL PROCESS.

COMMONWEALTH OF MASSACHUSETTS TIMOTHY J. WILLIAMS CIVIL No.43119 REGISTERED PROFESSIONAL ENGINEER 7/9/15

PROFESSIONAL ENGINEER FOR ALLEN & MAJOR ASSOCIATES, INC.

REV	DATE	DESCRIPTION
9.	07/08/2015	ISSUED FOR DEFINITIVE SITE PLAN
8.	06/12/2015	REVISED PER FIRE DEPARTMENT COMMENTS
7.	05/15/2015	ISSUED FOR PERMIT
6.	05/05/2015	ISSUED FOR DEP PERMIT APPROVAL
5.	05/04/2015	REVISED FOR PRICING
4.	03/26/2015	REVISED PER TOWN COMMENTS
3.	03/02/2015	ISSUED FOR MEPA
2.	02/27/2015	REVISED PER TOWN COMMENTS
1.	02/12/2015	ISSUED FOR ZONING BOARD OF APPEALS

APPLICANT:

JPI
3 WEST MAIN STREET, SUITE 203
IRVINGTON, NY 10533

PROJECT:

DEFINITIVE SITE PLAN SET
JEFFERSON AT BEAVER BROOK
BOXBOROUGH, MA

PROJECT NO.	2075-01	DATE:	02-11-2015
SCALE:	1"=40'	DWG. NAME:	C2075-10
DESIGNED BY:	SJL	CHECKED BY:	CMQ

PREPARED BY:

ALLEN & MAJOR ASSOCIATES, INC.
civil & structural engineering ◆ land surveying
environmental consulting ◆ landscape architecture
www.allenmajor.com
100 COMMERCE WAY
P.O. BOX 2118
WOBURN MA 01888-0118
TEL: (781) 935-6889
FAX: (781) 935-2896
WOBURN, MA ◆ LAKEVILLE, MA ◆ MANCHESTER, NH

THIS DRAWING HAS BEEN PREPARED IN ELECTRONIC FORMAT. CLIENT/CLIENTS REPRESENTATIVE OR CONSULTANT MAY BE PROVIDED COPIES OF DRAWINGS AND SPECIFICATIONS ON MAGNETIC MEDIA FOR HIS/HER INFORMATION AND USE FOR SPECIFIC APPLICATION TO THIS PROJECT. DUE TO THE POTENTIAL THAT THE MAGNETIC INFORMATION MAY BE MODIFIED UNINTENTIONALLY OR OTHERWISE, ALLEN & MAJOR ASSOCIATES, INC. MAY REMOVE ALL INDICATION OF THE DOCUMENT'S AUTHORSHIP ON THE MAGNETIC MEDIA. PRINTED REPRESENTATIONS OF THE DRAWINGS AND SPECIFICATIONS ISSUED SHALL BE THE ONLY RECORD COPIES OF ALLEN & MAJOR ASSOCIATES, INC.'S WORK PRODUCT.

DRAWING TITLE:	SHEET No.
GRADING & DRAINAGE PLAN	C-2B

Copyright©2015 Allen & Major Associates, Inc. All Rights Reserved

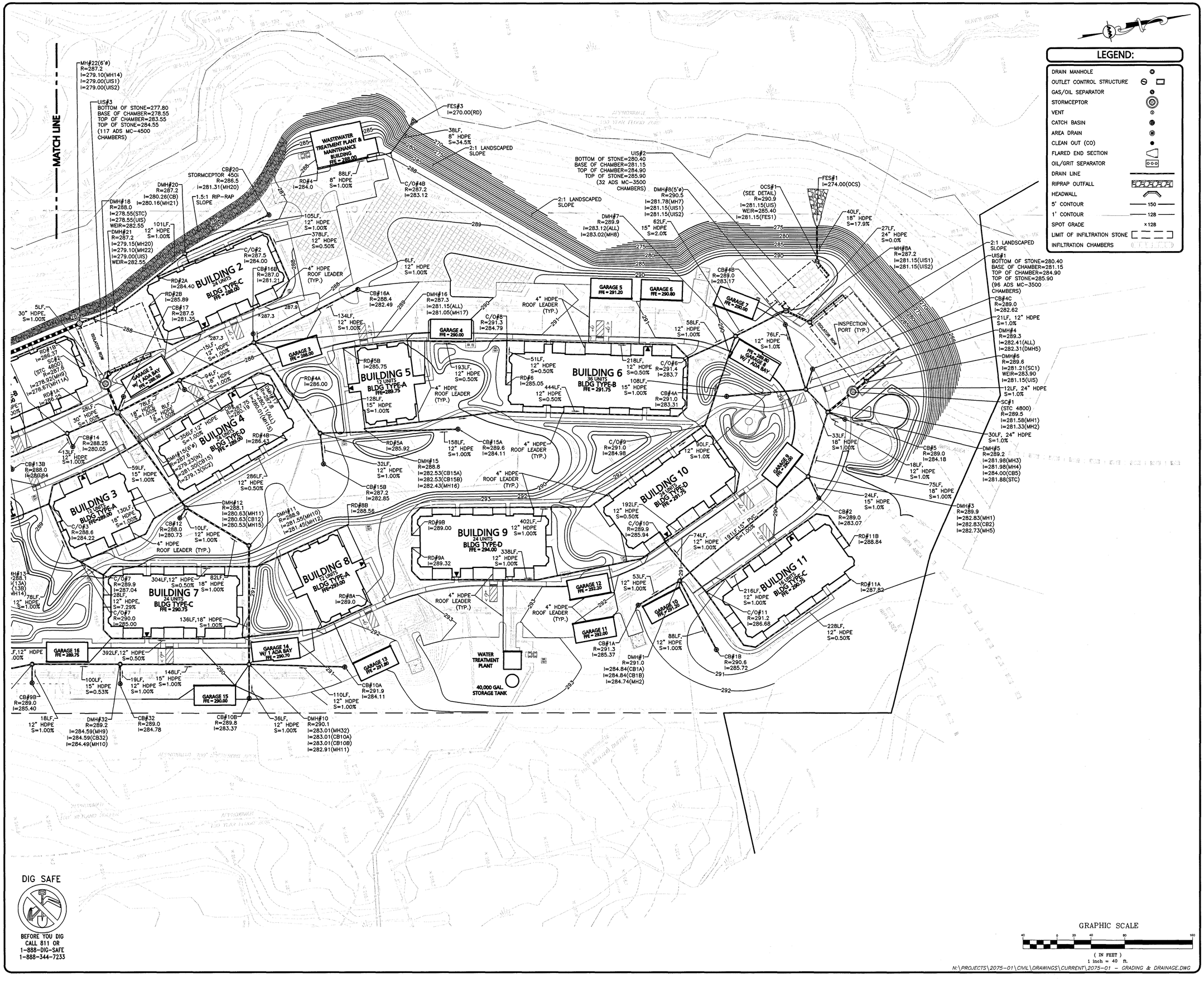

WAIVERS OF TOWN OF BOXBOROUGH ZONING BYLAWS:
4.4033(1) USE REGULATION SCHEDULE
WAIVER TO PERMIT SINGLE-FAMILY AND MULTI-FAMILY ATTACHED RESIDENTIAL USES NOT OTHERWISE PERMITTED IN THE INDUSTRIAL COMMERCIAL DISTRICT (I.E. THE PROPOSED TWO (2) SINGLE FAMILY DWELLINGS AND THE PROPOSED 244 APARTMENT UNITS IN ELEVEN (11) MULTI-FAMILY BUILDINGS, FOR A TOTAL OF 246 UNITS)
4.4033 USE REGULATION SCHEDULE
WAIVER TO PERMIT A USE WHICH IS NOT OTHERWISE ACCESSORY TO INDUSTRIAL-COMMERCIAL USES, I.E., A CLUBHOUSE/RENTAL OFFICE.
5.5002 DIMENSIONAL SCHEDULE
WAIVER OF REQUIREMENT FOR A MAXIMUM FLOOR AREA RATIO OF 0.10.
5.6004 SURFACE, CIRCULATION, AND LANDSCAPING REQUIREMENTS
WAIVER OF REQUIREMENT THAT AUTOMOBILE PARKING SPACES SHALL NOT BE LESS THAN 10 FEET BY 20 FEET, IN ORDER TO ALLOW PARKING SPACE OF 9 FEET BY 18 FEET.
5.6103 MULTIPLE BUILDINGS ON ONE LOT
WAIVER OF REQUIREMENT THAT WHERE MORE THAN ONE BUILDING IS PROPOSED TO BE BUILT UPON A LOT, THE PLAN SHALL BE REVIEWED BY THE PLANNING BOARD REGARDING ADEQUACY OF ACCESS TO BUILDINGS, IN ORDER TO SUBSTITUTE THE PERMISSION FROM THE ZONING BOARD OF APPEALS GRANTED UNDER THIS COMPREHENSIVE PERMIT.
5.6106 PRIVATE/COMMON DRIVEWAYS IN THE BUSINESS, BUSINESS 1, OFFICE PARK, TOWN CENTER, AND INDUSTRIAL-COMMERCIAL DISTRICTS
WAIVER OF THE REQUIREMENT THAT PRIVATE/COMMON DRIVEWAYS ARE ALLOWED IN THE I-C DISTRICT ONLY BY SPECIAL PERMIT OF THE PLANNING BOARD, IN ORDER TO SUBSTITUTE THE PERMISSION FROM THE ZONING BOARD OF APPEALS UNDER THIS COMPREHENSIVE PERMIT.
7.7004(G) SPECIAL REGULATIONS AQUIFER PROTECTION DISTRICT
WAIVER OF REQUIRMENT THAT THERE BE NO DISPOSAL OF SANITARY WASTE TO A SUBSURFACE DISPOSAL SYSTEM IN QUANTITIES EXCEEDING 440 GALLONS PER DAY PER ACRE OF AQUIFER PROTECTION DISTRICT CONTAINED WITHIN THE LOT, IN ORDER TO ALLOW QUANTITIES OF UP TO 1750 GALLONS PER DAY PER ACRE OF THE SITE IN THE AQUIFER PROTECTION DISTRICT IN THE EVENT RESERVE LEACHING FIELDS ARE USED.
7.7007(1) DESIGN REQUIREMENTS
WAIVER OF REQUIREMENT THAT WHERE A PORTION OF THE SITE IS LOCATED OUTSIDE OF THE AQUIFER PROTECTION DISTRICT, POTENTIAL POLLUTION SOURCES, SUCH AS SITE DISPOSAL SYSTEMS, SHOULD BE LOCATED OUTSIDE THE DISTRICT BOUNDARIES; IN ORDER TO ALLOW RESERVE LEACHING FIELD TO BE LOCATED WITHIN THE AQUIFER PROTECTION DISTRICT.
7.7104(J) AND (N) W-DISTRICT USE REGULATIONS
WAIVER OF REQUIREMENTS FOR SPECIAL PERMIT FOR USE IN THE W-DISTRICT, IN ORDER TO SUBSTITUTE APPROVAL UNDER THIS COMPREHENSIVE PERMIT.
7.7106 SUBMITALS
WAIVER OF REQUIREMENTS FOR SPECIAL PERMIT APPLICATIONS TO BE PREPARED AND SUBMITTED TO THE BOARD OF APPEALS, IN ORDER TO PERMIT ONE COMPREHENSIVE SUBMISSION TO THE BOARD TO BE ACTED ON UNDER G.L. C. 40B, §21.
7.7109 PROCEDURES
WAIVER OF REQUIREMENT FOR SPECIAL PERMIT APPLICATIONS TO BE PREPARED AND SUBMITTED TO THE BOARD OF APPEALS IN ORDER TO PERMIT A SINGLE COMPREHENSIVE PERMIT SUBMISSION TO THE BOARD TO BE ACTED UPON UNDER G.L. C.40B, §21.
7.7120 LAND BORDERING THE W-DISTRICT
WAIVER OF REQUIREMENT FOR SPECIAL PERMIT TO PLACE STRUCTURES WITHIN ONE HUNDRED (100') FEET OF THE W-DISTRICT, IN ORDER TO PERMIT CONSTRUCTION OF WARD ROAD AT THE POINT WITHIN 100' OF W-DISTRICT.
8.8000 SITE PLAN APPROVAL & DESIGN REVIEW
WAIVER OF REQUIREMENT FOR SITE PLAN REVIEW BY THE PLANNING BOARD FOR THE CONSTRUCTION OF MULTI-FAMILY STRUCTURES AND PARKING AREAS ASSOCIATED WITH MULTI-FAMILY STRUCTURES.
9.9001(2) BUILDING PERMITS
WAIVER OF REQUIREMENT THAT NO BUILDING PERMIT SHALL BE ISSUED BY THE INSPECTOR OF BUILDINGS WITHOUT THE WRITTEN APPROVAL OF A SITE PLAN BY THE PLANNING BOARD.

WAIVERS FROM TOWN OF BOXBOROUGH REGULATIONS FOR THE WETLAND BYLAW:
SECTION 2.5.3.1 PERFORMANCE STANDARDS
WAIVER OF PROHIBITION OF PARKING LOTS, PERMANENT STRUCTURES, AND SANITARY WASTE DISPOSAL SYSTEMS WITHIN ADJACENT LAND RESOURCE AREA, IN ORDER TO ALLOW THE PLACEMENT OF THE PROPOSED SANITARY WASTE DISPOSAL SYSTEM, PARKING LOT, ROAD AND OTHER PERMANENT STRUCTURES WITHIN THE ADJACENT LAND RESOURCE AREA IN ACCORDANCE WITH THE SITE PLAN APPROVED FOR THE PROJECT UNDER THIS COMPREHENSIVE PERMIT.

WAIVERS FROM BOXBOROUGH COMPREHENSIVE PERMIT RULES OF THE ZONING BOARD OF APPEALS:
SECTION 3.0 (B) LIST OF REQUESTED EXCEPTIONS
WAIVER OF REQUIREMENT THAT APPLICANT PROVIDES A COMPLETE LIST OF ALL REQUESTED EXCEPTIONS AS OF THE TIME OF THE INITIAL FILING OF THE APPLICATION IN ORDER TO PERMIT THE LIST TO BE REVISED AS THE PROJECT EVOLVES THROUGH THE HEARING AND APPROVAL PROCESS.

COMMONWEALTH OF MASSACHUSETTS TIMOTHY J. WILLIAMS CIVIL No. 43119 REGISTERED PROFESSIONAL ENGINEER
PROFESSIONAL ENGINEER FOR ALLEN & MAJOR ASSOCIATES, INC.

REV	DATE	DESCRIPTION
9.	07/08/2015	ISSUED FOR DEFINITIVE SITE PLAN
8.	06/12/2015	REVISED PER FIRE DEPARTMENT COMMENTS
7.	05/15/2015	ISSUED FOR PERMIT
6.	05/05/2015	ISSUED FOR DEP PERMIT APPROVAL
5.	05/04/2015	REVISED FOR PRICING
4.	03/26/2015	REVISED PER TOWN COMMENTS
3.	03/02/2015	ISSUED FOR MEPA
2.	02/27/2015	REVISED PER TOWN COMMENTS
1.	02/12/2015	ISSUED FOR ZONING BOARD OF APPEALS

APPLICANT:
JPI
3 WEST MAIN STREET, SUITE 203
IRVINGTON, NY 10533

PROJECT:
DEFINITIVE SITE PLAN SET
JEFFERSON AT BEAVER BROOK
BOXBOROUGH, MA

PROJECT NO.	2075-01	DATE:	02-11-2015
SCALE:	1"=40'	DWG. NAME:	C2075-10
DESIGNED BY:	SJL	CHECKED BY:	CMQ

PREPARED BY:

ALLEN & MAJOR ASSOCIATES, INC.
civil & structural engineering ◆ land surveying
environmental consulting◆ landscape architecture
www.allenmajor.com
100 COMMERCE WAY
P.O. BOX 2118
WOBURN MA 01888-0118
TEL: (781) 935-6889
FAX: (781) 935-2896
WOBURN, MA ◆ LAKEVILLE, MA ◆ MANCHESTER, NH

THIS DRAWING HAS BEEN PREPARED IN ELECTRONIC FORMAT. CLIENT/CLIENT'S REPRESENTATIVE OR CONSULTANT MAY BE PROVIDED COPIES OF DRAWINGS AND SPECIFICATIONS ON MAGNETIC MEDIA FOR HIS/HER INFORMATION AND USE FOR SPECIFIC APPLICATION TO THIS PROJECT. DUE TO THE POTENTIAL THAT THE MAGNETIC INFORMATION MAY BE MODIFIED UNINTENTIONALLY OR OTHERWISE, ALLEN & MAJOR ASSOCIATES, INC. MAY REMOVE ALL INDICATION OF THE DOCUMENT'S AUTHORSHIP ON THE MAGNETIC MEDIA. PRINTED REPRESENTATIONS OF THE DRAWINGS AND SPECIFICATIONS ISSUED SHALL BE THE ONLY RECORD COPIES OF ALLEN & MAJOR ASSOCIATES, INC.'S WORK PRODUCT.

DRAWING TITLE:
GRADING & DRAINAGE PLAN

SHEET No.
C-2C

Copyright©2015 Allen & Major Associates, Inc. All Rights Reserved

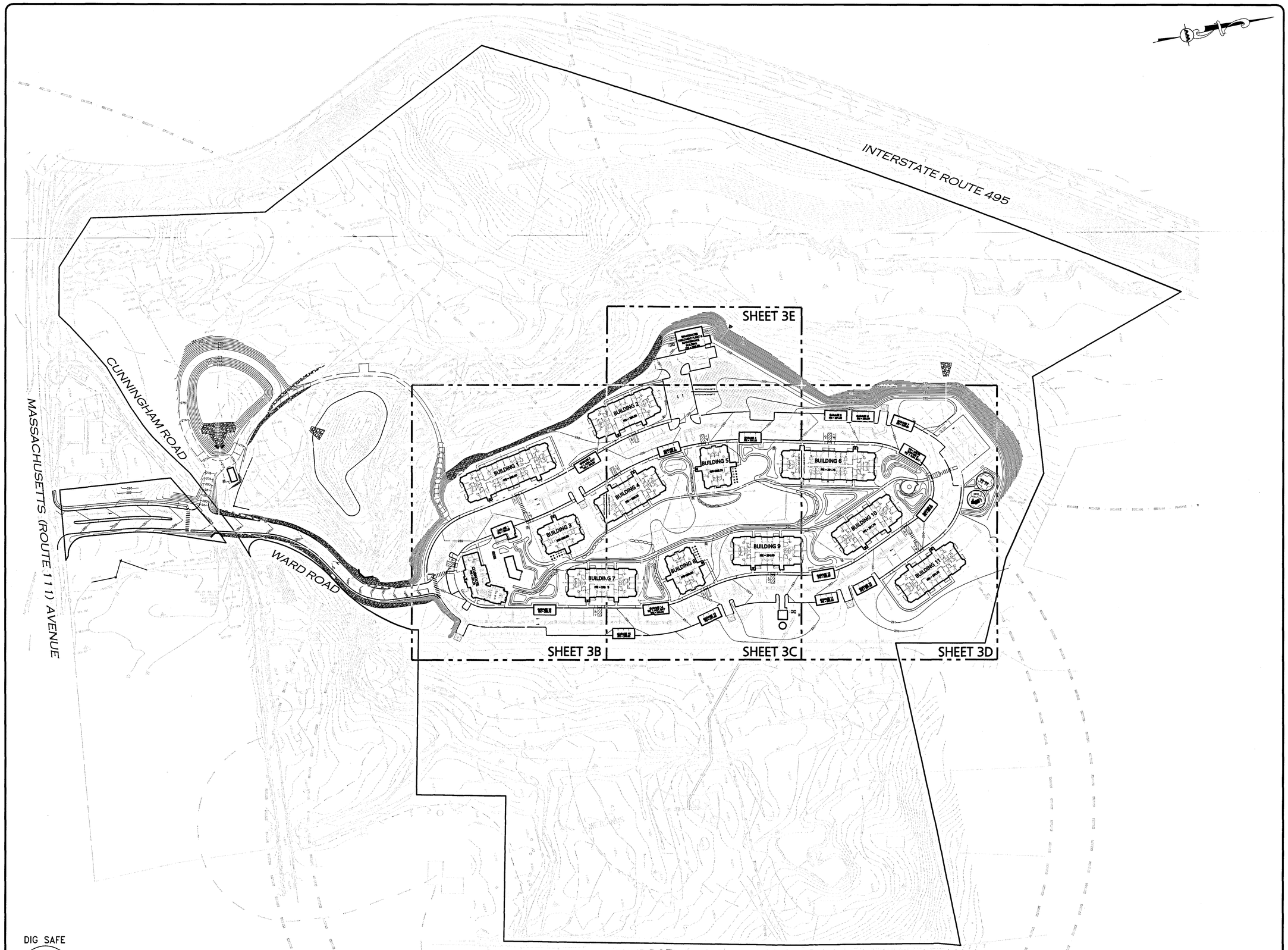

DIG SAFE

BEFORE YOU DIG
CALL 811 OR
1-888-DIG-SAFE
1-888-344-7233

N:\PROJECTS\2075-01\CIVIL\DRAWINGS\CURRENT\2075-01 - SPOT GRADES.DWG

JPI

WAIVERS OF TOWN OF BOXBOROUGH ZONING BYLAWS:

4.4003(1) USE REGULATION SCHEDULE
WAIVER TO PERMIT SINGLE-FAMILY AND MULTI-FAMILY ATTACHED RESIDENTIAL USES NOT OTHERWISE PERMITTED IN THE INDUSTRIAL COMMERCIAL DISTRICT (I.E. THE PROPOSED TWO (2) SINGLE FAMILY DWELLINGS AND THE PROPOSED 244 APARTMENT UNITS IN ELEVEN (11) MULTI-FAMILY BUILDINGS, FOR A TOTAL OF 246 UNITS)

4.4033 USE REGULATION SCHEDULE
WAIVER TO PERMIT A USE WHICH IS NOT OTHERWISE ACCESSORY TO INDUSTRIAL-COMMERCIAL USES, I.E., A CLUBHOUSE/RENTAL OFFICE.

5.5002 DIMENSIONAL SCHEDULE
WAIVER OF REQUIREMENT FOR A MAXIMUM FLOOR AREA RATIO OF 0.10.

6.6004 SURFACE, CIRCULATION, AND LANDSCAPING REQUIREMENTS
WAIVER OF REQUIREMENT THAT AUTOMOBILE PARKING SPACES SHALL NOT BE LESS THAN 10 FEET BY 20 FEET, IN ORDER TO ALLOW PARKING SPACE OF 9 FEET BY 18 FEET.

6.6103 MULTIPLE BUILDINGS ON ONE LOT
WAIVER OF REQUIREMENT THAT WHERE MORE THAN ONE BUILDING IS PROPOSED TO BE BUILT UPON A LOT, THE PLAN SHALL BE REVIEWED BY THE PLANNING BOARD REGARDING ADEQUACY OF ACCESS TO BUILDINGS, IN ORDER TO SUBSTITUTE THE PERMISSION FROM THE ZONING BOARD OF APPEALS GRANTED UNDER THIS COMPREHENSIVE PERMIT.

6.6106 PRIVATE/COMMON DRIVEWAYS IN THE BUSINESS, BUSINESS 1, OFFICE PARK, TOWN CENTER, AND INDUSTRIAL-COMMERCIAL DISTRICTS
WAIVER OF THE REQUIREMENT THAT PRIVATE/COMMON DRIVEWAYS ARE ALLOWED IN THE IC DISTRICT ONLY BY SPECIAL PERMIT OF THE PLANNING BOARD, IN ORDER TO SUBSTITUTE THE PERMISSION FROM THE ZONING BOARD OF APPEALS UNDER THIS COMPREHENSIVE PERMIT.

7.7004(6) SPECIAL REGULATIONS AQUIFER PROTECTION DISTRICT
WAIVER OF REQUIREMENT THAT THERE BE NO DISPOSAL OF SANITARY WASTE TO BE DISPOSED OF ON SITE IN QUANTITIES EXCEEDING 440 GALLONS PER DAY PER ACRE OF AQUIFER PROTECTION DISTRICT CONTAINED WITHIN THE LOT, IN ORDER TO ALLOW QUANTITIES OF UP TO 750 GALLONS PER DAY PER ACRE OF THE SITE IN THE AQUIFER PROTECTION DISTRICT IN THE EVENT RESERVE LEACHING FIELDS ARE USED.

7.7007(1) DESIGN REQUIREMENTS
WAIVER OF REQUIREMENT THAT WHERE A PORTION OF THE SITE IS LOCATED OUTSIDE OF THE AQUIFER PROTECTION DISTRICT, POTENTIAL POLLUTION SOURCES, SUCH AS ON SITE DISPOSAL SYSTEMS, SHOULD BE LOCATED OUTSIDE THE DISTRICT BOUNDARIES, IN ORDER TO ALLOW RESERVE LEACHING FIELD TO BE LOCATED WITHIN THE AQUIFER PROTECTION DISTRICT.

7.7104(6) AND (9) W-DISTRICT USE REGULATIONS
WAIVER OF REQUIREMENTS FOR SPECIAL PERMIT FOR USE IN THE W-DISTRICT IN ORDER TO SUBSTITUTE APPROVAL UNDER THIS COMPREHENSIVE PERMIT.

7.7106 SUBMITTALS
WAIVER OF REQUIREMENTS FOR SPECIAL PERMIT APPLICATIONS TO BE PREPARED AND SUBMITTED TO THE BOARD OF APPEALS, IN ORDER TO PERMIT ONE COMPREHENSIVE SUBMISSION TO THE BOARD TO BE ACTED ON UNDER G.L. c. 40B, §21.

7.7109 PROCEDURES
WAIVER OF REQUIREMENT FOR SPECIAL PERMIT APPLICATIONS TO BE PREPARED AND SUBMITTED TO THE BOARD OF APPEALS IN ORDER TO PERMIT A SINGLE COMPREHENSIVE PERMIT SUBMISSION TO THE BOARD TO BE ACTED UPON UNDER G.L. C.40B, §21

7.7200 LANDS BORDERING THE W-DISTRICT
WAIVER OF REQUIREMENT FOR SPECIAL PERMIT TO PLACE STRUCTURES WITHIN ONE HUNDRED (100') FEET OF THE W-DISTRICT, IN ORDER TO PERMIT CONSTRUCTION OF WARD ROAD AND A FIRE POND WITHIN 100' OF W-DISTRICT.

8.8000 SITE PLAN APPROVAL & DESIGN REVIEW
WAIVER OF REQUIREMENT FOR SITE PLAN REVIEW BY THE PLANNING BOARD FOR THE CONSTRUCTION OF MULTI-FAMILY STRUCTURES AND PARKING AREAS ASSOCIATED WITH MULTI-FAMILY STRUCTURES.

9.9001(2) BUILDING PERMITS
WAIVER OF REQUIREMENT THAT NO BUILDING PERMIT SHALL BE ISSUED BY THE INSPECTOR OF BUILDINGS WITHOUT THE WRITTEN APPROVAL OF A SITE PLAN BY THE PLANNING BOARD.

WAIVERS FROM TOWN OF BOXBOROUGH REGULATIONS FOR THE WETLAND BYLAW:

SECTION 2.5.3.1 PERFORMANCE STANDARDS
WAIVER OF PROHIBITION OF PARKING LOTS, PERMANENT STRUCTURES, AND SANITARY WASTE DISPOSAL SYSTEMS WITHIN ADJACENT LAND RESOURCE AREA, IN ORDER TO ALLOW THE PLACEMENT OF THE PROPOSED SANITARY WASTE DISPOSAL SYSTEM, PARKING LOT, ROAD AND OTHER PERMANENT STRUCTURES WITHIN THE ADJACENT LAND RESOURCE AREA IN ACCORDANCE WITH THE SITE PLAN APPROVED FOR THE PROJECT UNDER THIS COMPREHENSIVE PERMIT.

WAIVERS FROM BOXBOROUGH COMPREHENSIVE PERMIT RULES OF THE ZONING BOARD OF APPEALS:

SECTION 3.02(D) LIST OF REQUESTED EXCEPTIONS
WAIVER OF REQUIREMENT THAT APPLICANT PROVIDES A COMPLETE LIST OF ALL REQUESTED EXCEPTIONS AT THE TIME OF THE INITIAL FILING OF THE APPLICATION IN ORDER TO PERMIT THE LIST TO BE REVISED AS THE PROJECT EVOLVES THROUGH THE HEARING AND APPROVAL PROCESS.

COMMONWEALTH OF MASSACHUSETTS
STEVEN J. WILLIAMS
CIVIL
No. 43119
REGISTERED PROFESSIONAL ENGINEER

PROFESSIONAL ENGINEER FOR
ALLEN & MAJOR ASSOCIATES, INC.

REV	DATE	DESCRIPTION
9.	07/08/2015	ISSUED FOR DEFINITIVE SITE PLAN
8.	06/12/2015	REVISED PER FIRE DEPARTMENT COMMENTS
7.	05/15/2015	ISSUED FOR PERMIT
6.	05/05/2015	ISSUED FOR DEP PERMIT APPROVAL
5.	05/04/2015	REVISED FOR PRICING
4.	03/26/2015	REVISED PER TOWN COMMENTS
3.	03/02/2015	ISSUED FOR MEPA
2.	02/27/2015	REVISED PER TOWN COMMENTS
1.	02/12/2015	ISSUED FOR ZONING BOARD OF APPEALS

APPLICANT:

JPI
3 WEST MAIN STREET, SUITE 203
IRVINGTON, NY 10533

PROJECT:

DEFINITIVE SITE PLAN SET
JEFFERSON AT BEAVER BROOK
BOXBOROUGH, MA

PROJECT NO.	2075-01	DATE:	02-11-2015
SCALE:	1"=80'	DWG. NAME:	C2075-10
DESIGNED BY:	SJL	CHECKED BY:	CMQ

PREPARED BY:

ALLEN & MAJOR ASSOCIATES, INC.
civil & structural engineering ◆ land surveying
environmental consulting ◆ landscape architecture
www.allenmajor.com
100 COMMERCE WAY
P.O. BOX 2118
WOBURN MA 01888-0118
TEL: (781) 935-6889
FAX: (781) 935-2896
WOBURN, MA ◆ LAKEVILLE, MA ◆ MANCHESTER, NH

THIS DRAWING HAS BEEN PREPARED IN ELECTRONIC FORMAT. CLIENT/CLIENT'S REPRESENTATIVE OR CONSULTANT MAY BE PROVIDED COPIES OF DRAWINGS AND SPECIFICATIONS ON MAGNETIC MEDIA FOR HIS/HER INFORMATION AND USE FOR SPECIFIC APPLICATION TO THIS PROJECT. DUE TO THE POTENTIAL THAT THE MAGNETIC INFORMATION MAY BE MODIFIED UNINTENTIONALLY OR OTHERWISE, ALLEN & MAJOR ASSOCIATES, INC. MAY REMOVE ALL INDICATION OF THE DOCUMENT'S AUTHORSHIP ON THE MAGNETIC MEDIA. PRINTED REPRESENTATIONS OF THE DRAWINGS AND SPECIFICATIONS ISSUED SHALL BE THE ONLY RECORD COPIES OF ALLEN & MAJOR ASSOCIATES, INC.'S WORK PRODUCT.

DRAWING TITLE:	SHEET No.
SPOT GRADE PLAN	C-3A

Copyright©2015 Allen & Major Associates, Inc. All Rights Reserved

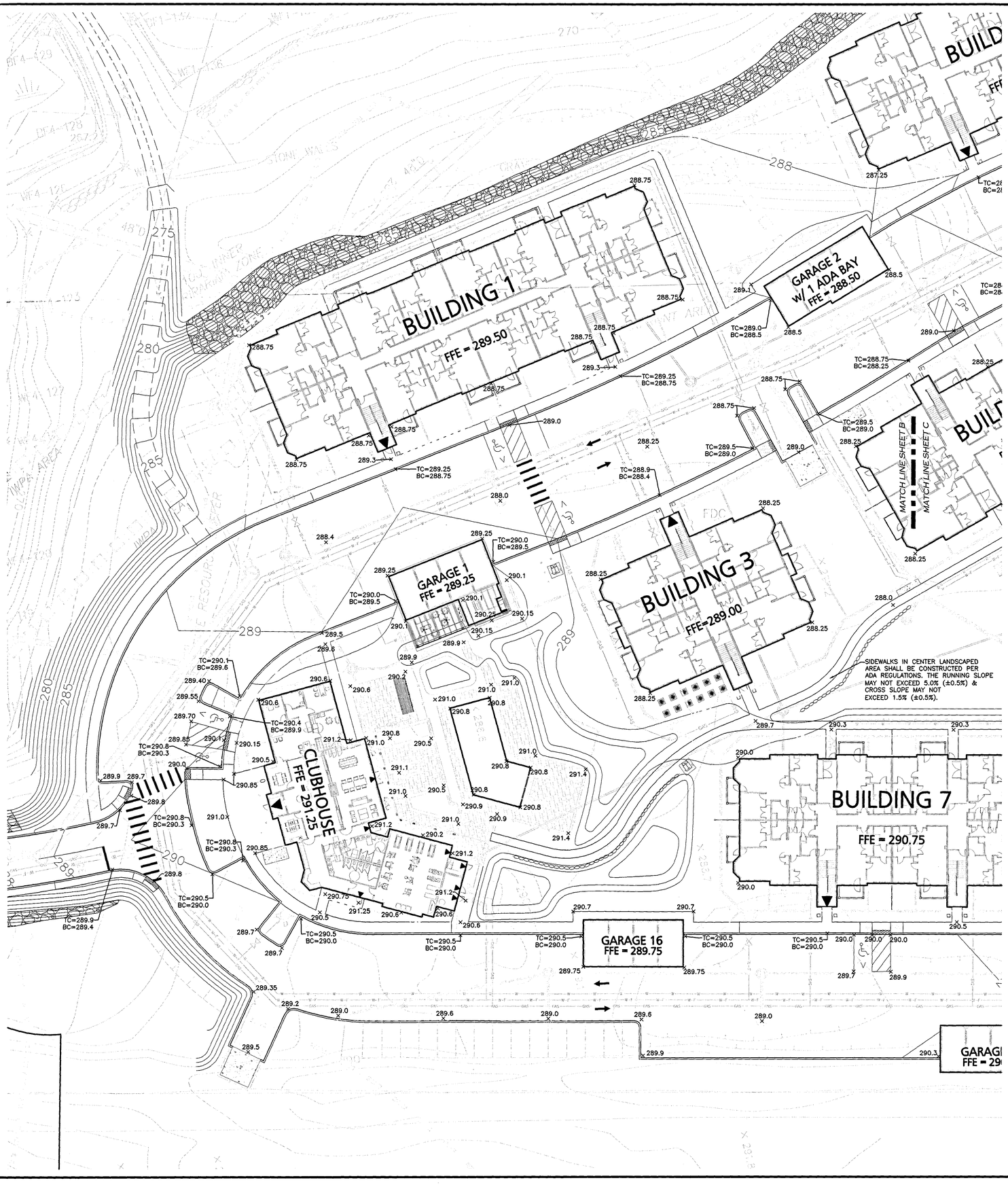

LEGEND:

1' CONTOUR	128
5' CONTOUR	128
SPOT GRADE	×128

DIG SAFE

BEFORE YOU DIG
CALL 811 OR
1-888-DIG-SAFE
1-888-344-7233

GRAPHIC SCALE

20 0 10 20 40 80

(IN FEET)
1 inch = 20 ft.

N:\PROJECTS\2075-01\CIVIL\DRAWINGS\CURRENT\2075-01 - SPOT GRADES.DWG

JPI

WAIVERS OF TOWN OF BOXBOROUGH ZONING BYLAWS:
4.4033(1) USE REGULATION SCHEDULE
WAIVER TO PERMIT SINGLE-FAMILY AND MULTI-FAMILY ATTACHED RESIDENTIAL USES, NOT OTHERWISE PERMITTED IN THE INDUSTRIAL/COMMERCIAL DISTRICT (I.E. THE PROPOSED TWO (2) SINGLE FAMILY DWELLINGS AND THE PROPOSED 244 APARTMENT UNITS IN ELEVEN (11) MULTI-FAMILY BUILDINGS, FOR A TOTAL OF 246 UNITS)
4.4033 USE REGULATION SCHEDULE
WAIVER TO PERMIT A USE WHICH IS NOT OTHERWISE ACCESSORY TO INDUSTRIAL-COMMERCIAL USES, I.E., A CLUBHOUSE/RENTAL OFFICE.
5.5002 DIMENSIONAL SCHEDULE
WAIVER OF REQUIREMENT FOR A MAXIMUM FLOOR AREA RATIO OF 0.10.
6.6004 SURFACE, CIRCULATION, AND LANDSCAPING REQUIREMENTS
WAIVER OF REQUIREMENT THAT AUTOMOBILE PARKING SPACES SHALL NOT BE LESS THAN 10 FEET BY 20 FEET, IN ORDER TO ALLOW PARKING SPACE OF 9 FEET BY 18 FEET.
6.6103 MULTIPLE BUILDINGS ON ONE LOT
WAIVER OF REQUIREMENT THAT WHERE MORE THAN ONE BUILDING IS PROPOSED TO BE BUILT UPON A LOT THE PLAN SHALL BE REVIEWED BY THE PLANNING BOARD REGARDING ADEQUACY OF ACCESS TO BUILDINGS, IN ORDER TO SUBSTITUTE THE PERMISSION FROM THE ZONING BOARD OF APPEALS GRANTED UNDER THIS COMPREHENSIVE PERMIT.
6.6106 PRIVATE/COMMON DRIVEWAYS IN THE BUSINESS, BUSINESS 1, OFFICE PARK, TOWN CENTER, AND INDUSTRIAL-COMMERCIAL DISTRICTS
WAIVER OF THE REQUIREMENT THAT PRIVATE/COMMON DRIVEWAYS ARE ALLOWED IN THE IC DISTRICT ONLY BY SPECIAL PERMIT OF THE PLANNING BOARD, IN ORDER TO SUBSTITUTE THE PERMISSION FROM THE ZONING BOARD OF APPEALS UNDER THIS COMPREHENSIVE PERMIT.
7.7004(G) SPECIAL REGULATIONS AQUIFER PROTECTION DISTRICT
WAIVER OF REQUIREMENT THAT THERE BE NO DISPOSAL OF SANITARY WASTE TO A SUBSURFACE DISPOSAL SYSTEM IN QUANTITIES EXCEEDING 440 GALLONS PER DAY PER ACRE OF AQUIFER PROTECTION DISTRICT CONTAINED WITHIN THE LOT, IN ORDER TO ALLOW QUANTITIES OF UP TO 750 GALLONS PER DAY PER ACRE OF THE SITE IN THE AQUIFER PROTECTION DISTRICT IN THE EVENT RESERVE LEACHING FIELDS ARE USED.
7.7007(1) DESIGN REQUIREMENTS
WAIVER OF REQUIREMENT THAT WHERE A PORTION OF THE SITE IS LOCATED OUTSIDE OF THE AQUIFER PROTECTION DISTRICT, POTENTIAL POLLUTION SOURCES, SUCH AS ON SITE DISPOSAL SYSTEMS, SHOULD BE LOCATED OUTSIDE THE DISTRICT BOUNDARIES, IN ORDER TO ALLOW RESERVE LEACHING FIELD TO BE LOCATED WITHIN THE AQUIFER PROTECTION DISTRICT.
7.7104(I) AND (II) W-DISTRICT USE REGULATIONS
WAIVER OF REQUIREMENTS FOR SPECIAL PERMIT FOR USE IN THE W-DISTRICT, IN ORDER TO SUBSTITUTE APPROVAL UNDER THIS COMPREHENSIVE PERMIT.
7.7106 SUBMITTALS
WAIVER OF REQUIREMENTS FOR SPECIAL PERMIT APPLICATIONS TO BE PREPARED AND SUBMITTED TO THE BOARD OF APPEALS, IN ORDER TO PERMIT ONE COMPREHENSIVE SUBMISSION TO THE BOARD TO BE ACTED ON UNDER G.L. C. 40B, §21.
7.7109 PROCEDURES
WAIVER OF REQUIREMENT FOR SPECIAL PERMIT APPLICATIONS TO BE PREPARED AND SUBMITTED TO THE BOARD OF APPEALS IN ORDER TO PERMIT A SINGLE COMPREHENSIVE PERMIT SUBMISSION TO THE BOARD TO BE ACTED UPON UNDER G.L. C.40B, §21.
7.7200 LANDS BORDERING THE W-DISTRICT
WAIVER OF REQUIREMENT FOR SPECIAL PERMIT TO PLACE STRUCTURES WITHIN ONE HUNDRED (100') FEET OF THE W-DISTRICT, IN ORDER TO PERMIT CONSTRUCTION OF WARD ROAD AND A FIRE POND WITHIN 100' OF W-DISTRICT.
8.8000 SITE PLAN APPROVAL & DESIGN REVIEW
WAIVER OF REQUIREMENT FOR SITE PLAN REVIEW BY THE PLANNING BOARD FOR THE CONSTRUCTION OF MULTI-FAMILY STRUCTURES AND PARKING AREAS ASSOCIATED WITH MULTI-FAMILY STRUCTURES.
9.9001(2) BUILDING PERMITS
WAIVER OF REQUIREMENT THAT NO BUILDING PERMIT SHALL BE ISSUED BY THE INSPECTOR OF BUILDINGS WITHOUT THE WRITTEN APPROVAL OF A SITE PLAN BY THE PLANNING BOARD.

WAIVERS FROM TOWN OF BOXBOROUGH REGULATIONS FOR THE WETLAND BYLAW:
SECTION 2.5.3.1 PERFORMANCE STANDARDS
WAIVER OF PROHIBITION OF PARKING LOTS, PERMANENT STRUCTURES, AND SANITARY WASTE DISPOSAL SYSTEMS WITHIN ADJACENT LAND RESOURCE AREA, IN ORDER TO ALLOW THE PLACEMENT OF THE PROPOSED SANITARY WASTE DISPOSAL SYSTEM, PARKING LOT, ROAD AND OTHER PERMANENT STRUCTURES WITHIN THE ADJACENT LAND RESOURCE AREA IN ACCORDANCE WITH THE SITE PLAN APPROVED FOR THE PROJECT UNDER THIS COMPREHENSIVE PERMIT.

WAIVERS FROM BOXBOROUGH COMPREHENSIVE PERMIT RULES OF THE ZONING BOARD OF APPEALS:
SECTION 3.02(1) LIST OF REQUESTED EXCEPTIONS
WAIVER OF REQUIREMENT THAT APPLICANT PROVIDES A COMPLETE LIST OF ALL REQUESTED EXCEPTIONS AT THE TIME OF THE INITIAL FILING OF THE APPLICATION IN ORDER TO PERMIT THE LIST TO BE REVISED AS THE PROJECT EVOLVES THROUGH THE HEARING AND APPROVAL PROCESS.

COMMONWEALTH OF MASSACHUSETTS
TIMOTHY J. WILLIAMS
CIVIL
No. 43119
REGISTERED PROFESSIONAL ENGINEER

PROFESSIONAL ENGINEER FOR
ALLEN & MAJOR ASSOCIATES, INC.

REV	DATE	DESCRIPTION
9.	07/08/2015	ISSUED FOR DEFINITIVE SITE PLAN
8.	06/12/2015	REVISED PER FIRE DEPARTMENT COMMENTS
7.	05/15/2015	ISSUED FOR PERMIT
6.	05/05/2015	ISSUED FOR DEP PERMIT APPROVAL
5.	05/04/2015	REVISED FOR PRICING
4.	03/26/2015	REVISED PER TOWN COMMENTS
3.	03/02/2015	ISSUED FOR MEPA
2.	02/27/2015	REVISED PER TOWN COMMENTS
1.	02/12/2015	ISSUED FOR ZONING BOARD OF APPEALS

APPLICANT:
JPI
3 WEST MAIN STREET, SUITE 203
IRVINGTON, NY 10533

PROJECT:
DEFINITIVE SITE PLAN SET
JEFFERSON AT BEAVER BROOK
BOXBOROUGH, MA

PROJECT NO.	2075-01	DATE:	02-11-2015
SCALE:	1"=20'	DWG. NAME:	C2075-10
DESIGNED BY:	SJL	CHECKED BY:	CMQ

PREPARED BY:

ALLEN & MAJOR ASSOCIATES, INC.
civil & structural engineering ◆ land surveying
environmental consulting ◆ landscape architecture
www.allenmajor.com
100 COMMERCE WAY
P.O. BOX 2118
WOBURN MA 01888-0118
TEL: (781) 935-6889
FAX: (781) 935-2896
WOBURN, MA ◆ LAKEVILLE, MA ◆ MANCHESTER, NH

THIS DRAWING HAS BEEN PREPARED IN ELECTRONIC FORMAT. CLIENT/CLIENT'S REPRESENTATIVE OR CONSULTANT MAY BE PROVIDED COPIES OF DRAWINGS AND SPECIFICATIONS ON MAGNETIC MEDIA FOR HIS/HER INFORMATION AND USE FOR SPECIFIC APPLICATION TO THIS PROJECT. DUE TO THE POTENTIAL THAT THE MAGNETIC INFORMATION MAY BE MODIFIED UNINTENTIONALLY OR OTHERWISE, ALLEN & MAJOR ASSOCIATES, INC. MAY REMOVE ALL INDICATION OF THE DOCUMENT'S AUTHORSHIP ON THE MAGNETIC MEDIA. PRINTED REPRESENTATIONS OF THE DRAWINGS AND SPECIFICATIONS ISSUED SHALL BE THE ONLY RECORD COPIES OF ALLEN & MAJOR ASSOCIATES, INC.'S WORK PRODUCT.

DRAWING TITLE:	SHEET No.
SPOT GRADE PLAN	C-3B

Copyright©2015 Allen & Major Associates, Inc.
All Rights Reserved

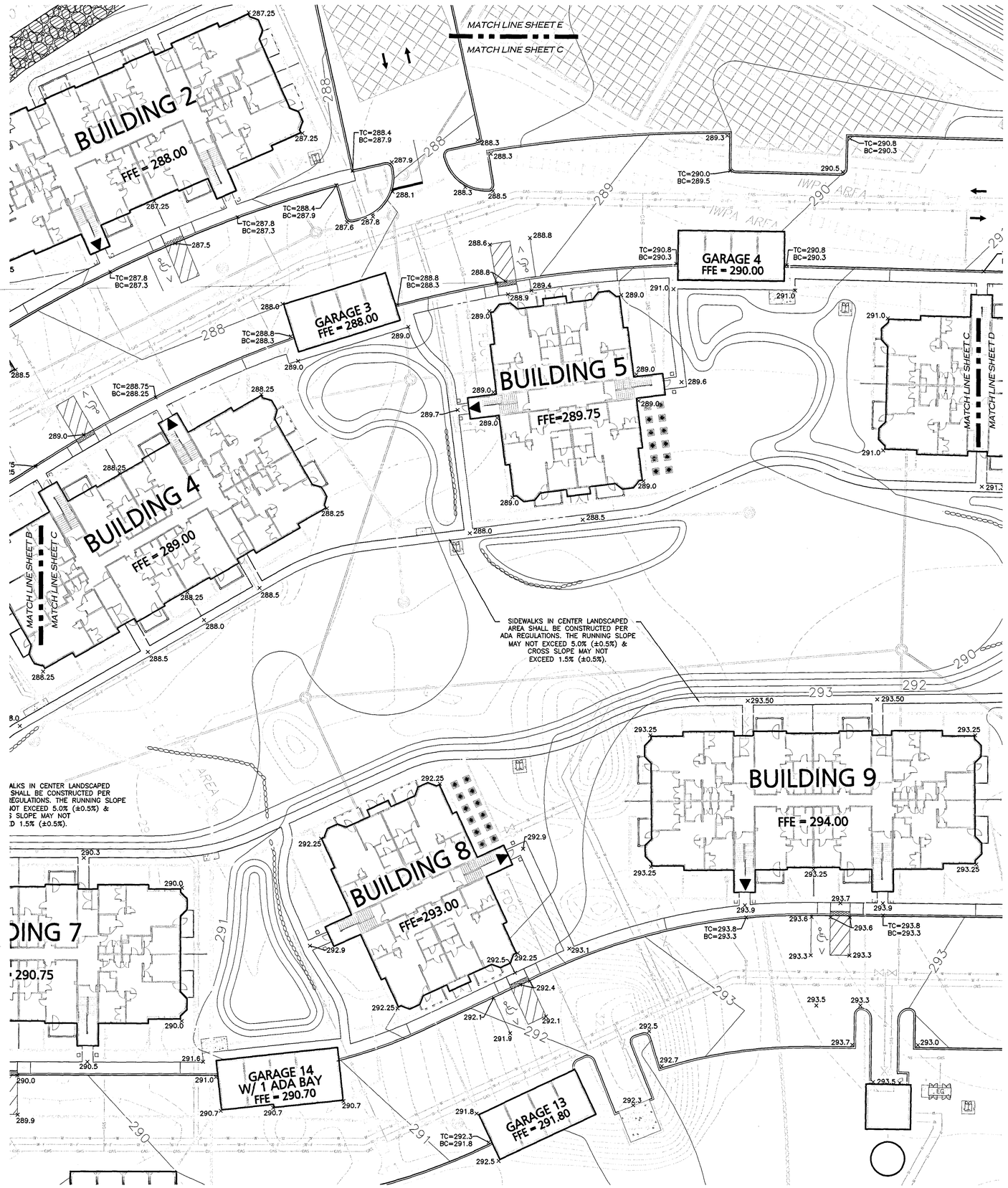

GRAPHIC SCALE

20 0 10 20 40 80

(IN FEET)
1 inch = 20 ft.

N:\PROJECTS\2075-01\CIVIL\DRAWINGS\CURRENT\2075-01 - SPOT GRADES.DWG

DIG SAFE

BEFORE YOU DIG
CALL 811 OR
1-888-DIG-SAFE
1-888-344-7233

LEGEND:

1' CONTOUR	128
5' CONTOUR	128
SPOT GRADE	×128

WAIVERS OF TOWN OF BOXBOROUGH ZONING BYLAWS:
4.4003(1) USE REGULATION SCHEDULE
WAIVER TO PERMIT SINGLE-FAMILY AND MULTI-FAMILY ATTACHED RESIDENTIAL USES NOT OTHERWISE PERMITTED IN THE INDUSTRIAL COMMERCIAL DISTRICT (I.E. THE PROPOSED TWO (2) SINGLE FAMILY DWELLINGS AND THE PROPOSED 244 APARTMENT UNITS IN ELEVEN (11) MULTI-FAMILY BUILDINGS, FOR A TOTAL OF 246 UNITS)
4.4033 USE REGULATION SCHEDULE
WAIVER TO PERMIT A USE WHICH IS NOT OTHERWISE ACCESSORY TO INDUSTRIAL-COMMERCIAL USES, I.E., A CLUBHOUSE/RENTAL OFFICE.
5.5002 DIMENSIONAL SCHEDULE
WAIVER OF REQUIREMENT FOR A MAXIMUM FLOOR AREA RATIO OF 0.10.
6.6004 SURFACE, CIRCULATION, AND LANDSCAPING REQUIREMENTS
WAIVER OF REQUIREMENT THAT AUTOMOBILE PARKING SPACES SHALL NOT BE LESS THAN 10 FEET BY 20 FEET, IN ORDER TO ALLOW PARKING SPACE OF 9 FEET BY 18 FEET.
6.6103 MULTIPLE BUILDINGS ON ONE LOT
WAIVER OF REQUIREMENT THAT WHERE MORE THAN ONE BUILDING IS PROPOSED TO BE BUILT UPON A LOT, THE PLAN SHALL BE REVIEWED BY THE PLANNING BOARD REGARDING ADEQUACY OF ACCESS TO BUILDINGS, IN ORDER TO SUBSTITUTE THE PERMISSION FROM THE ZONING BOARD OF APPEALS GRANTED UNDER THIS COMPREHENSIVE PERMIT.
6.6105 PRIVATE/COMMON DRIVEWAYS IN THE BUSINESS, BUSINESS 1, OFFICE PARK, TOWN CENTER, AND INDUSTRIAL-COMMERCIAL DISTRICTS
WAIVER OF THE REQUIREMENT THAT PRIVATE/COMMON DRIVEWAYS ARE ALLOWED IN THE IC DISTRICT ONLY BY SPECIAL PERMIT OF THE PLANNING BOARD, IN ORDER TO SUBSTITUTE THE PERMISSION FROM THE ZONING BOARD OF APPEALS UNDER THIS COMPREHENSIVE PERMIT.
7.7004(G) SPECIAL REGULATIONS AQUIFER PROTECTION DISTRICT
WAIVER OF REQUIREMENT THAT THERE BE NO DISPOSAL OF SANITARY WASTE TO A SUBSURFACE DISPOSAL SYSTEM IN QUANTITIES EXCEEDING 440 GALLONS PER DAY PER ACRE OF AQUIFER PROTECTION DISTRICT CONTAINED WITHIN THE LOT, IN ORDER TO ALLOW QUANTITIES OF UP TO 750 GALLONS PER DAY PER ACRE OF THE SITE IN THE AQUIFER PROTECTION DISTRICT IN THE EVENT RESERVE LEACHING FIELDS ARE USED.
7.7007(1) DESIGN REQUIREMENTS
WAIVER OF REQUIREMENT THAT WHERE A PORTION OF THE SITE IS LOCATED OUTSIDE OF THE AQUIFER PROTECTION DISTRICT, POTENTIAL POLLUTION SOURCES, SUCH AS ON SITE DISPOSAL SYSTEMS, SHOULD BE LOCATED OUTSIDE THE DISTRICT BOUNDARIES, IN ORDER TO ALLOW RESERVE LEACHING FIELD TO BE LOCATED WITHIN THE AQUIFER PROTECTION DISTRICT.
7.7104(G) AND (N) W-DISTRICT USE REGULATIONS
WAIVER OF REQUIREMENTS FOR SPECIAL PERMIT FOR USE IN THE W-DISTRICT, IN ORDER TO SUBSTITUTE APPROVAL UNDER THIS COMPREHENSIVE PERMIT.
7.7106 SUBMITTALS
WAIVER OF REQUIREMENTS FOR SPECIAL PERMIT APPLICATIONS TO BE PREPARED AND SUBMITTED TO THE BOARD OF APPEALS, IN ORDER TO PERMIT ONE COMPREHENSIVE SUBMISSION TO THE BOARD TO BE ACTED ON UNDER G.L. C. 40B, §21.
7.7109 PROCEDURES
WAIVER OF REQUIREMENT FOR SPECIAL PERMIT APPLICATIONS TO BE PREPARED AND SUBMITTED TO THE BOARD OF APPEALS IN ORDER TO PERMIT A SINGLE COMPREHENSIVE PERMIT SUBMISSION TO THE BOARD TO BE ACTED UPON UNDER G.L. C.40B, §21.
7.7200 LANDS BORDERING THE W-DISTRICT
WAIVER OF REQUIREMENT FOR SPECIAL PERMIT TO PLACE STRUCTURES WITHIN ONE HUNDRED (100') FEET OF THE W-DISTRICT, IN ORDER TO PERMIT CONSTRUCTION OF WARD ROAD AND A FIRE POND WITHIN 100' OF W-DISTRICT.
8.8000 SITE PLAN APPROVAL & DESIGN REVIEW
WAIVER OF REQUIREMENT FOR SITE PLAN REVIEW BY THE PLANNING BOARD FOR THE CONSTRUCTION OF MULTI-FAMILY STRUCTURES AND PARKING AREAS ASSOCIATED WITH MULTI-FAMILY STRUCTURES.
9.9001(2) BUILDING PERMITS
WAIVER OF REQUIREMENT THAT NO BUILDING PERMIT SHALL BE ISSUED BY THE INSPECTOR OF BUILDINGS WITHOUT THE WRITTEN APPROVAL OF A SITE PLAN BY THE PLANNING BOARD.

WAIVERS FROM TOWN OF BOXBOROUGH REGULATIONS FOR THE WETLAND BYLAW:
SECTION 2.5.3.1 PERFORMANCE STANDARDS
WAIVER OF PROHIBITION OF PARKING LOTS, PERMANENT STRUCTURES, AND SANITARY WASTE DISPOSAL SYSTEMS WITHIN ADJACENT LAND RESOURCE AREA, IN ORDER TO ALLOW THE PLACEMENT OF THE PROPOSED SANITARY WASTE DISPOSAL SYSTEM, PARKING LOT, ROAD AND OTHER PERMANENT STRUCTURES WITHIN THE ADJACENT LAND RESOURCE AREA IN ACCORDANCE WITH THE SITE PLAN APPROVED FOR THE PROJECT UNDER THIS COMPREHENSIVE PERMIT.

WAIVERS FROM BOXBOROUGH COMPREHENSIVE PERMIT RULES OF THE ZONING BOARD OF APPEALS:
SECTION 3.02(I) LIST OF REQUESTED EXCEPTIONS
WAIVER OF REQUIREMENT THAT APPLICANT PROVIDES A COMPLETE LIST OF ALL REQUESTED EXCEPTIONS AT THE TIME OF THE INITIAL FILING OF THE APPLICATION IN ORDER TO PERMIT THE LIST TO BE REVISED AS THE PROJECT EVOLVES THROUGH THE HEARING AND APPROVAL PROCESS.

COMMONWEALTH OF MASSACHUSETTS
STEVEN J. WILLIAMS
CIVIL
No. 45119
REGISTERED PROFESSIONAL ENGINEER
7/9/15

PROFESSIONAL ENGINEER FOR
ALLEN & MAJOR ASSOCIATES, INC.

REV	DATE	DESCRIPTION
9.	07/08/2015	ISSUED FOR DEFINITIVE SITE PLAN
8.	06/12/2015	REVISED PER FIRE DEPARTMENT COMMENTS
7.	05/15/2015	ISSUED FOR PERMIT
6.	05/05/2015	ISSUED FOR DEP PERMIT APPROVAL
5.	05/04/2015	REVISED FOR PRICING
4.	03/26/2015	REVISED PER TOWN COMMENTS
3.	03/02/2015	ISSUED FOR MEPA
2.	02/27/2015	REVISED PER TOWN COMMENTS
1.	02/12/2015	ISSUED FOR ZONING BOARD OF APPEALS

APPLICANT:
JPI
3 WEST MAIN STREET, SUITE 203
IRVINGTON, NY 10533

PROJECT:
DEFINITIVE SITE PLAN SET
JEFFERSON AT BEAVER BROOK
BOXBOROUGH, MA

PROJECT NO.	2075-01	DATE:	02-11-2015
SCALE:	1"=20'	DWG. NAME:	C2075-10
DESIGNED BY:	SJL	CHECKED BY:	CMQ

PREPARED BY:

ALLEN & MAJOR ASSOCIATES, INC.
civil & structural engineering • land surveying
environmental consulting • landscape architecture
www.allenmajor.com
100 COMMERCE WAY
P.O. BOX 2118
WOBURN MA 01888-0118
TEL: (781) 935-0889
FAX: (781) 935-2896
WOBURN, MA • LAKEVILLE, MA • MANCHESTER, NH

THIS DRAWING HAS BEEN PREPARED IN ELECTRONIC FORMAT. CLIENT/CLIENT'S REPRESENTATIVE OR CONSULTANT MAY BE PROVIDED COPIES OF DRAWINGS AND SPECIFICATIONS ON MAGNETIC MEDIA FOR HIS/HER INFORMATION AND USE FOR SPECIFIC APPLICATION TO THIS PROJECT. DUE TO THE POTENTIAL THAT THE MAGNETIC INFORMATION MAY BE MODIFIED UNINTENTIONALLY OR OTHERWISE, ALLEN & MAJOR ASSOCIATES, INC. MAY REMOVE ALL INDICATION OF THE DOCUMENT'S AUTHORSHIP ON THE MAGNETIC MEDIA. PRINTED REPRESENTATIONS OF THE DRAWINGS AND SPECIFICATIONS ISSUED SHALL BE THE ONLY RECORD COPIES OF ALLEN & MAJOR ASSOCIATES, INC.'S WORK PRODUCT.

DRAWING TITLE: SPOT GRADE PLAN

SHEET No. C-3C

Copyright©2015 Allen & Major Associates, Inc.
All Rights Reserved

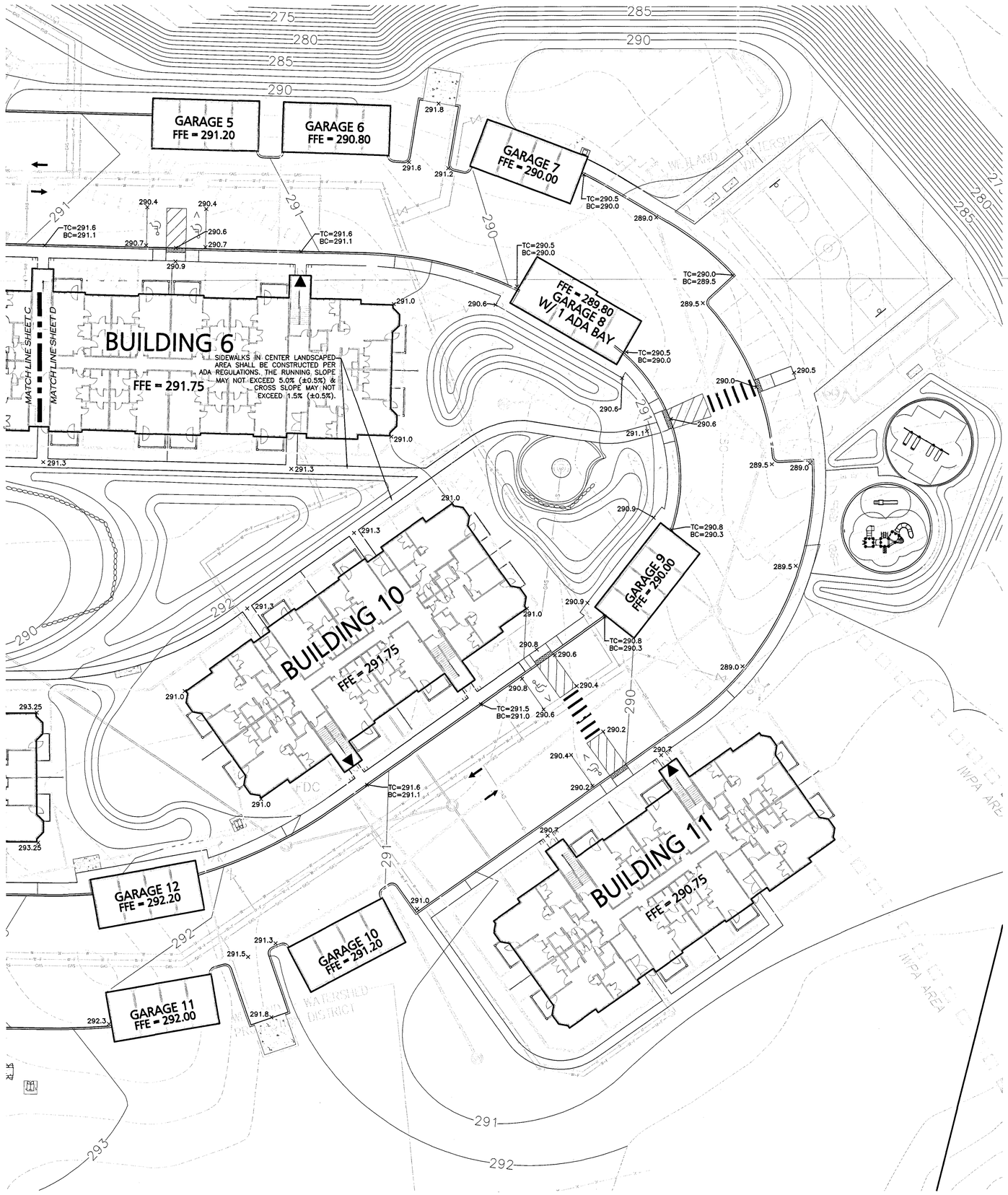

LEGEND:

1' CONTOUR	128
5' CONTOUR	128
SPOT GRADE	×128

GRAPHIC SCALE

20 0 10 20 40 80

(IN FEET)
1 inch = 20 ft.

N:\PROJECTS\2075-01\CIVIL\DRAWINGS\CURRENT\2075-01 - SPOT GRADES.DWG

DIG SAFE

BEFORE YOU DIG
CALL 811 OR
1-888-DIG-SAFE
1-888-344-7233

JPI

WAIVERS OF TOWN OF BOXBOROUGH ZONING BYLAWS:
4.4003(1) USE REGULATION SCHEDULE
WAIVER TO PERMIT SINGLE-FAMILY AND MULTI-FAMILY ATTACHED RESIDENTIAL USES NOT OTHERWISE PERMITTED IN THE INDUSTRIAL/COMMERCIAL DISTRICT (I.E. THE PROPOSED TWO (2) SINGLE FAMILY DWELLINGS AND THE PROPOSED 244 APARTMENT UNITS IN ELEVEN (11) MULTI-FAMILY BUILDINGS, FOR A TOTAL OF 246 UNITS)
4.4033 USE REGULATION SCHEDULE
WAIVER TO PERMIT A USE WHICH IS NOT OTHERWISE ACCESSORY TO INDUSTRIAL-COMMERCIAL USES, I.E., A CLUBHOUSE/RENTAL OFFICE.
5.5002 DIMENSIONAL SCHEDULE
WAIVER OF REQUIREMENT FOR A MAXIMUM FLOOR AREA RATIO OF 0.10.
5.6004 SURFACE, CIRCULATION, AND LANDSCAPING REQUIREMENTS
WAIVER OF REQUIREMENT THAT AUTOMOBILE PARKING SPACES SHALL NOT BE LESS THAN 10 FEET BY 20 FEET, IN ORDER TO ALLOW PARKING SPACE OF 9 FEET BY 18 FEET.
5.6103 MULTIPLE BUILDINGS ON ONE LOT
WAIVER OF REQUIREMENT THAT WHERE MORE THAN ONE BUILDING IS PROPOSED TO BE BUILT UPON A LOT, THE PLAN SHALL BE REVIEWED BY THE PLANNING BOARD REGARDING ADEQUACY OF ACCESS TO BUILDINGS, IN ORDER TO SUBSTITUTE THE PERMISSION FROM THE ZONING BOARD OF APPEALS GRANTED UNDER THIS COMPREHENSIVE PERMIT.
5.6105 PRIVATE/COMMON DRIVEWAYS IN THE BUSINESS, BUSINESS 1, OFFICE PARK, TOWN CENTER, AND INDUSTRIAL-COMMERCIAL DISTRICTS
WAIVER OF THE REQUIREMENT THAT PRIVATE/COMMON DRIVEWAYS ARE ALLOWED IN THE IC DISTRICT ONLY BY SPECIAL PERMIT OF THE PLANNING BOARD, IN ORDER TO SUBSTITUTE THE PERMISSION FROM THE ZONING BOARD OF APPEALS UNDER THIS COMPREHENSIVE PERMIT.
7.7004(G) SPECIAL REGULATIONS AQUIFER PROTECTION DISTRICT
WAIVER OF REQUIREMENT THAT THERE BE NO DISPOSAL OF SANITARY WASTE TO A SUBSURFACE DISPOSAL SYSTEM IN QUANTITIES EXCEEDING 440 GALLONS PER DAY PER ACRE OF AQUIFER PROTECTION DISTRICT CONTAINED WITHIN THE LOT, IN ORDER TO ALLOW QUANTITIES OF UP TO 750 GALLONS PER DAY PER ACRE OF THE SITE IN THE AQUIFER PROTECTION DISTRICT IN THE EVENT RESERVE LEACHING FIELDS ARE USED.
7.7007(1) DESIGN REQUIREMENTS
WAIVER OF REQUIREMENT THAT WHERE A PORTION OF THE SITE IS LOCATED OUTSIDE OF THE AQUIFER PROTECTION DISTRICT, POTENTIAL POLLUTION SOURCES, SUCH AS ON SITE DISPOSAL SYSTEMS, SHOULD BE LOCATED OUTSIDE THE DISTRICT BOUNDARIES, IN ORDER TO ALLOW RESERVE LEACHING FIELD TO BE LOCATED WITHIN THE AQUIFER PROTECTION DISTRICT.
7.7104(D) AND (5) W-DISTRICT USE REGULATIONS
WAIVER OF REQUIREMENTS FOR SPECIAL PERMIT FOR USE IN THE W-DISTRICT, IN ORDER TO SUBSTITUTE APPROVAL UNDER THIS COMPREHENSIVE PERMIT.
7.7106 SUBMITTALS
WAIVER OF REQUIREMENTS FOR SPECIAL PERMIT APPLICATIONS TO BE PREPARED AND SUBMITTED TO THE BOARD OF APPEALS IN ORDER TO PERMIT ONE COMPREHENSIVE SUBMISSION TO THE BOARD TO BE ACTED ON UNDER G.L. C. 40B, §21.
7.7109 PROCEDURES
WAIVER OF REQUIREMENT FOR SPECIAL PERMIT APPLICATIONS TO BE PREPARED AND SUBMITTED TO THE BOARD OF APPEALS IN ORDER TO PERMIT A SINGLE COMPREHENSIVE PERMIT SUBMISSION TO THE BOARD TO BE ACTED UPON UNDER G.L. C.40B, §21.
7.7200 LANDS BORDERING THE W-DISTRICT
WAIVER OF REQUIREMENT FOR SPECIAL PERMIT TO PLACE STRUCTURES WITHIN ONE HUNDRED (100') FEET OF THE W-DISTRICT, IN ORDER TO PERMIT CONSTRUCTION OF WARD ROAD AND A FIRE POND WITHIN 100' OF W-DISTRICT.
8.8000 SITE PLAN APPROVAL & DESIGN REVIEW
WAIVER OF REQUIREMENT FOR SITE PLAN REVIEW BY THE PLANNING BOARD FOR CONSTRUCTION OF MULTI-FAMILY STRUCTURES AND PARKING AREAS ASSOCIATED WITH MULTI-FAMILY STRUCTURES.
9.9001(2) BUILDING PERMITS
WAIVER OF REQUIREMENT THAT NO BUILDING PERMIT SHALL BE ISSUED BY THE INSPECTOR OF BUILDINGS WITHOUT THE WRITTEN APPROVAL OF A SITE PLAN BY THE PLANNING BOARD.

WAIVERS FROM TOWN OF BOXBOROUGH REGULATIONS FOR THE WETLAND BYLAW:
SECTION 2.5.3.1 PERFORMANCE STANDARDS
WAIVER OF PROHIBITION OF PARKING LOTS, PERMANENT STRUCTURES, AND SANITARY WASTE DISPOSAL SYSTEMS WITHIN ADJACENT LAND RESOURCE AREA, IN ORDER TO ALLOW THE PLACEMENT OF THE PROPOSED SANITARY WASTE DISPOSAL SYSTEM, PARKING LOT, ROAD AND OTHER PERMANENT STRUCTURES WITHIN THE ADJACENT LAND RESOURCE AREA IN ACCORDANCE WITH THE SITE PLAN APPROVED FOR THE PROJECT UNDER THIS COMPREHENSIVE PERMIT.

WAIVERS FROM BOXBOROUGH COMPREHENSIVE PERMIT RULES OF THE ZONING BOARD OF APPEALS:
SECTION 3.02(1) LIST OF REQUESTED EXCEPTIONS
WAIVER OF REQUIREMENT THAT APPLICANT PROVIDES A COMPLETE LIST OF ALL REQUESTED EXCEPTIONS AT THE TIME OF THE INITIAL FILING OF THE APPLICATION IN ORDER TO PERMIT THE LIST TO BE REVISED AS THE PROJECT EVOLVES THROUGH THE HEARING AND APPROVAL PROCESS.

7/9/15
COMMONWEALTH OF MASSACHUSETTS
CHRISTOPHER M. WILLIAMS
CIVIL
No.43119
REGISTERED PROFESSIONAL ENGINEER
PROFESSIONAL ENGINEER FOR
ALLEN & MAJOR ASSOCIATES, INC.

REV	DATE	DESCRIPTION
9.	07/08/2015	ISSUED FOR DEFINITIVE SITE PLAN
8.	06/12/2015	REVISED PER FIRE DEPARTMENT COMMENTS
7.	05/15/2015	ISSUED FOR PERMIT
6.	05/05/2015	ISSUED FOR DEP PERMIT APPROVAL
5.	05/04/2015	REVISED FOR PRICING
4.	03/26/2015	REVISED PER TOWN COMMENTS
3.	03/02/2015	ISSUED FOR MEPA
2.	02/27/2015	REVISED PER TOWN COMMENTS
1.	02/12/2015	ISSUED FOR ZONING BOARD OF APPEALS

APPLICANT:
JPI
3 WEST MAIN STREET, SUITE 203
IRVINGTON, NY 10533

PROJECT:
DEFINITIVE SITE PLAN SET
JEFFERSON AT BEAVER BROOK
BOXBOROUGH, MA

PROJECT NO.	2075-01	DATE:	02-11-2015
SCALE:	1"=20'	DWG. NAME:	C2075-10
DESIGNED BY:	SJL	CHECKED BY:	CMQ

PREPARED BY:

ALLEN & MAJOR ASSOCIATES, INC.
civil & structural engineering ◆ land surveying
environmental consulting ◆ landscape architecture
www.allenmajor.com
100 COMMERCE WAY
P.O. BOX 2118
WOBURN MA 01888-0118
TEL: (781) 935-6889
FAX: (781) 935-2896
WOBURN, MA ◆ LAKEVILLE, MA ◆ MANCHESTER, NH

THIS DRAWING HAS BEEN PREPARED IN ELECTRONIC FORMAT. CLIENT/CLIENT'S REPRESENTATIVE OR CONSULTANT MAY BE PROVIDED COPIES OF DRAWINGS AND SPECIFICATIONS ON MAGNETIC MEDIA FOR HIS/HER INFORMATION AND USE FOR SPECIFIC APPLICATION TO THIS PROJECT. DUE TO THE POTENTIAL THAT THE MAGNETIC INFORMATION MAY BE MODIFIED UNINTENTIONALLY OR OTHERWISE, ALLEN & MAJOR ASSOCIATES, INC. MAY REMOVE ALL INDICATION OF THE DOCUMENTS AUTHORSHIP ON THE MAGNETIC MEDIA. PRINTED REPRESENTATIONS OF THE DRAWINGS AND SPECIFICATIONS ISSUED SHALL BE THE ONLY RECORD COPIES OF ALLEN & MAJOR ASSOCIATES, INC.'S WORK PRODUCT.

DRAWING TITLE:
SPOT GRADE PLAN

SHEET No.
C-3D

Copyright©2015 Allen & Major Associates, Inc.
All Rights Reserved

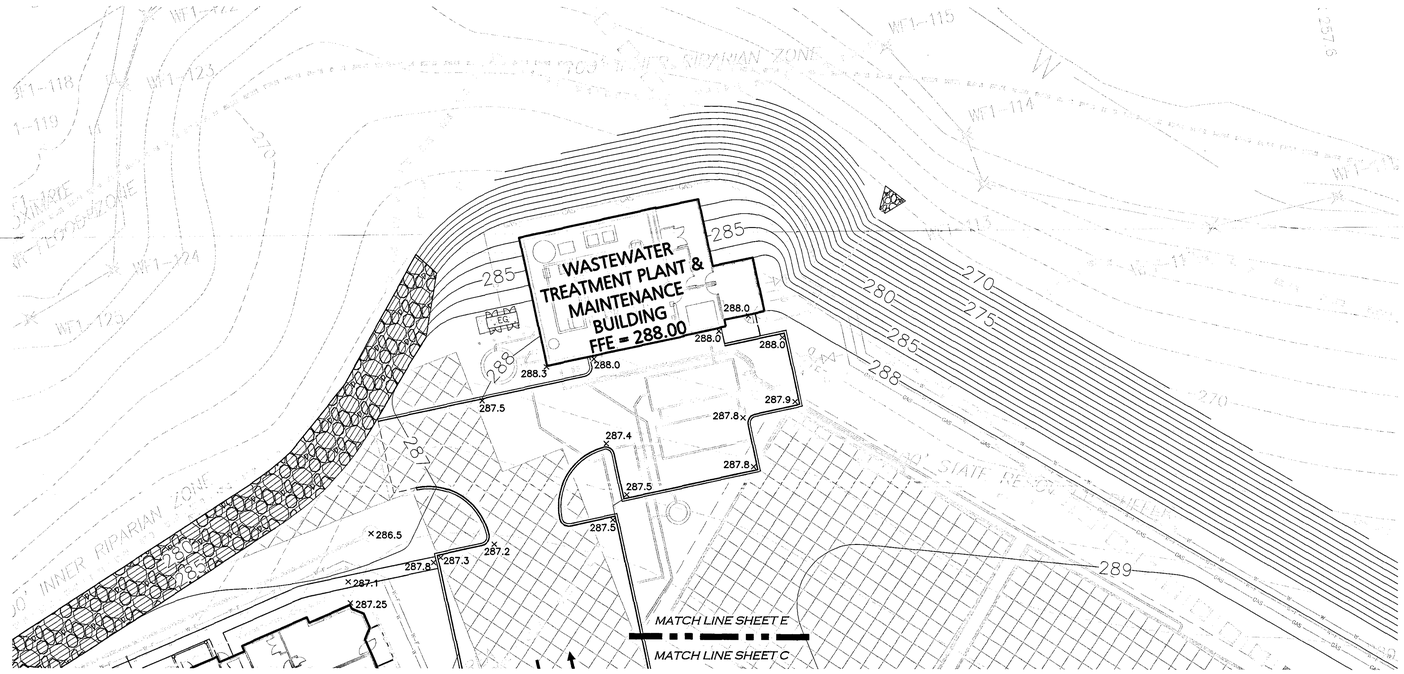

LEGEND:

1' CONTOUR	128
5' CONTOUR	128
SPOT GRADE	×128

DIG SAFE

BEFORE YOU DIG
CALL 811 OR
1-888-DIG-SAFE
1-888-344-7233

GRAPHIC SCALE

20 0 10 20 40 80

(IN FEET)
1 inch = 20 ft.

N:\PROJECTS\2075-01\CIVIL\DRAWINGS\CURRENT\2075-01 - SPOT GRADES.DWG

JPI

WAIVERS OF TOWN OF BOXBOROUGH ZONING BYLAWS:

4.4003(1) USE REGULATION SCHEDULE
WAIVER TO PERMIT SINGLE-FAMILY AND MULTI-FAMILY ATTACHED RESIDENTIAL USES NOT OTHERWISE PERMITTED IN THE INDUSTRIAL COMMERCIAL DISTRICT (I.E., THE PROPOSED TWO (2) SINGLE FAMILY DWELLINGS AND THE PROPOSED 244 APARTMENT UNITS IN ELEVEN (11) MULTI-FAMILY BUILDINGS, FOR A TOTAL OF 246 UNITS)

4.4033 USE REGULATION SCHEDULE
WAIVER TO PERMIT A USE WHICH IS NOT OTHERWISE ACCESSORY TO INDUSTRIAL-COMMERCIAL USES, I.E., A CLUBHOUSE/RENTAL OFFICE.

5.5000 DIMENSIONAL SCHEDULE
WAIVER OF REQUIREMENT FOR A MAXIMUM FLOOR AREA RATIO OF 0.10.

6.6004 SURFACE, CIRCULATION, AND LANDSCAPING REQUIREMENTS
WAIVER OF REQUIREMENT THAT AUTOMOBILE PARKING SPACES SHALL NOT BE LESS THAN 10 FEET BY 20 FEET, IN ORDER TO ALLOW PARKING SPACE OF 9 FEET BY 18 FEET.

6.6103 MULTIPLE BUILDINGS ON ONE LOT
WAIVER OF REQUIREMENT THAT WHERE NO MORE THAN ONE BUILDING IS PROPOSED TO BE BUILT UPON A LOT, THE PLAN SHALL BE REVIEWED BY THE PLANNING BOARD REGARDING ADEQUACY OF ACCESS TO BUILDINGS, IN ORDER TO SUBSTITUTE THE PERMISSION FROM THE ZONING BOARD OF APPEALS GRANTED UNDER THIS COMPREHENSIVE PERMIT.

6.6105 PRIVATE/COMMON DRIVEWAYS IN THE BUSINESS, BUSINESS 1, OFFICE PARK, TOWN CENTER, AND INDUSTRIAL-COMMERCIAL DISTRICTS
WAIVER OF THE REQUIREMENT THAT PRIVATE/COMMON DRIVEWAYS ARE ALLOWED IN THE IC DISTRICT ONLY BY SPECIAL PERMIT OF THE PLANNING BOARD, IN ORDER TO SUBSTITUTE THE PERMISSION FROM THE ZONING BOARD OF APPEALS UNDER THIS COMPREHENSIVE PERMIT.

7.7004(G) SPECIAL REGULATIONS AQUIFER PROTECTION DISTRICT
WAIVER OF REQUIREMENT THAT THERE BE NO DISPOSAL OF SANITARY WASTE TO A SUBSURFACE DISPOSAL SYSTEM IN QUANTITIES EXCEEDING 440 GALLONS PER DAY PER ACRE OF AQUIFER PROTECTION DISTRICT CONTAINED WITHIN THE LOT, IN ORDER TO ALLOW QUANTITIES OF UP TO 750 GALLONS PER DAY PER ACRE OF THE SITE IN THE AQUIFER PROTECTION DISTRICT IN THE EVENT RESERVE LEACHING FIELDS ARE USED.

7.7007(1) DESIGN REQUIREMENTS
WAIVER OF REQUIREMENT THAT WHERE A PORTION OF THE SITE IS LOCATED OUTSIDE OF THE AQUIFER PROTECTION DISTRICT, POTENTIAL POLLUTION SOURCES, SUCH AS ON SITE DISPOSAL SYSTEMS, SHALL BE LOCATED OUTSIDE THE DISTRICT BOUNDARIES, IN ORDER TO ALLOW RESERVE LEACHING FIELD TO BE LOCATED WITHIN THE AQUIFER PROTECTION DISTRICT.

7.7104(G) AND (H) W-DISTRICT USE REGULATIONS
WAIVER OF REQUIREMENTS FOR SPECIAL PERMIT FOR USE IN THE W-DISTRICT, IN ORDER TO SUBSTITUTE APPROVAL UNDER THIS COMPREHENSIVE PERMIT.

7.7106 SUBMITTALS
WAIVER OF REQUIREMENTS FOR SPECIAL PERMIT APPLICATIONS TO BE PREPARED AND SUBMITTED TO THE BOARD OF APPEALS, IN ORDER TO PERMIT ONE COMPREHENSIVE SUBMISSION TO THE BOARD TO BE ACTED ON UNDER G.L. C. 40B, §21.

7.7109 PROCEDURES
WAIVER OF REQUIREMENT FOR SPECIAL PERMIT APPLICATIONS TO BE PREPARED AND SUBMITTED TO THE BOARD OF APPEALS IN ORDER TO PERMIT A SINGLE COMPREHENSIVE PERMIT SUBMISSION TO THE BOARD TO BE ACTED UPON UNDER G.L. C.40B, §21.

7.7220 LANDS BORDERING THE W-DISTRICT
WAIVER OF REQUIREMENT FOR SPECIAL PERMIT TO PLACE STRUCTURES WITHIN ONE HUNDRED (100') FEET OF THE W-DISTRICT, IN ORDER TO PERMIT CONSTRUCTION OF WARD ROAD AND A FIRE POND WITHIN 100' OF W-DISTRICT.

8.8000 SITE PLAN APPROVAL & DESIGN REVIEW
WAIVER OF REQUIREMENT FOR SITE PLAN REVIEW BY THE PLANNING BOARD FOR CONSTRUCTION OF MULTI-FAMILY STRUCTURES AND PARKING AREAS ASSOCIATED WITH MULTI-FAMILY STRUCTURES.

9.9001(2) BUILDING PERMITS
WAIVER OF REQUIREMENT THAT NO BUILDING PERMIT SHALL BE ISSUED BY THE INSPECTOR OF BUILDINGS WITHOUT THE WRITTEN APPROVAL OF A SITE PLAN BY THE PLANNING BOARD.

WAIVERS FROM TOWN OF BOXBOROUGH REGULATIONS FOR THE WETLAND BYLAW:

SECTION 2.5.3.1 PERFORMANCE STANDARDS
WAIVER OF PROHIBITION OF PARKING LOTS, PERMANENT STRUCTURES, AND SANITARY WASTE DISPOSAL SYSTEMS WITHIN ADJACENT LAND RESOURCE AREA, IN ORDER TO ALLOW THE PLACEMENT OF THE PROPOSED SANITARY WASTE DISPOSAL SYSTEM, PARKING LOT, ROAD AND OTHER PERMANENT STRUCTURES WITHIN THE ADJACENT LAND RESOURCE AREA IN ACCORDANCE WITH THE SITE PLAN APPROVED FOR THE PROJECT UNDER THIS COMPREHENSIVE PERMIT.

WAIVERS FROM BOXBOROUGH COMPREHENSIVE PERMIT RULES OF THE ZONING BOARD OF APPEALS:

SECTION 3.02(I) LIST OF REQUESTED EXCEPTIONS
WAIVER OF REQUIREMENT THAT APPLICANT PROVIDES A COMPLETE LIST OF ALL REQUESTED EXCEPTIONS AS THE TIME OF THE INITIAL FILING OF THE APPLICATION IN ORDER TO PERMIT THE LIST TO BE REVISED AS THE PROJECT EVOLVES THROUGH THE HEARING AND APPROVAL PROCESS.

TIMOTHY J. WILLIAMS CIVIL No.43119 REGISTERED PROFESSIONAL ENGINEER

PROFESSIONAL ENGINEER FOR
ALLEN & MAJOR ASSOCIATES, INC.

REV	DATE	DESCRIPTION
9.	07/08/2015	ISSUED FOR DEFINITIVE SITE PLAN
8.	06/12/2015	REVISED PER FIRE DEPARTMENT COMMENTS
7.	05/15/2015	ISSUED FOR PERMIT
6.	05/05/2015	ISSUED FOR DEP PERMIT APPROVAL
5.	05/04/2015	REVISED FOR PRICING
4.	03/26/2015	REVISED PER TOWN COMMENTS
3.	03/02/2015	ISSUED FOR MEPA
2.	02/27/2015	REVISED PER TOWN COMMENTS
1.	02/12/2015	ISSUED FOR ZONING BOARD OF APPEALS

APPLICANT:

JPI
3 WEST MAIN STREET, SUITE 203
IRVINGTON, NY 10533

PROJECT:

DEFINITIVE SITE PLAN SET
JEFFERSON AT BEAVER BROOK
BOXBOROUGH, MA

PROJECT NO.	2075-01	DATE:	02-11-2015
SCALE:	1"=20'	DWG. NAME:	C2075-10
DESIGNED BY:	SJL	CHECKED BY:	CMQ

PREPARED BY:

ALLEN & MAJOR ASSOCIATES, INC.
civil & structural engineering ◆ land surveying
environmental consulting ◆ landscape architecture
www.allenmajor.com
100 COMMERCE WAY
P.O. BOX 2118
WOBURN MA 01888-0118
TEL: (781) 935-6889
FAX: (781) 935-2896
WOBURN, MA ◆ LAKEVILLE, MA ◆ MANCHESTER, NH

THIS DRAWING HAS BEEN PREPARED IN ELECTRONIC FORMAT. CLIENT/CLIENT'S REPRESENTATIVE OR CONSULTANT MAY BE PROVIDED COPIES OF DRAWINGS AND SPECIFICATIONS ON MAGNETIC MEDIA FOR HIS/HER INFORMATION AND USE FOR SPECIFIC APPLICATION TO THIS PROJECT. DUE TO THE POTENTIAL THAT THE MAGNETIC INFORMATION MAY BE MODIFIED UNINTENTIONALLY OR OTHERWISE, ALLEN & MAJOR ASSOCIATES, INC. MAY REMOVE ALL INDICATION OF THE DOCUMENT'S AUTHORSHIP ON THE MAGNETIC MEDIA. PRINTED REPRESENTATIONS OF THE DRAWINGS AND SPECIFICATIONS ISSUED SHALL BE THE ONLY RECORD COPIES OF ALLEN & MAJOR ASSOCIATES, INC.'S WORK PRODUCT.

DRAWING TITLE:

SPOT GRADE PLAN

SHEET No.

C-3E

Copyright©2015 Allen & Major Associates, Inc.
All Rights Reserved

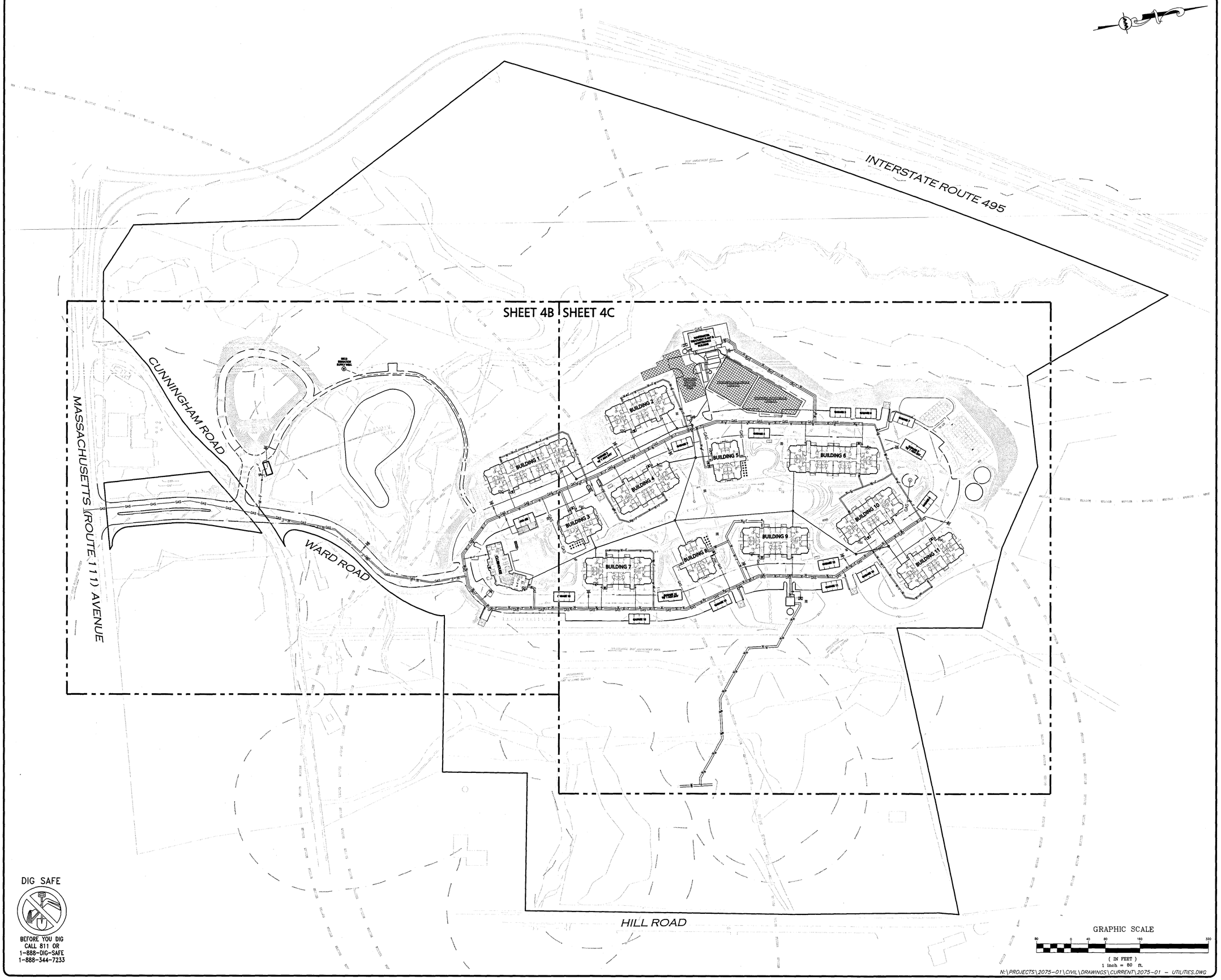

DIG SAFE

BEFORE YOU DIG
CALL 811 OR
1-888-DIG-SAFE
1-888-344-7233

JPI

WAIVERS OF TOWN OF BOXBOROUGH ZONING BYLAWS:

4.4032(1) USE REGULATION SCHEDULE
WAIVER TO PERMIT SINGLE-FAMILY AND MULTI-FAMILY ATTACHED RESIDENTIAL USES IS NOT OTHERWISE PERMITTED IN THE INDUSTRIAL COMMERCIAL DISTRICT (I.E., THE PROPOSED TWO (2) SINGLE FAMILY DWELLINGS AND THE PROPOSED 244 APARTMENT UNITS IN ELEVEN (11) MULTI-FAMILY BUILDINGS, FOR A TOTAL OF 246 UNITS)

4.4033 USE REGULATION SCHEDULE
WAIVER TO PERMIT A USE WHICH IS NOT OTHERWISE ACCESSORY TO INDUSTRIAL-COMMERCIAL USES, I.E., A CLUBHOUSE/RENTAL OFFICE.

5.5002 DIMENSIONAL SCHEDULE
WAIVER OF REQUIREMENT FOR A MAXIMUM FLOOR AREA RATIO OF 0.10.

6.6004 SURFACE, CIRCULATION, AND LANDSCAPING REQUIREMENTS
WAIVER OF REQUIREMENT THAT AUTOMOBILE PARKING SPACES SHALL NOT BE LESS THAN 10 FEET BY 20 FEET, IN ORDER TO ALLOW PARKING SPACE OF 9 FEET BY 18 FEET.

6.6103 MULTIPLE BUILDINGS ON ONE LOT
WAIVER OF REQUIREMENT THAT WHERE MORE THAN ONE BUILDING IS PROPOSED TO BE BUILT UPON A LOT, THE PLAN SHALL BE REVIEWED BY THE PLANNING BOARD REGARDING ADEQUACY OF ACCESS TO BUILDINGS, IN ORDER TO SUBSTITUTE THE PERMISSION FROM THE ZONING BOARD OF APPEALS GRANTED UNDER THIS COMPREHENSIVE PERMIT.

6.6105 PRIVATE/COMMON DRIVEWAYS IN THE BUSINESS, BUSINESS 1, OFFICE PARK, TOWN CENTER, AND INDUSTRIAL-COMMERCIAL DISTRICTS
WAIVER OF THE REQUIREMENT THAT PRIVATE/COMMON DRIVEWAYS ARE ALLOWED IN THE IC DISTRICT ONLY BY SPECIAL PERMIT OF THE PLANNING BOARD, IN ORDER TO SUBSTITUTE THE PERMISSION FROM THE ZONING BOARD OF APPEALS UNDER THIS COMPREHENSIVE PERMIT.

7.7004(G) SPECIAL REGULATIONS AQUIFER PROTECTION DISTRICT
WAIVER OF REQUIREMENT THAT THERE BE NO DISPOSAL OF SANITARY WASTE TO A SUBSURFACE DISPOSAL SYSTEM IN QUANTITIES EXCEEDING 440 GALLONS PER DAY PER ACRE OF AQUIFER PROTECTION DISTRICT CONTAINED WITHIN THE LOT, IN ORDER TO ALLOW QUANTITIES OF UP TO 750 GALLONS PER DAY PER ACRE OF THE SITE IN THE AQUIFER PROTECTION DISTRICT IN THE EVENT RESERVE LEACHING FIELDS ARE USED.

7.7007(1) DESIGN REQUIREMENTS
WAIVER OF REQUIREMENT THAT WHERE A PORTION OF THE SITE IS LOCATED OUTSIDE OF THE AQUIFER PROTECTION DISTRICT, POTENTIAL POLLUTION SOURCES, SUCH AS ON SITE DISPOSAL SYSTEMS, SHOULD BE LOCATED OUTSIDE THE DISTRICT BOUNDARIES, IN ORDER TO ALLOW RESERVE LEACHING FIELD TO BE LOCATED WITHIN THE AQUIFER PROTECTION DISTRICT.

7.7104(D) AND (N) W-DISTRICT USE REGULATIONS
WAIVER OF REQUIREMENTS FOR SPECIAL PERMIT FOR USE IN THE W-DISTRICT, IN ORDER TO SUBSTITUTE APPROVAL UNDER THIS COMPREHENSIVE PERMIT.

7.7106 SUBMITTALS
WAIVER OF REQUIREMENTS FOR SPECIAL PERMIT APPLICATIONS TO BE PREPARED AND SUBMITTED TO THE BOARD OF APPEALS, IN ORDER TO PERMIT ONE COMPREHENSIVE SUBMISSION TO THE BOARD TO BE ACTED ON UNDER G.L. C. 40B, §21.

7.7109 PROCEDURES
WAIVER OF REQUIREMENT FOR SPECIAL PERMIT APPLICATIONS TO BE PREPARED AND SUBMITTED TO THE BOARD OF APPEALS IN ORDER TO PERMIT A SINGLE COMPREHENSIVE PERMIT SUBMISSION TO THE BOARD TO BE ACTED UPON UNDER G.L. C.40B, §21.

7.7200 LANDS BORDERING THE W-DISTRICT
WAIVER OF REQUIREMENT FOR SPECIAL PERMIT TO PLACE STRUCTURES WITHIN ONE HUNDRED (100') FEET OF THE W-DISTRICT, IN ORDER TO PERMIT CONSTRUCTION OF WARD ROAD AND A FIRE POND WITHIN 100' OF W-DISTRICT.

8.8000 SITE PLAN APPROVAL & DESIGN REVIEW
WAIVER OF REQUIREMENT FOR SITE PLAN REVIEW BY THE PLANNING BOARD FOR THE CONSTRUCTION OF MULTI-FAMILY STRUCTURES AND PARKING AREAS ASSOCIATED WITH MULTI-FAMILY STRUCTURES.

9.9001(2) BUILDING PERMITS
WAIVER OF REQUIREMENT THAT NO BUILDING PERMIT SHALL BE ISSUED BY THE INSPECTOR OF BUILDINGS WITHOUT THE WRITTEN APPROVAL OF A SITE PLAN BY THE PLANNING BOARD.

WAIVERS FROM TOWN OF BOXBOROUGH REGULATIONS FOR THE WETLAND BYLAW:

SECTION 2.5.3.1 PERFORMANCE STANDARDS
WAIVER OF PROHIBITION OF PARKING LOTS, PERMANENT STRUCTURES, AND SANITARY WASTE DISPOSAL SYSTEMS WITHIN ADJACENT LAND RESOURCE AREA, IN ORDER TO ALLOW THE PLACEMENT OF THE PROPOSED SANITARY WASTE DISPOSAL SYSTEM, PARKING LOT, ROAD AND OTHER PERMANENT STRUCTURES WITHIN THE ADJACENT LAND RESOURCE AREA IN ACCORDANCE WITH THE SITE PLAN APPROVED FOR THE PROJECT UNDER THIS COMPREHENSIVE PERMIT.

WAIVERS FROM BOXBOROUGH COMPREHENSIVE PERMIT RULES OF THE BOARD OF APPEALS:

SECTION 3.02(I) LIST OF REQUESTED EXCEPTIONS
WAIVER OF REQUIREMENT THAT APPLICANT PROVIDES A COMPLETE LIST OF ALL REQUESTED EXCEPTIONS AT THE TIME OF THE INITIAL FILING OF THE APPLICATION IN ORDER TO PERMIT THE LIST TO BE REVISED AS THE PROJECT EVOLVES THROUGH THE HEARING AND APPROVAL PROCESS.

TIMOTHY J. WILLIAMS CIVIL No. 43119 REGISTERED PROFESSIONAL ENGINEER
COMMONWEALTH OF MASSACHUSETTS
7/8/15

PROFESSIONAL ENGINEER FOR
ALLEN & MAJOR ASSOCIATES, INC.

REV	DATE	DESCRIPTION
9.	07/08/2015	ISSUED FOR DEFINITIVE SITE PLAN
8.	06/12/2015	REVISED PER FIRE DEPARTMENT COMMENTS
7.	05/15/2015	ISSUED FOR PERMIT
6.	05/05/2015	ISSUED FOR DEP PERMIT APPROVAL
5.	05/04/2015	REVISED FOR PRICING
4.	03/26/2015	REVISED PER TOWN COMMENTS
3.	03/02/2015	ISSUED FOR MEPA
2.	02/27/2015	REVISED PER TOWN COMMENTS
1.	02/12/2015	ISSUED FOR ZONING BOARD OF APPEALS

APPLICANT:

JPI
3 WEST MAIN STREET, SUITE 203
IRVINGTON, NY 10533

PROJECT:

DEFINITIVE SITE PLAN SET
JEFFERSON AT BEAVER BROOK
BOXBOROUGH, MA

PROJECT NO.	2075-01	DATE:	02-11-2015
SCALE:	1"=80'	DWG. NAME:	C2075-10
DESIGNED BY:	SJL	CHECKED BY:	CMQ

PREPARED BY:

ALLEN & MAJOR ASSOCIATES, INC.
civil & structural engineering • land surveying
environmental consulting • landscape architecture
www.allenmajor.com
100 COMMERCE WAY
P.O. BOX 2118
WOBURN MA 01888-0118
TEL: (781) 935-6889
FAX: (781) 935-2896
WOBURN, MA • LAKEVILLE, MA • MANCHESTER, NH

THIS DRAWING HAS BEEN PREPARED IN ELECTRONIC FORMAT. CLIENT/CLIENT'S REPRESENTATIVE OR CONSULTANT MAY BE PROVIDED COPIES OF DRAWINGS AND SPECIFICATIONS ON MAGNETIC MEDIA FOR HIS/HER INFORMATION AND USE FOR SPECIFIC APPLICATION TO THIS PROJECT. DUE TO THE POTENTIAL THAT THE MAGNETIC INFORMATION MAY BE MODIFIED UNINTENTIONALLY OR OTHERWISE, ALLEN & MAJOR ASSOCIATES, INC. MAY REMOVE ALL INDICATION OF THE DOCUMENT'S AUTHORSHIP ON THE MAGNETIC MEDIA. PRINTED REPRESENTATIONS OF THE DRAWINGS AND SPECIFICATIONS ISSUED SHALL BE THE ONLY RECORD COPIES OF ALLEN & MAJOR ASSOCIATES, INC.'S WORK PRODUCT.

DRAWING TITLE:	SHEET No.
UTILITY PLAN	C-4A

Copyright©2015 Allen & Major Associates, Inc.
All Rights Reserved

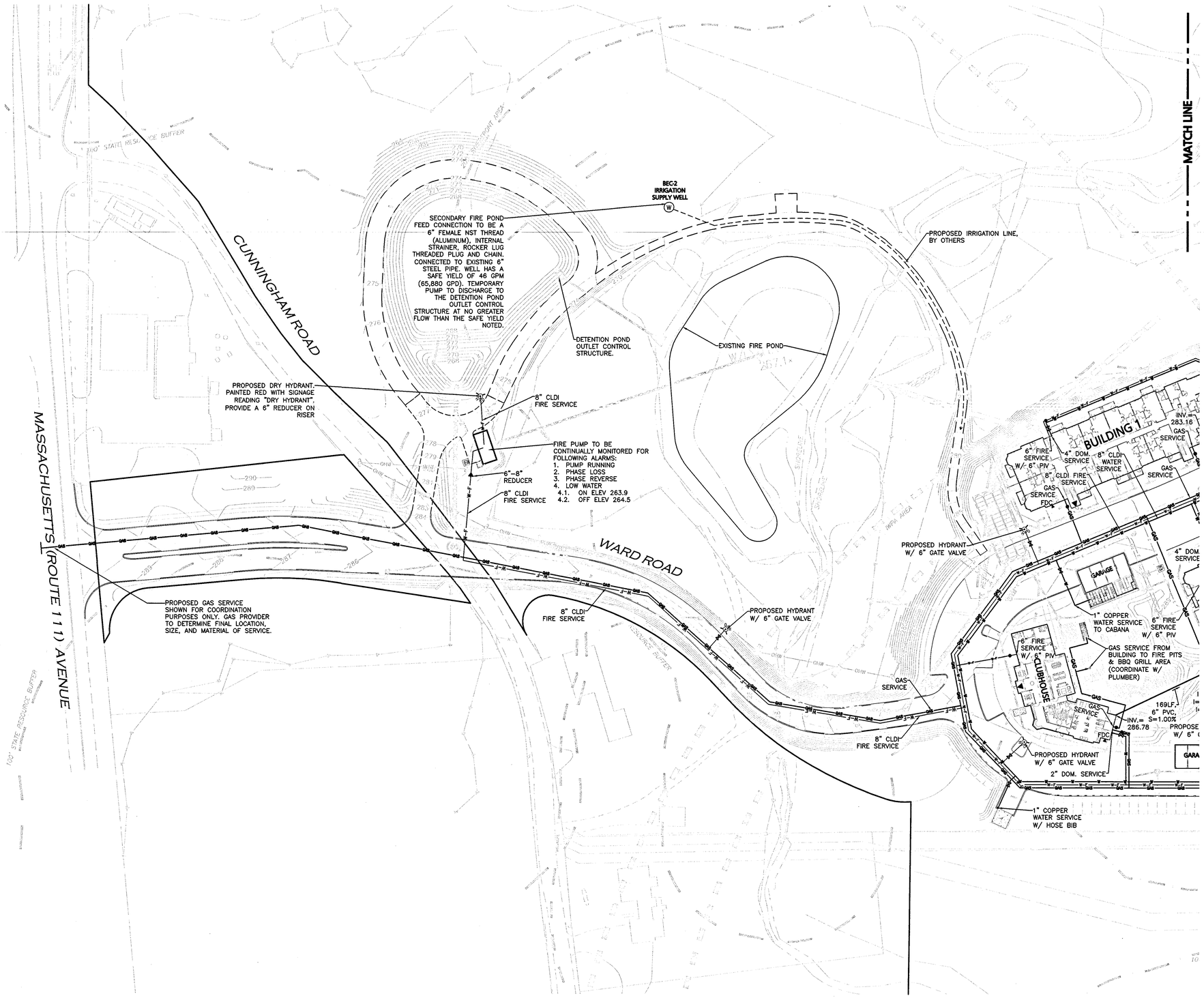

LEGEND:

SEWER MANHOLE	S
SEWER CLEANOUT	C
SEWER VENT	V
SEWER LINE	
WATER (FIRE SERVICE)	W-F
POST INDICATOR VALVE (PIV)	
FIRE DEPT. CONNECTION	FDC
WATER (DOMESTIC SERVICE)	W
WATER VALVE	WV
HYDRANT	
WATER LINE REDUCER	
GAS LINE	GAS
GAS VALVE	GV
SEPTIC/HOLDING TANK	

NOTES:

1. THE LOCATIONS OF EXISTING UNDERGROUND UTILITIES ARE SHOWN IN AN APPROXIMATE WAY ONLY AND HAVE NOT BEEN INDEPENDENTLY VERIFIED BY THE OWNER OR IT'S REPRESENTATIVE. THE CONTRACTOR SHALL DETERMINE THE EXACT LOCATION OF ALL EXISTING UTILITIES BEFORE COMMENCING WORK, AND AGREES TO BE FULLY RESPONSIBLE FOR ANY AND ALL DAMAGES WHICH MIGHT BE OCCASIONED BY THE CONTRACTOR'S FAILURE TO EXACTLY LOCATE AND PRESERVE ANY AND ALL UNDERGROUND UTILITIES.
2. THE INFORMATION SHOWN ON THIS PLAN IS THE SOLE PROPERTY OF ALLEN & MAJOR ASSOCIATES, INC. IT'S INTENDED USE IS TO PROVIDE INFORMATION. ANY ALTERATION, MISUSE, OR RECALCULATION OF INFORMATION OR DATA WITHOUT THE EXPRESSED, WRITTEN CONSENT OF ALLEN & MAJOR ASSOCIATES, INC. IS STRICTLY PROHIBITED.
3. GAS SERVICE SIZE TO BE CONFIRMED BY MECHANICAL ENGINEER AND SERVICE PROVIDER.
4. FIRE SERVICE SIZE TO BE CONFIRMED BY FIRE PROTECTION ENGINEER.
5. MEA SHALL PROVIDE A COORDINATION PLAN FOR CONSTRUCTION OF THE SEWER PUMP STATION, WASTEWATER TREATMENT SYSTEM, AND WASTEWATER LEACHING FIELD.

▼ DENOTES BUILDING ENTRANCE TO INCLUDE:
1. VIDEO MONITOR
2. MAILBOX ACCESS
3. FIRE DEPARTMENT KNOX BOX
4. FIRE DEPARTMENT BEACON
5. FIRE ACCESS CONTROL PANEL

GRAPHIC SCALE
40 0 20 40 80 160
(IN FEET)
1 inch = 40 ft.

N:\PROJECTS\2075-01\CIVIL\DRAWINGS\CURRENT\2075-01 - UTILITIES.DWG

DIG SAFE
BEFORE YOU DIG CALL 811 OR 1-888-DIG-SAFE 1-888-344-7233

WAIVERS OF TOWN OF BOXBOROUGH ZONING BYLAWS:
4.4003(1) USE REGULATION SCHEDULE
WAIVER TO PERMIT SINGLE-FAMILY AND MULTI-FAMILY ATTACHED RESIDENTIAL USES NOT OTHERWISE PERMITTED IN THE INDUSTRIAL COMMERCIAL DISTRICT (I.E. THE PROPOSED TWO (2) SINGLE FAMILY DWELLINGS AND THE PROPOSED 244 APARTMENT UNITS IN ELEVEN (11) MULTI-FAMILY BUILDINGS, FOR A TOTAL OF 246 UNITS)
4.4033 USE REGULATION SCHEDULE
WAIVER TO PERMIT A USE WHICH IS NOT OTHERWISE ACCESSORY TO INDUSTRIAL-COMMERCIAL USES, I.E., A CLUBHOUSE/RENTAL OFFICE.
5.5002 DIMENSIONAL SCHEDULE
WAIVER OF REQUIREMENT FOR A MAXIMUM FLOOR AREA RATIO OF 0.10.
6.6004 SURFACE, CIRCULATION, AND LANDSCAPING REQUIREMENTS
WAIVER OF REQUIREMENT THAT AUTOMOBILE PARKING SPACES SHALL NOT BE LESS THAN TO FEET BY 20 FEET, IN ORDER TO ALLOW PARKING SPACE OF 9 FEET BY 18 FEET.
6.6103 MULTIPLE BUILDINGS ON ONE LOT
WAIVER OF REQUIREMENT THAT WHERE MORE THAN ONE BUILDING IS PROPOSED TO BE BUILT UPON A LOT, THE PLAN SHALL BE REVIEWED BY THE PLANNING BOARD REGARDING ADEQUACY OF ACCESS TO BUILDINGS, IN ORDER TO SUBSTITUTE THE PERMISSION FROM THE ZONING BOARD OF APPEALS GRANTED UNDER THIS COMPREHENSIVE PERMIT.
6.6105 PRIVATE/COMMON DRIVEWAYS IN THE BUSINESS, BUSINESS 1, OFFICE PARK, TOWN CENTER, AND INDUSTRIAL-COMMERCIAL DISTRICTS
WAIVER OF THE REQUIREMENT THAT PRIVATE/COMMON DRIVEWAYS ARE ALLOWED IN THE IC DISTRICT ONLY BY SPECIAL PERMIT OF THE PLANNING BOARD, IN ORDER TO SUBSTITUTE THE PERMISSION FROM THE ZONING BOARD OF APPEALS UNDER THIS COMPREHENSIVE PERMIT.
7.7004(G) SPECIAL REGULATIONS AQUIFER PROTECTION DISTRICT
WAIVER OF REQUIREMENT THAT THERE BE NO DISPOSAL OF SANITARY WASTE TO A SUBSURFACE DISPOSAL SYSTEM IN QUANTITIES EXCEEDING 440 GALLONS PER DAY PER ACRE OF AQUIFER PROTECTION DISTRICT CONTAINED WITHIN THE LOT, IN ORDER TO ALLOW QUANTITIES OF UP TO 750 GALLONS PER DAY PER ACRE OF THE SITE IN THE AQUIFER PROTECTION DISTRICT IN THE EVENT RESERVE LEACHING FIELDS ARE USED.
7.7007(1) DESIGN REQUIREMENTS
WAIVER OF REQUIREMENT THAT WHERE A PORTION OF THE SITE IS LOCATED OUTSIDE OF THE AQUIFER PROTECTION DISTRICT, POTENTIAL POLLUTION SOURCES, SUCH AS ON SITE DISPOSAL SYSTEMS, SHOULD BE LOCATED OUTSIDE THE DISTRICT BOUNDARIES, IN ORDER TO ALLOW RESERVE LEACHING FIELD TO BE LOCATED WITHIN THE AQUIFER PROTECTION DISTRICT.
7.7104(D) AND (N) W-DISTRICT USE REGULATIONS
WAIVER OF REQUIREMENTS FOR SPECIAL PERMIT FOR USE IN THE W-DISTRICT, IN ORDER TO SUBSTITUTE APPROVAL UNDER THIS COMPREHENSIVE PERMIT.
7.7106 SUBMITTALS
WAIVER OF REQUIREMENTS FOR SPECIAL PERMIT APPLICATIONS TO BE PREPARED AND SUBMITTED TO THE BOARD OF APPEALS, IN ORDER TO PERMIT ONE COMPREHENSIVE SUBMISSION TO THE BOARD TO BE ACTED ON UNDER G.L. C. 40B, §21.
7.7109 PROCEDURES
WAIVER OF REQUIREMENT FOR SPECIAL PERMIT APPLICATIONS TO BE PREPARED AND SUBMITTED TO THE BOARD OF APPEALS IN ORDER TO PERMIT A SINGLE COMPREHENSIVE PERMIT SUBMISSION TO THE BOARD TO BE ACTED UPON UNDER G.L. C.40B, §21.
7.7200 LANDS BORDERING THE W-DISTRICT
WAIVER OF REQUIREMENT FOR SPECIAL PERMIT TO PLACE STRUCTURES WITHIN ONE HUNDRED (100') FEET OF THE W-DISTRICT, IN ORDER TO PERMIT CONSTRUCTION OF WARD ROAD AND A FIRE POND WITHIN 100' OF W-DISTRICT.
8.8000 SITE PLAN APPROVAL & DESIGN REVIEW
WAIVER OF REQUIREMENT FOR SITE PLAN REVIEW BY THE PLANNING BOARD FOR THE CONSTRUCTION OF MULTI-FAMILY STRUCTURES AND PARKING AREAS ASSOCIATED WITH MULTI-FAMILY STRUCTURES.
9.9001(2) BUILDING PERMITS
WAIVER OF REQUIREMENT THAT NO BUILDING PERMIT SHALL BE ISSUED BY THE INSPECTOR OF BUILDINGS WITHOUT THE WRITTEN APPROVAL OF A SITE PLAN BY THE PLANNING BOARD.

WAIVERS FROM TOWN OF BOXBOROUGH REGULATIONS FOR THE WETLAND BYLAW:
SECTION 2.5.3.1 PERFORMANCE STANDARDS
WAIVER OF PROHIBITION OF PARKING LOTS, PERMANENT STRUCTURES, AND SANITARY WASTE DISPOSAL SYSTEMS WITHIN ADJACENT LAND RESOURCE AREA, IN ORDER TO ALLOW PLACEMENT OF THE PROPOSED SANITARY WASTE DISPOSAL SYSTEM, PARKING LOT, ROAD AND OTHER PERMANENT STRUCTURES WITHIN ADJACENT LAND RESOURCE AREA IN ACCORDANCE WITH THE SITE PLAN APPROVED FOR THE PROJECT UNDER THIS COMPREHENSIVE PERMIT.

WAIVERS FROM BOXBOROUGH COMPREHENSIVE PERMIT RULES OF THE ZONING BOARD OF APPEALS:
SECTION 3.02(1) LIST OF REQUESTED EXCEPTIONS
WAIVER OF REQUIREMENT THAT APPLICANT PROVIDES A COMPLETE LIST OF ALL REQUESTED EXCEPTIONS AT THE TIME OF THE INITIAL FILING OF THE APPLICATION IN ORDER TO PERMIT THE LIST TO BE REVISED AS THE PROJECT EVOLVES THROUGH THE HEARING AND APPROVAL PROCESS.

COMMONWEALTH OF MASSACHUSETTS — STEVEN J. LILLIAMS — CIVIL — No. 43119 — REGISTERED PROFESSIONAL ENGINEER

PROFESSIONAL ENGINEER FOR ALLEN & MAJOR ASSOCIATES, INC.

REV	DATE	DESCRIPTION
9.	07/08/2015	ISSUED FOR DEFINITIVE SITE PLAN
8.	06/12/2015	REVISED PER FIRE DEPARTMENT COMMENTS
7.	05/15/2015	ISSUED FOR PERMIT
6.	05/05/2015	ISSUED FOR DEP PERMIT APPROVAL
5.	05/04/2015	REVISED FOR PRICING
4.	03/26/2015	REVISED PER TOWN COMMENTS
3.	03/02/2015	ISSUED FOR MEPA
2.	02/27/2015	REVISED PER TOWN COMMENTS
1.	02/12/2015	ISSUED FOR ZONING BOARD OF APPEALS

APPLICANT:
JPI
3 WEST MAIN STREET, SUITE 203
IRVINGTON, NY 10533

PROJECT:
DEFINITIVE SITE PLAN SET
JEFFERSON AT BEAVER BROOK
BOXBOROUGH, MA

PROJECT NO.	2075-01	DATE:	02-11-2015
SCALE:	1"=40'	DWG. NAME:	C2075-10
DESIGNED BY:	SJL	CHECKED BY:	CMQ

PREPARED BY:
ALLEN & MAJOR ASSOCIATES, INC.
civil & structural engineering • land surveying
environmental consulting • landscape architecture
www.allenmajor.com
100 COMMERCE WAY
P.O. BOX 9118
WOBURN MA 01888-0118
TEL: (781) 935-6889
FAX: (781) 935-2896
WOBURN, MA • LAKEVILLE, MA • MANCHESTER, NH

THIS DRAWING HAS BEEN PREPARED IN ELECTRONIC FORMAT. CLIENT/CLIENT'S REPRESENTATIVE OR CONSULTANT MAY BE PROVIDED COPIES OF DRAWINGS AND SPECIFICATIONS ON MAGNETIC MEDIA FOR HIS/HER INFORMATION AND USE FOR SPECIFIC APPLICATION TO THIS PROJECT. DUE TO THE POTENTIAL THAT THE MAGNETIC INFORMATION MAY BE MODIFIED UNINTENTIONALLY OR OTHERWISE, ALLEN & MAJOR ASSOCIATES, INC. MAY REMOVE ALL INDICATION OF THE DOCUMENT'S AUTHORSHIP ON THE MAGNETIC MEDIA. PRINTED REPRESENTATIONS OF THE DRAWINGS AND SPECIFICATIONS ISSUED SHALL BE THE ONLY RECORD COPIES OF ALLEN & MAJOR ASSOCIATES, INC.'S WORK PRODUCT.

DRAWING TITLE: UTILITY PLAN
SHEET No. C-4B

Copyright©2015 Allen & Major Associates, Inc. All Rights Reserved

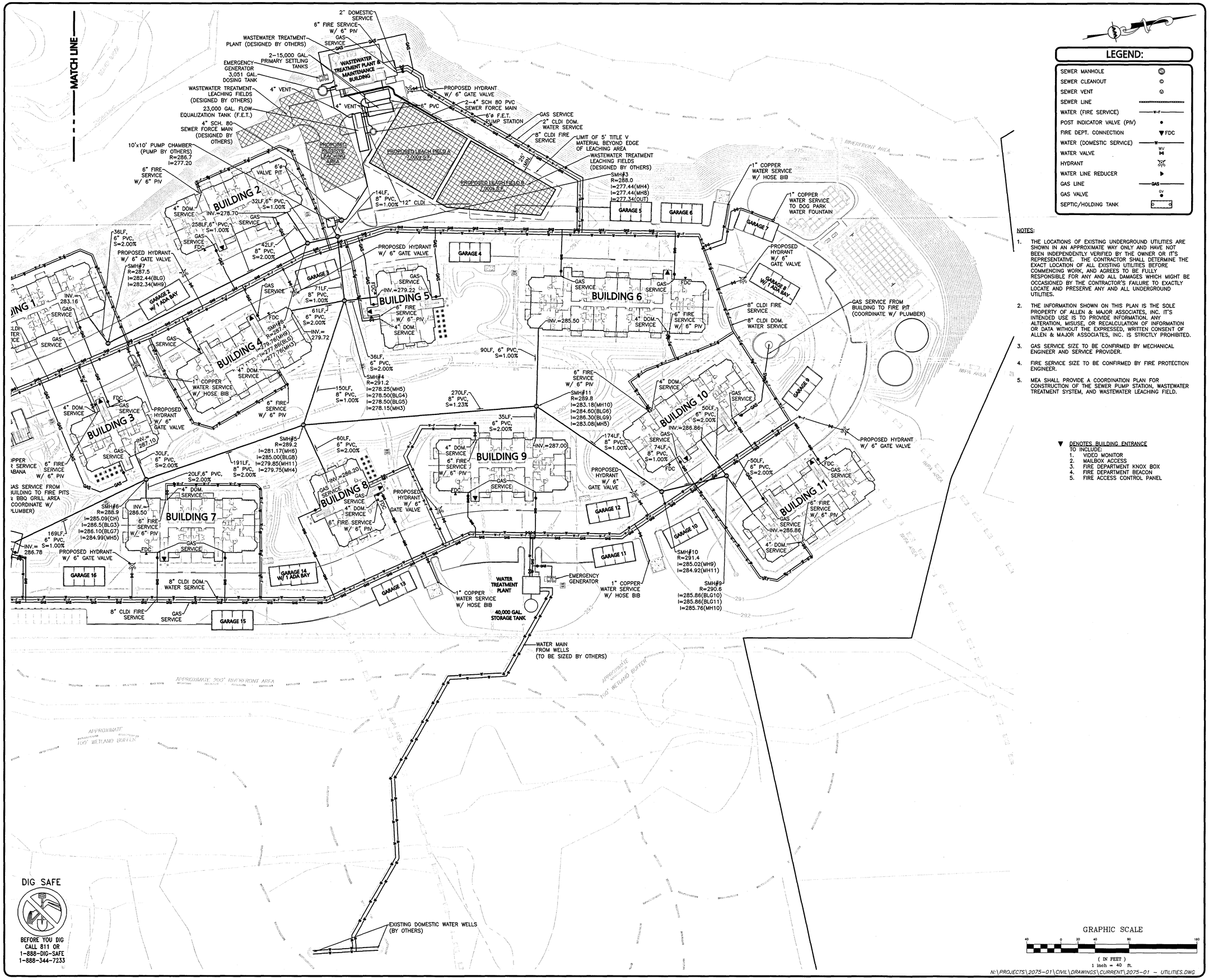

LEGEND:

- SEWER MANHOLE
- SEWER CLEANOUT
- SEWER VENT
- SEWER LINE
- WATER (FIRE SERVICE)
- POST INDICATOR VALVE (PIV)
- FIRE DEPT. CONNECTION
- WATER (DOMESTIC SERVICE)
- WATER VALVE
- HYDRANT
- WATER LINE REDUCER
- GAS LINE
- GAS VALVE
- SEPTIC/HOLDING TANK

NOTES:

1. THE LOCATIONS OF EXISTING UNDERGROUND UTILITIES ARE SHOWN IN AN APPROXIMATE WAY ONLY AND HAVE NOT BEEN INDEPENDENTLY VERIFIED BY THE OWNER OR IT'S REPRESENTATIVE. THE CONTRACTOR SHALL DETERMINE THE EXACT LOCATION OF ALL EXISTING UTILITIES BEFORE COMMENCING WORK, AND AGREES TO BE FULLY RESPONSIBLE FOR ANY AND ALL DAMAGES WHICH MIGHT BE OCCASIONED BY THE CONTRACTOR'S FAILURE TO EXACTLY LOCATE AND PRESERVE ANY AND ALL UNDERGROUND UTILITIES.
2. THE INFORMATION SHOWN ON THIS PLAN IS THE SOLE PROPERTY OF ALLEN & MAJOR ASSOCIATES, INC. IT'S INTENDED USE IS TO PROVIDE INFORMATION. ANY ALTERATION, MISUSE, OR RE-CALCULATION OF INFORMATION OR DATA WITHOUT THE EXPRESSED, WRITTEN CONSENT OF ALLEN & MAJOR ASSOCIATES, INC. IS STRICTLY PROHIBITED.
3. GAS SERVICE SIZE TO BE CONFIRMED BY MECHANICAL ENGINEER AND SERVICE PROVIDER.
4. FIRE SERVICE SIZE TO BE CONFIRMED BY FIRE PROTECTION ENGINEER.
5. MEA SHALL PROVIDE A COORDINATION PLAN FOR CONSTRUCTION OF THE SEWER PUMP STATION, WASTEWATER TREATMENT SYSTEM, AND WASTEWATER LEACHING FIELD.

▼ DENOTES BUILDING ENTRANCE TO INCLUDE:
1. VIDEO MONITOR
2. MAILBOX ACCESS
3. FIRE DEPARTMENT KNOX BOX
4. FIRE DEPARTMENT BEACON
5. FIRE ACCESS CONTROL PANEL

WAIVERS OF TOWN OF BOXBOROUGH ZONING BYLAWS:
4.4003(1) USE REGULATION SCHEDULE
WAIVER TO PERMIT SINGLE-FAMILY AND MULTI-FAMILY ATTACHED RESIDENTIAL USES, NOT OTHERWISE PERMITTED IN THE INDUSTRIAL-COMMERCIAL DISTRICT (I.E., THE PROPOSED TWO (2) SINGLE FAMILY DWELLINGS AND THE PROPOSED 244 APARTMENT UNITS IN ELEVEN (11) MULTI-FAMILY BUILDINGS, FOR A TOTAL OF 246 UNITS)
4.4033 USE REGULATION SCHEDULE
WAIVER TO PERMIT A USE WHICH IS NOT OTHERWISE ACCESSORY TO INDUSTRIAL-COMMERCIAL USES, I.E., A CLUBHOUSE/RENTAL OFFICE.
5.5002 DIMENSIONAL SCHEDULE
WAIVER OF REQUIREMENT FOR A MAXIMUM FLOOR AREA RATIO OF 0.10.
6.6004 SURFACE, CIRCULATION, AND LANDSCAPING REQUIREMENTS
WAIVER OF REQUIREMENT THAT AUTOMOBILE PARKING SPACES SHALL NOT BE LESS THAN 10 FEET BY 20 FEET, IN ORDER TO ALLOW PARKING SPACE OF 9 FEET BY 18 FEET.
6.6103 MULTIPLE BUILDINGS ON ONE LOT
WAIVER OF REQUIREMENT THAT WHERE MORE THAN ONE BUILDING IS PROPOSED TO BE BUILT UPON A LOT, THE PLAN SHALL BE REVIEWED BY THE PLANNING BOARD REGARDING ADEQUACY OF ACCESS TO BUILDINGS, IN ORDER TO SUBSTITUTE THE PERMISSION FROM THE ZONING BOARD OF APPEALS GRANTED UNDER THIS COMPREHENSIVE PERMIT.
6.6109 PRIVATE/COMMON DRIVEWAYS IN THE BUSINESS, BUSINESS 1, OFFICE PARK, TOWN CENTER, AND INDUSTRIAL-COMMERCIAL DISTRICTS
WAIVER OF THE REQUIREMENT THAT PRIVATE/COMMON DRIVEWAYS ARE ALLOWED IN THE IC DISTRICT ONLY BY SPECIAL PERMIT OF THE PLANNING BOARD, IN ORDER TO SUBSTITUTE THE PERMISSION FROM THE ZONING BOARD OF APPEALS UNDER THIS COMPREHENSIVE PERMIT.
7.7004(G) SPECIAL REGULATIONS AQUIFER PROTECTION DISTRICT
WAIVER OF REQUIREMENT THAT THERE BE NO DISPOSAL OF SANITARY WASTE, TO A SUBSURFACE DISPOSAL SYSTEM IN QUANTITIES EXCEEDING 440 GALLONS PER DAY PER ACRE OF AQUIFER PROTECTION DISTRICT CONTAINED WITHIN THE LOT, IN ORDER TO ALLOW QUANTITIES OF UP TO 750 GALLONS PER DAY PER ACRE OF LOT IN THE AQUIFER PROTECTION DISTRICT IN THE EVENT RESERVE LEACHING FIELDS ARE USED.
7.7007(1) DESIGN REQUIREMENTS
WAIVER OF REQUIREMENT THAT WHERE A PORTION OF THE SITE IS LOCATED OUTSIDE OF THE AQUIFER PROTECTION DISTRICT, POTENTIAL POLLUTION SOURCES, SUCH AS ON SITE DISPOSAL SYSTEMS, SHOULD BE LOCATED OUTSIDE THE DISTRICT BOUNDARIES, IN ORDER TO ALLOW RESERVE LEACHING FIELD TO BE LOCATED WITHIN THE AQUIFER PROTECTION DISTRICT.
7.7104(G) AND (H) W-DISTRICT USE REGULATIONS
WAIVER OF REQUIREMENTS FOR SPECIAL PERMIT FOR USE IN THE W-DISTRICT, IN ORDER TO SUBSTITUTE APPROVAL UNDER THIS COMPREHENSIVE PERMIT.
7.7109 SUBMITTALS
WAIVER OF REQUIREMENTS FOR SPECIAL PERMIT APPLICATIONS TO BE PREPARED AND SUBMITTED TO THE BOARD OF APPEALS, IN ORDER TO PERMIT ONE COMPREHENSIVE SUBMISSION TO THE BOARD TO BE ACTED ON UNDER G.L. C. 40B, §21.
7.7109 PROCEDURES
WAIVER OF REQUIREMENT FOR SPECIAL PERMIT APPLICATIONS TO BE PREPARED AND SUBMITTED TO THE BOARD OF APPEALS IN ORDER TO PERMIT A SINGLE COMPREHENSIVE POINT SUBMISSION TO THE BOARD TO BE ACTED UPON UNDER G.L. C.40B, §21.
7.7220 LANDS WITHIN THE W-DISTRICT
WAIVER OF REQUIREMENT FOR SPECIAL PERMIT TO PLACE STRUCTURES WITHIN ONE HUNDRED (100') FEET OF THE W-DISTRICT, IN ORDER TO PERMIT CONSTRUCTION OF ROAD AND FIRE POND WITHIN 100' OF W-DISTRICT.
8.8000 SITE PLAN APPROVAL & DESIGN REVIEW
WAIVER OF REQUIREMENT FOR SITE PLAN REVIEW BY THIS PLANNING BOARD FOR CONSTRUCTION OF MULTI-FAMILY STRUCTURES AND PARKING AREAS ASSOCIATED WITH MULTI-FAMILY STRUCTURES.
8.9001(2) BUILDING PERMIT
WAIVER OF REQUIREMENT THAT NO BUILDING PERMIT SHALL BE ISSUED BY THE INSPECTOR OF BUILDINGS WITHOUT THE WRITTEN APPROVAL OF A SITE PLAN BY THE PLANNING BOARD.

WAIVERS FROM TOWN OF BOXBOROUGH REGULATIONS FOR THE WETLAND STUDIES
SECTION 2.5.3.1 PERFORMANCE STANDARDS
WAIVER OF PROHIBITION OF PARKING LOTS, PERMANENT STRUCTURES, AND SANITARY WASTE DISPOSAL SYSTEMS WITHIN ADJACENT LAND RESOURCE AREA, IN ORDER TO ALLOW THE PLACEMENT OF THE PROPOSED SANITARY WASTE DISPOSAL SYSTEM, PARKING LOT, ROAD AND OTHER PERMANENT STRUCTURES WITHIN THE ADJACENT LAND RESOURCE AREA IN ACCORDANCE WITH THE SITE PLAN APPROVED FOR THE PROJECT UNDER THIS COMPREHENSIVE PERMIT.

WAIVERS FROM BOXBOROUGH COMPREHENSIVE PERMIT RULES OF THE ZONING BOARD OF APPEALS
SECTION 3.02(1) LIST OF REQUESTED EXCEPTIONS
WAIVER OF REQUIREMENT THAT APPLICANT PROVIDES A COMPLETE LIST OF ALL REQUESTED EXCEPTIONS AT THE TIME OF THE INITIAL FILING OF THE APPLICATION IN ORDER TO PERMIT THE LIST TO BE REVISED AS THE PROJECT EVOLVES THROUGH THE HEARING AND APPROVAL PROCESS.

COMMONWEALTH OF MASSACHUSETTS — STEVEN J. WILLIAMS — CIVIL — No.43119 — REGISTERED PROFESSIONAL ENGINEER

PROFESSIONAL ENGINEER FOR ALLEN & MAJOR ASSOCIATES, INC.

REV	DATE	DESCRIPTION
9.	07/08/2015	ISSUED FOR DEFINITIVE SITE PLAN
8.	06/12/2015	REVISED PER FIRE DEPARTMENT COMMENTS
7.	05/15/2015	ISSUED FOR PERMIT
6.	05/05/2015	ISSUED FOR DEP PERMIT APPROVAL
5.	05/04/2015	REVISED FOR PRICING
4.	03/26/2015	REVISED PER TOWN COMMENTS
3.	03/02/2015	ISSUED FOR MEPA
2.	02/27/2015	REVISED PER TOWN COMMENTS
1.	02/12/2015	ISSUED FOR ZONING BOARD OF APPEALS

APPLICANT:
JPI
3 WEST MAIN STREET, SUITE 203
IRVINGTON, NY 10533

PROJECT:
DEFINITIVE SITE PLAN SET
JEFFERSON AT BEAVER BROOK
BOXBOROUGH, MA

PROJECT NO.	2075-01	DATE:	02-11-2015
SCALE:	1"=40'	DWG. NAME:	C2075-10
DESIGNED BY:	SJL	CHECKED BY:	CMQ

PREPARED BY:
ALLEN & MAJOR ASSOCIATES, INC.
civil & structural engineering ◆ land surveying
environmental consulting ◆ landscape architecture
www.allenmajor.com
100 COMMERCE WAY
P.O. BOX 2118
WOBURN MA 01888-0118
TEL: (781) 935-6889
FAX: (781) 935-8896
WOBURN, MA ◆ LAKEVILLE, MA ◆ MANCHESTER, NH

THIS DRAWING HAS BEEN PREPARED IN ELECTRONIC FORMAT. CLIENT/CLIENT'S REPRESENTATIVE OR CONSULTANT MAY BE PROVIDED COPIES OF DRAWINGS AND SPECIFICATIONS ON MAGNETIC MEDIA FOR HIS/HER INFORMATION AND USE FOR SPECIFIC APPLICATION TO THIS PROJECT. DUE TO THE POTENTIAL THAT THE MAGNETIC INFORMATION MAY BE MODIFIED UNINTENTIONALLY OR OTHERWISE, ALLEN & MAJOR ASSOCIATES, INC. MAY REMOVE ALL INDICATION OF THE DOCUMENT'S AUTHORSHIP ON THE MAGNETIC MEDIA. PRINTED REPRESENTATIONS OF THE DRAWINGS AND SPECIFICATIONS ISSUED SHALL BE THE ONLY RECORD COPIES OF ALLEN & MAJOR ASSOCIATES, INC.'S WORK PRODUCT.

DRAWING TITLE: UTILITY PLAN

SHEET No. C-4C

Copyright©2015 Allen & Major Associates, Inc. All Rights Reserved

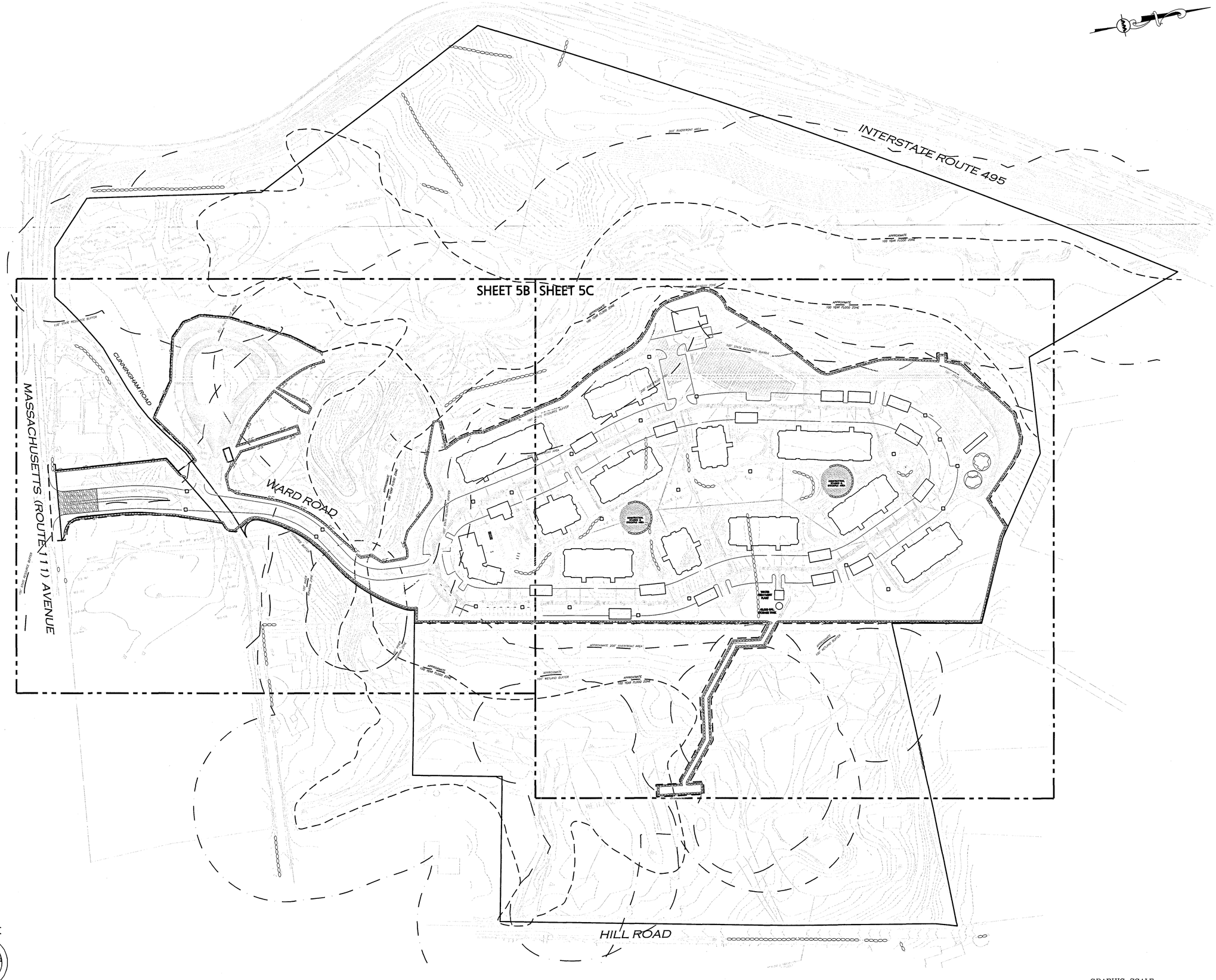

DIG SAFE

BEFORE YOU DIG
CALL 811 OR
1-888-DIG-SAFE
1-888-344-7233

N:\PROJECTS\2075-01\CIVIL\DRAWINGS\CURRENT\2075-01 - EROSION CONTROL.DWG

JPI

WAIVERS OF TOWN OF BOXBOROUGH ZONING BYLAWS:

4.4003(1) USE REGULATION SCHEDULE
WAIVER TO PERMIT SINGLE-FAMILY AND MULTI-FAMILY ATTACHED RESIDENTIAL USES NOT OTHERWISE PERMITTED IN THE INDUSTRIAL/COMMERCIAL DISTRICT (I.E. THE PROPOSED TWO (2) SINGLE FAMILY DWELLINGS AND THE PROPOSED 244 APARTMENT UNITS IN ELEVEN (11) MULTI-FAMILY BUILDINGS, FOR A TOTAL OF 246 UNITS)

4.4033 USE REGULATION SCHEDULE
WAIVER TO PERMIT A USE WHICH IS NOT OTHERWISE ACCESSORY TO INDUSTRIAL-COMMERCIAL USES, I.E., A CLUBHOUSE/RENTAL OFFICE.

5.5002 DIMENSIONAL SCHEDULE
WAIVER OF REQUIREMENT FOR A MAXIMUM FLOOR AREA RATIO OF 0.10.

6.6004 SURFACE, CIRCULATION, AND LANDSCAPING REQUIREMENTS
WAIVER OF REQUIREMENT THAT AUTOMOBILE PARKING SPACES SHALL NOT BE LESS THAN 10 FEET BY 20 FEET, IN ORDER TO ALLOW PARKING SPACE OF 9 FEET BY 18 FEET.

6.6103 MULTIPLE BUILDINGS ON ONE LOT
WAIVER OF REQUIREMENT THAT WHERE MORE THAN ONE BUILDING IS PROPOSED TO BE BUILT UPON A LOT, THE PLAN SHALL BE REVIEWED BY THE PLANNING BOARD REGARDING ADEQUACY OF ACCESS TO BUILDINGS, IN ORDER TO SUBSTITUTE THE PERMISSION FROM THE ZONING BOARD OF APPEALS GRANTED UNDER THIS COMPREHENSIVE PERMIT.

6.6105 PRIVATE/COMMON DRIVEWAYS IN THE BUSINESS, BUSINESS 1, OFFICE PARK, TOWN CENTER, AND INDUSTRIAL-COMMERCIAL DISTRICTS
WAIVER OF THE REQUIREMENT THAT PRIVATE/COMMON DRIVEWAYS ARE ALLOWED IN THE DISTRICT ONLY BY SPECIAL PERMIT OF THE PLANNING BOARD, IN ORDER TO SUBSTITUTE THE PERMISSION FROM THE ZONING BOARD OF APPEALS UNDER THIS COMPREHENSIVE PERMIT.

7.7004(9) SPECIAL REGULATIONS AQUIFER PROTECTION DISTRICT
WAIVER OF REQUIREMENT THAT THERE BE NO DISPOSAL OF SANITARY WASTE TO A SUBSURFACE DISPOSAL SYSTEM IN QUANTITIES EXCEEDING 440 GALLONS PER DAY PER ACRE OF AQUIFER PROTECTION DISTRICT CONTAINED WITHIN THE LOT, IN ORDER TO ALLOW QUANTITIES OF UP TO 750 GALLONS PER DAY PER ACRE OF THE SITE IN THE AQUIFER PROTECTION DISTRICT IN THE EVENT RESERVE LEACHING FIELDS ARE USED.

7.7007(1) DESIGN REQUIREMENTS
WAIVER OF REQUIREMENT THAT WHERE A PORTION OF THE SITE IS LOCATED OUTSIDE OF THE AQUIFER PROTECTION DISTRICT, POTENTIAL POLLUTION SOURCES, SUCH AS ON-SITE DISPOSAL SYSTEMS, SHOULD BE LOCATED OUTSIDE THE DISTRICT BOUNDARIES, IN ORDER TO ALLOW RESERVE LEACHING FIELD TO BE LOCATED WITHIN THE AQUIFER PROTECTION DISTRICT.

7.7104(D) AND (H) W-DISTRICT USE REGULATIONS
WAIVER OF REQUIREMENTS FOR SPECIAL PERMIT FOR USE IN THE W-DISTRICT, IN ORDER TO SUBSTITUTE APPROVAL UNDER THIS COMPREHENSIVE PERMIT.

7.7106 SUBMITTALS
WAIVER OF REQUIREMENTS FOR SPECIAL PERMIT APPLICATIONS TO BE PREPARED AND SUBMITTED TO THE BOARD OF APPEALS, IN ORDER TO PERMIT ONE COMPREHENSIVE SUBMISSION TO THE BOARD TO BE ACTED ON UNDER G.L. C. 40B, §21.

7.7109 PROCEDURES
WAIVER OF REQUIREMENT FOR SPECIAL PERMIT APPLICATIONS TO BE PREPARED AND SUBMITTED TO THE BOARD OF APPEALS IN ORDER TO PERMIT A SINGLE COMPREHENSIVE PERMIT SUBMISSION TO THE BOARD TO BE ACTED UPON UNDER G.L. C.40B, §21.

7.7200 LAND BORDERING THE W-DISTRICT
WAIVER OF REQUIREMENT FOR SPECIAL PERMIT TO PLACE STRUCTURES WITHIN ONE HUNDRED (100') FEET OF THE W-DISTRICT IN ORDER TO PERMIT CONSTRUCTION OF WARD ROAD AND A FIRE POND WITHIN 100' OF W-DISTRICT.

8.8000 SITE PLAN APPROVAL & DESIGN REVIEW
WAIVER OF REQUIREMENT FOR SITE PLAN REVIEW BY THE PLANNING BOARD FOR THE CONSTRUCTION OF MULTI-FAMILY STRUCTURES AND PARKING AREAS ASSOCIATED WITH MULTI-FAMILY STRUCTURES.

9.9001(2) BUILDING PERMITS
WAIVER OF REQUIREMENT THAT NO BUILDING PERMIT SHALL BE ISSUED BY THE INSPECTOR OF BUILDINGS WITHOUT THE WRITTEN APPROVAL OF A SITE PLAN BY THE PLANNING BOARD.

WAIVERS FROM TOWN OF BOXBOROUGH REGULATIONS FOR THE WETLAND BYLAW:

SECTION 2.5.3.1 PERFORMANCE STANDARDS
WAIVER OF PROHIBITION OF PARKING LOTS, PERMANENT STRUCTURES, AND SANITARY WASTE DISPOSAL SYSTEMS WITHIN ADJACENT LAND RESOURCE AREA, IN ORDER TO ALLOW THE PLACEMENT OF THE PROPOSED SANITARY WASTE DISPOSAL SYSTEM, PARKING LOT, ROAD AND OTHER PERMANENT STRUCTURES WITHIN THE ADJACENT LAND RESOURCE AREA IN ACCORDANCE WITH THE SITE PLAN APPROVED FOR THE PROJECT UNDER THIS COMPREHENSIVE PERMIT.

WAIVERS FROM BOXBOROUGH COMPREHENSIVE PERMIT RULES OF THE ZONING BOARD OF APPEALS:

SECTION 3.03(1) LIST OF REQUESTED EXCEPTIONS
WAIVER OF REQUIREMENT THAT APPLICANT PROVIDES A COMPLETE LIST OF ALL REQUESTED EXCEPTIONS AT THE TIME OF THE INITIAL FILING OF THE APPLICATION IN ORDER TO PERMIT THE LIST TO BE REVISED AS THE PROJECT EVOLVES THROUGH THE HBD AND APPROVAL PROCESS.

PROFESSIONAL ENGINEER FOR
ALLEN & MAJOR ASSOCIATES, INC.

REV	DATE	DESCRIPTION
9.	07/08/2015	ISSUED FOR DEFINITIVE SITE PLAN
8.	06/12/2015	REVISED PER FIRE DEPARTMENT COMMENTS
7.	05/15/2015	ISSUED FOR PERMIT
6.	05/05/2015	ISSUED FOR DEP PERMIT APPROVAL
5.	05/04/2015	REVISED FOR PRICING
4.	03/26/2015	REVISED PER TOWN COMMENTS
3.	03/02/2015	ISSUED FOR MEPA
2.	02/27/2015	REVISED PER TOWN COMMENTS
1.	02/12/2015	ISSUED FOR ZONING BOARD OF APPEALS

APPLICANT:
JPI
3 WEST MAIN STREET, SUITE 203
IRVINGTON, NY 10533

PROJECT:
DEFINITIVE SITE PLAN SET
JEFFERSON AT BEAVER BROOK
BOXBOROUGH, MA

PROJECT NO.	2075-01	DATE:	02-11-2015
SCALE:	1"=80'	DWG. NAME:	C2075-10
DESIGNED BY:	SJL	CHECKED BY:	CMQ

PREPARED BY:
ALLEN & MAJOR ASSOCIATES, INC.
civil & structural engineering ♦ land surveying
environmental consulting ♦ landscape architecture
www.allenmajor.com
100 COMMERCE WAY
P.O. BOX 9118
WOBURN MA 01888-0118
TEL: (781) 935-6889
FAX: (781) 935-2896
WOBURN, MA ♦ LAKEVILLE, MA ♦ MANCHESTER, NH

THIS DRAWING HAS BEEN PREPARED IN ELECTRONIC FORMAT. CLIENT/CLIENT'S REPRESENTATIVE OR CONSULTANT MAY BE PROVIDED COPIES OF DRAWINGS AND SPECIFICATIONS ON MAGNETIC MEDIA FOR HIS/HER INFORMATION AND USE FOR SPECIFIC APPLICATION TO THIS PROJECT. DUE TO THE POTENTIAL THAT THE MAGNETIC INFORMATION MAY BE MODIFIED UNINTENTIONALLY OR OTHERWISE, ALLEN & MAJOR ASSOCIATES, INC. MAY REMOVE ALL INDICATION OF THE DOCUMENT'S AUTHORSHIP ON THE MAGNETIC MEDIA. PRINTED REPRESENTATIONS OF THE DRAWINGS AND SPECIFICATIONS ISSUED SHALL BE THE ONLY RECORD COPIES OF ALLEN & MAJOR ASSOCIATES, INC.'S WORK PRODUCT.

DRAWING TITLE:
EROSION CONTROL PLAN

SHEET No.
C-5A

Copyright ©2015 Allen & Major Associates, Inc.
All Rights Reserved

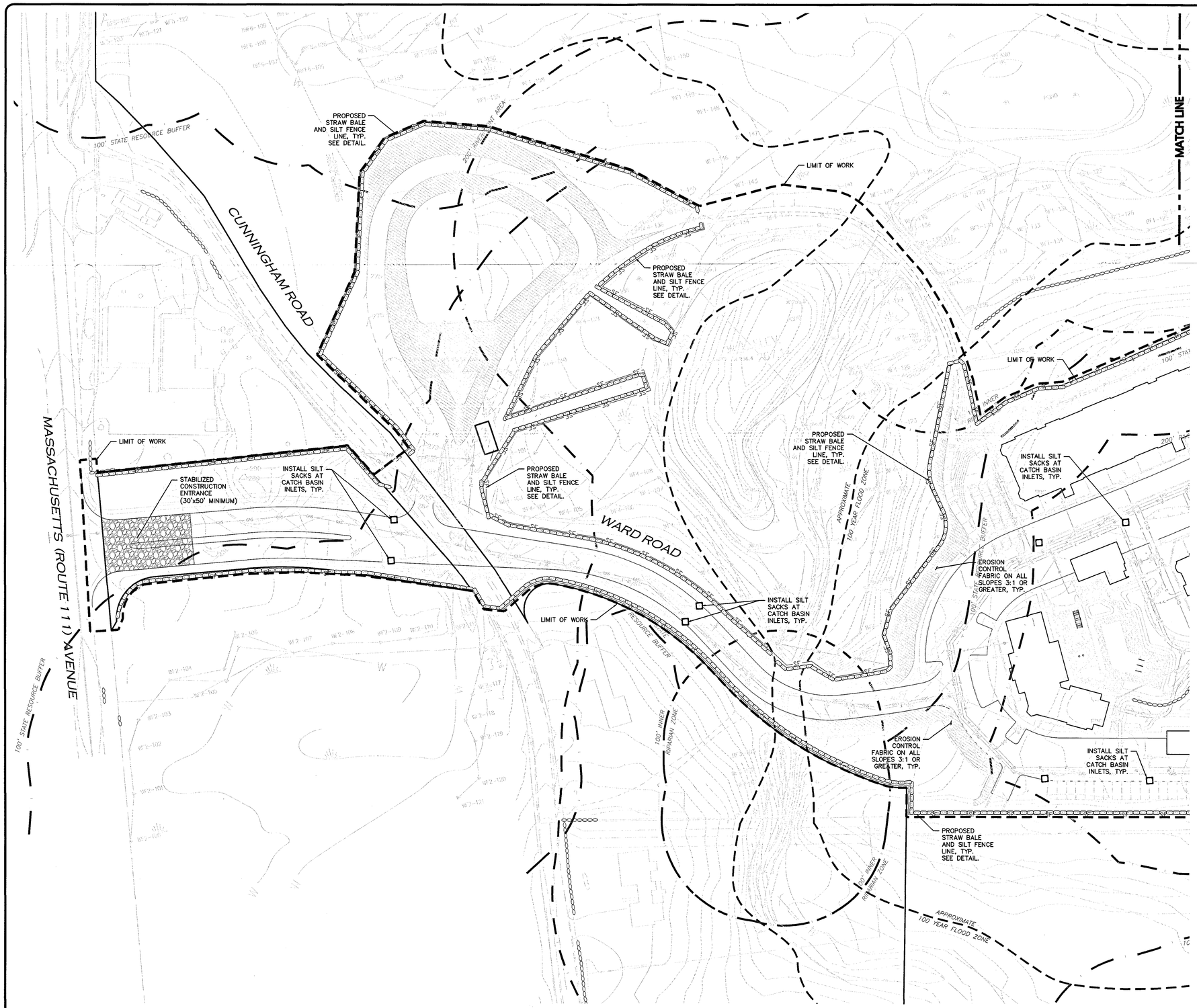

LEGEND:

- SILT FENCE —SF—
- STRAWBALE & SILT FENCE LINE
- EROSION CONTROL FABRIC
- SILT SACK
- STABILIZED CONST. ENTRANCE
- STOCKPILE/CONSTRUCTION STAGING AREA
- LIMIT OF WORK LINE

NOTES:

1. THE LOCATIONS OF EXISTING UNDERGROUND UTILITIES ARE SHOWN IN AN APPROXIMATE WAY ONLY AND HAVE NOT BEEN INDEPENDENTLY VERIFIED BY THE OWNER OR IT'S REPRESENTATIVE. THE CONTRACTOR SHALL DETERMINE THE EXACT LOCATION OF ALL EXISTING UTILITIES BEFORE COMMENCING WORK, AND AGREES TO BE FULLY RESPONSIBLE FOR ANY AND ALL DAMAGES WHICH MIGHT BE OCCASIONED BY THE CONTRACTOR'S FAILURE TO EXACTLY LOCATE AND PRESERVE ANY AND ALL UNDERGROUND UTILITIES.
2. THE INFORMATION SHOWN ON THIS PLAN IS THE SOLE PROPERTY OF ALLEN & MAJOR ASSOCIATES, INC. IT'S INTENDED USE IS TO PROVIDE INFORMATION. ANY ALTERATION, MISUSE, OR RECALCULATION OF INFORMATION OR DATA WITHOUT THE EXPRESSED, WRITTEN CONSENT OF ALLEN & MAJOR ASSOCIATES, INC. IS STRICTLY PROHIBITED.
3. THE CONTRACTOR SHALL CONTACT "DIGSAFE" AND THE TOWN OF BOXBOROUGH DEPARTMENT OF PUBLIC WORKS AT LEAST 72 HOURS PRIOR TO ANY EXCAVATION WORK TO REQUEST THE LOCATION OF THE EXISTING UTILITIES.

   DIGSAFE: 1-800-344-7233
   BOXBOROUGH DEPT. OF PUBLIC WORKS: 1-978-264-1764

4. SEE THE ABBREVIATIONS AND NOTES PLAN, SHEET ABB-2 FOR EROSION CONTROL NOTES.
5. CONTRACTOR TO DE-WATER ONSITE ONLY. NO DE-WATERING CAN OUTLET TO EXISTING DRAINAGE OR TO TOWN OF BOXBOROUGH STREET DRAINAGE.
6. ALL TREES WITHIN THE LIMIT OF WORK SHALL BE REMOVED.
7. CONTRACTOR TO CAREFULLY SALVAGE EXISTING FIELDSTONE RETAINING WALLS WHICH WILL BE DISTURBED BY THE PROPOSED PROJECT. SALVAGED STONES TO BE SAVED IN AN ONSITE LOCATION WHICH WILL NOT BE DISTURBED BY THE PROPOSED CONSTRUCTION ACTIVITIES. SALVAGED STONES TO BE REUSED AS PROPOSED FREESTANDING FIELDSTONE WALLS ONSITE. SEE LANDSCAPE PLAN FOR PROPOSED LOCATION OF FIELDSTONE WALLS.

GRAPHIC SCALE

40 0 20 40 80 160

(IN FEET)
1 inch = 40 ft.

N:\PROJECTS\2075-01\CIVIL\DRAWINGS\CURRENT\2075-01 - EROSION CONTROL.DWG

DIG SAFE

BEFORE YOU DIG
CALL 811 OR
1-888-DIG-SAFE
1-888-344-7233

JPI

WAIVERS OF TOWN OF BOXBOROUGH ZONING BYLAWS:
4.4032(1) USE REGULATION SCHEDULE
WAIVER TO PERMIT SINGLE-FAMILY AND MULTI-FAMILY ATTACHED RESIDENTIAL USES NOT OTHERWISE PERMITTED IN THE INDUSTRIAL/COMMERCIAL DISTRICT (I.E. THE PROPOSED TWO (2) SINGLE FAMILY DWELLINGS AND THE PROPOSED 244 APARTMENT UNITS IN ELEVEN (11) MULTI-FAMILY BUILDINGS, FOR A TOTAL OF 246 UNITS)
4.4033 USE REGULATION SCHEDULE
WAIVER TO PERMIT A USE WHICH IS NOT OTHERWISE ACCESSORY TO INDUSTRIAL-COMMERCIAL USES, I.E., A CLUBHOUSE/RENTAL OFFICE.
5.5002 DIMENSIONAL SCHEDULE
WAIVER OF REQUIREMENT FOR A MAXIMUM FLOOR AREA RATIO OF 0.10.
6.6004 SURFACE, CIRCULATION, AND LANDSCAPING REQUIREMENTS
WAIVER OF REQUIREMENT THAT AUTOMOBILE PARKING SPACES SHALL NOT BE LESS THAN 10 FEET BY 20 FEET, IN ORDER TO ALLOW PARKING SPACE OF 9 FEET BY 18 FEET.
6.6103 MULTIPLE BUILDINGS ON ONE LOT
WAIVER OF REQUIREMENT THAT WHERE MORE THAN ONE BUILDING IS PROPOSED TO BE BUILT UPON A LOT, THE PLAN SHALL BE REVIEWED BY THE PLANNING BOARD REGARDING ADEQUACY OF ACCESS TO BUILDINGS, IN ORDER TO SUBSTITUTE THE PERMISSION FROM THE ZONING BOARD OF APPEALS GRANTED UNDER THIS COMPREHENSIVE PERMIT.
6.6105 PRIVATE/COMMON DRIVEWAYS IN THE BUSINESS, BUSINESS 1, OFFICE PARK, TOWN CENTER, AND INDUSTRIAL-COMMERCIAL DISTRICTS
WAIVER OF THE REQUIREMENT THAT PRIVATE/COMMON DRIVEWAYS ARE ALLOWED IN THE IC DISTRICT ONLY BY SPECIAL PERMIT OF THE PLANNING BOARD, IN ORDER TO SUBSTITUTE THE PERMISSION FROM THE ZONING BOARD OF APPEALS UNDER THIS COMPREHENSIVE PERMIT.
7.7004(G) SPECIAL REGULATIONS AQUIFER PROTECTION DISTRICT
WAIVER OF REQUIREMENT THAT THERE BE NO DISPOSAL OF SANITARY WASTE TO A SUBSURFACE DISPOSAL SYSTEM IN QUANTITIES EXCEEDING 440 GALLONS PER DAY PER ACRE OF AQUIFER PROTECTION DISTRICT CONTAINED WITHIN THE LOT, IN ORDER TO ALLOW QUANTITIES OF UP TO 1750 GALLONS PER DAY PER ACRE OF THE SITE IN THE AQUIFER PROTECTION DISTRICT IN THE EVENT RESERVE LEACHING FIELDS ARE USED.
7.7007(1) DESIGN REQUIREMENTS
WAIVER OF REQUIREMENT THAT WHERE A PORTION OF THE SITE IS LOCATED OUTSIDE OF THE AQUIFER PROTECTION DISTRICT, POTENTIAL POLLUTION SOURCES, SUCH AS ON SITE DISPOSAL SYSTEMS, SHALL BE LOCATED OUTSIDE THE DISTRICT BOUNDARIES, IN ORDER TO ALLOW RESERVE LEACHING FIELDS TO BE LOCATED WITHIN THE AQUIFER PROTECTION DISTRICT.
7.7104(G) AND (H) W-DISTRICT USE REGULATIONS
WAIVER OF REQUIREMENTS FOR SPECIAL PERMIT FOR USE IN THE W-DISTRICT, IN ORDER TO SUBSTITUTE APPROVAL UNDER THIS COMPREHENSIVE PERMIT.
7.7106 SUBMITTALS
WAIVER OF REQUIREMENTS FOR SPECIAL PERMIT APPLICATIONS TO BE PREPARED AND SUBMITTED TO THE BOARD OF APPEALS, IN ORDER TO PERMIT ONE COMPREHENSIVE SUBMISSION TO THE BOARD TO BE ACTED ON UNDER G.L. C. 40B, §21.
7.7109 PROCEDURES
WAIVER OF REQUIREMENT FOR SPECIAL PERMIT APPLICATIONS TO BE PREPARED AND SUBMITTED TO THE BOARD OF APPEALS IN ORDER TO PERMIT A SINGLE COMPREHENSIVE PERMIT SUBMISSION TO THE BOARD TO BE ACTED UPON UNDER G.L. C.40B, §21.
7.7200 LANDS BORDERING THE W-DISTRICT
WAIVER OF REQUIREMENT FOR SPECIAL PERMIT TO PLACE STRUCTURES WITHIN ONE HUNDRED (100') FEET OF THE W-DISTRICT, IN ORDER TO PERMIT CONSTRUCTION OF WARD ROAD AND A FIRE POND WITHIN 100' OF W-DISTRICT.
8.8000 SITE PLAN APPROVAL & DESIGN REVIEW
WAIVER OF REQUIREMENT FOR SITE PLAN REVIEW BY THE PLANNING BOARD, FOR THE CONSTRUCTION OF MULTI-FAMILY STRUCTURES AND PARKING AREAS ASSOCIATED WITH MULTI-FAMILY STRUCTURES.
9.9001(D) BUILDING PERMITS
WAIVER OF REQUIREMENT THAT NO BUILDING PERMIT SHALL BE ISSUED BY THE INSPECTOR OF BUILDINGS WITHOUT THE WRITTEN APPROVAL OF A SITE PLAN BY THE PLANNING BOARD.

WAIVERS FROM TOWN OF BOXBOROUGH REGULATIONS FOR THE WETLAND BYLAW:
SECTION 2.5.3.1 PERFORMANCE STANDAROS
WAIVER OF PROHIBITION OF PARKING LOTS, PERMANENT STRUCTURES, AND SANITARY WASTE DISPOSAL SYSTEMS WITHIN ADJACENT LAND RESOURCE AREA, IN ORDER TO ALLOW THE PLACEMENT OF THE PROPOSED SANITARY WASTE DISPOSAL SYSTEM, PARKING LOT, ROAD AND OTHER PERMANENT STRUCTURES WITHIN THE ADJACENT LAND RESOURCE AREA IN ACCORDANCE WITH THE SITE PLAN APPROVED FOR THE PROJECT UNDER THIS COMPREHENSIVE PERMIT.

WAIVERS FROM BOXBOROUGH COMPREHENSIVE PERMIT RULES OF THE ZONING BOARD OF APPEALS:
SECTION 3.02(1) LIST OF REQUESTED EXCEPTIONS
WAIVER OF REQUIREMENT THAT APPLICANT PROVIDES A COMPLETE LIST OF ALL REQUESTED EXCEPTIONS AT THE TIME OF THE INITIAL FILING OF THE APPLICATION IN ORDER TO PERMIT THE LIST TO BE REVISED AS THE PROJECT EVOLVES THROUGH THE HEARING AND APPROVAL PROCESS.

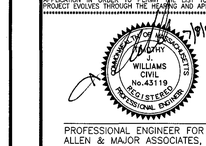

PROFESSIONAL ENGINEER FOR
ALLEN & MAJOR ASSOCIATES, INC.

REV	DATE	DESCRIPTION
9.	07/08/2015	ISSUED FOR DEFINITIVE SITE PLAN
8.	06/12/2015	REVISED PER FIRE DEPARTMENT COMMENTS
7.	05/15/2015	ISSUED FOR PERMIT
6.	05/05/2015	ISSUED FOR DEP PERMIT APPROVAL
5.	05/04/2015	REVISED FOR PRICING
4.	03/26/2015	REVISED PER TOWN COMMENTS
3.	03/02/2015	ISSUED FOR MEPA
2.	02/27/2015	REVISED PER TOWN COMMENTS
1.	02/12/2015	ISSUED FOR ZONING BOARD OF APPEALS

APPLICANT:
JPI
3 WEST MAIN STREET, SUITE 203
IRVINGTON, NY 10533

PROJECT:
DEFINITIVE SITE PLAN SET
JEFFERSON AT BEAVER BROOK
BOXBOROUGH, MA

PROJECT NO.	2075-01	DATE:	02-11-2015
SCALE:	1"=40'	DWG. NAME:	C2075-10
DESIGNED BY:	SJL	CHECKED BY:	CMQ

PREPARED BY:

ALLEN & MAJOR ASSOCIATES, INC.
civil & structural engineering ◆ land surveying
environmental consulting ◆ landscape architecture
www.allenmajor.com
100 COMMERCE WAY
P.O. BOX 2118
WOBURN MA 01888-0118
TEL: (781) 935-6889
FAX: (781) 935-2896
WOBURN, MA ◆ LAKEVILLE, MA ◆ MANCHESTER, NH

THIS DRAWING HAS BEEN PREPARED IN ELECTRONIC FORMAT. CLIENT/CLIENT'S REPRESENTATIVE OR CONSULTANT MAY BE PROVIDED COPIES OF DRAWINGS AND SPECIFICATIONS ON MAGNETIC MEDIA FOR HIS/HER INFORMATION AND USE FOR SPECIFIC APPLICATION TO THIS PROJECT. DUE TO THE POTENTIAL THAT THE MAGNETIC INFORMATION MAY BE MODIFIED UNINTENTIONALLY OR OTHERWISE, ALLEN & MAJOR ASSOCIATES, INC. MAY REMOVE ALL INDICATION OF THE DOCUMENT'S AUTHORSHIP ON THE MAGNETIC MEDIA. PRINTED REPRESENTATIONS OF THE DRAWINGS AND SPECIFICATIONS ISSUED SHALL BE THE ONLY RECORD COPIES OF ALLEN & MAJOR ASSOCIATES, INC.'S WORK PRODUCT.

DRAWING TITLE: EROSION CONTROL PLAN

SHEET No. C-5B

Copyright ©2015 Allen & Major Associates, Inc.
All Rights Reserved

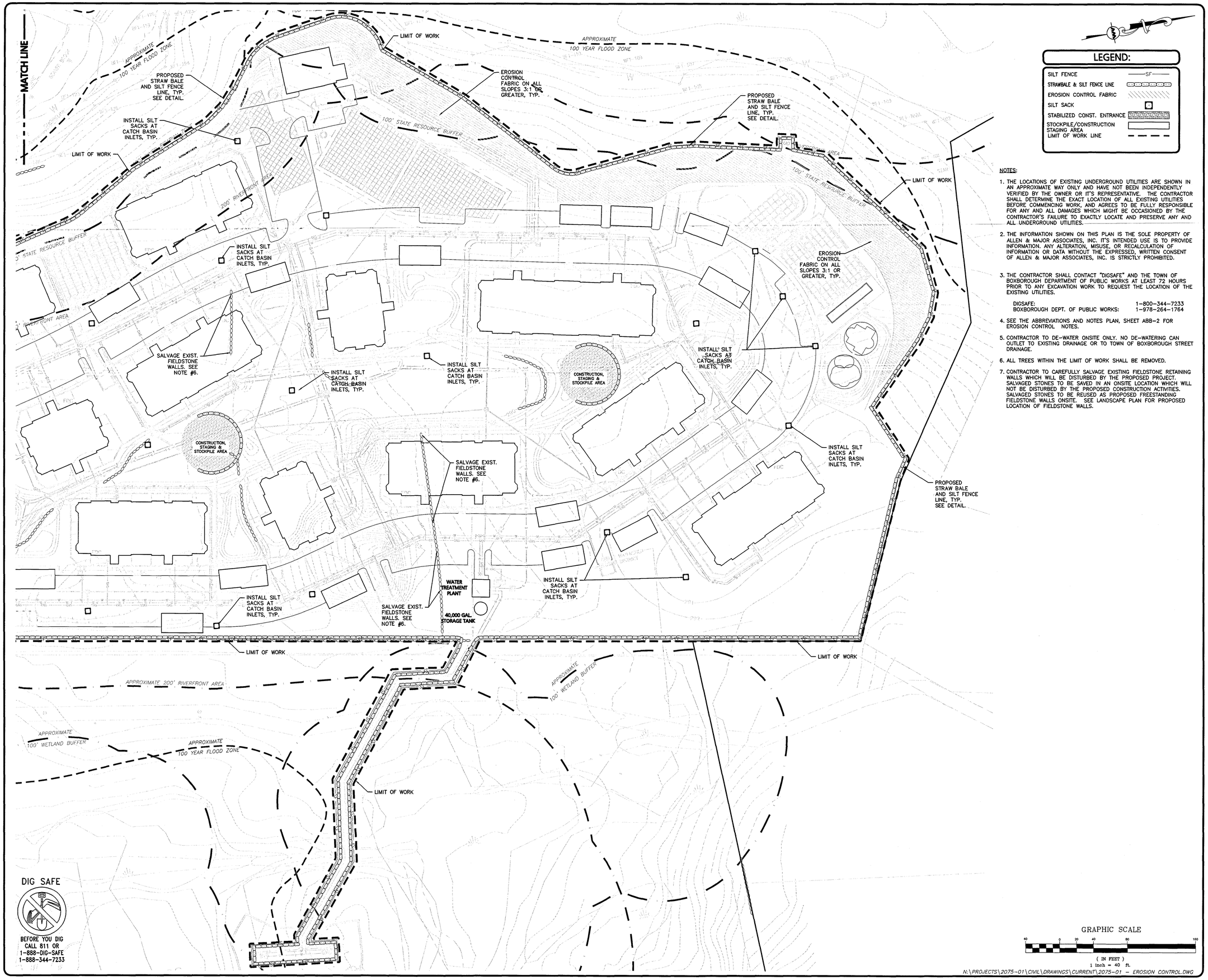

LEGEND:

- SILT FENCE —SF—
- STRAWBALE & SILT FENCE LINE
- EROSION CONTROL FABRIC
- SILT SACK
- STABILIZED CONST. ENTRANCE
- STOCKPILE/CONSTRUCTION STAGING AREA
- LIMIT OF WORK LINE

NOTES:

1. THE LOCATIONS OF EXISTING UNDERGROUND UTILITIES ARE SHOWN IN AN APPROXIMATE WAY ONLY AND HAVE NOT BEEN INDEPENDENTLY VERIFIED BY THE OWNER OR IT'S REPRESENTATIVE. THE CONTRACTOR SHALL DETERMINE THE EXACT LOCATION OF ALL EXISTING UTILITIES BEFORE COMMENCING WORK, AND AGREES TO BE FULLY RESPONSIBLE FOR ANY AND ALL DAMAGES WHICH MIGHT BE OCCASIONED BY THE CONTRACTOR'S FAILURE TO EXACTLY LOCATE AND PRESERVE ANY AND ALL UNDERGROUND UTILITIES.
2. THE INFORMATION SHOWN ON THIS PLAN IS THE SOLE PROPERTY OF ALLEN & MAJOR ASSOCIATES, INC. IT'S INTENDED USE IS TO PROVIDE INFORMATION. ANY ALTERATION, MISUSE, OR RECALCULATION OF INFORMATION OR DATA WITHOUT THE EXPRESSED, WRITTEN CONSENT OF ALLEN & MAJOR ASSOCIATES, INC. IS STRICTLY PROHIBITED.
3. THE CONTRACTOR SHALL CONTACT "DIGSAFE" AND THE TOWN OF BOXBOROUGH DEPARTMENT OF PUBLIC WORKS AT LEAST 72 HOURS PRIOR TO ANY EXCAVATION WORK TO REQUEST THE LOCATION OF THE EXISTING UTILITIES.

   DIGSAFE: 1-800-344-7233
   BOXBOROUGH DEPT. OF PUBLIC WORKS: 1-978-264-1764
4. SEE THE ABBREVIATIONS AND NOTES PLAN, SHEET ABB-2 FOR EROSION CONTROL NOTES.
5. CONTRACTOR TO DE-WATER ONSITE ONLY. NO DE-WATERING CAN OUTLET TO EXISTING DRAINAGE OR TO TOWN OF BOXBOROUGH STREET DRAINAGE.
6. ALL TREES WITHIN THE LIMIT OF WORK SHALL BE REMOVED.
7. CONTRACTOR TO CAREFULLY SALVAGE EXISTING FIELDSTONE RETAINING WALLS WHICH WILL BE DISTURBED BY THE PROPOSED PROJECT. SALVAGED STONES TO BE SAVED IN AN ONSITE LOCATION WHICH WILL NOT BE DISTURBED BY THE PROPOSED CONSTRUCTION ACTIVITIES. SALVAGED STONES TO BE REUSED AS PROPOSED FREESTANDING FIELDSTONE WALLS ONSITE. SEE LANDSCAPE PLAN FOR PROPOSED LOCATION OF FIELDSTONE WALLS.

DIG SAFE
BEFORE YOU DIG CALL 811 OR 1-888-DIG-SAFE 1-888-344-7233

GRAPHIC SCALE
40 0 20 40 80 160
(IN FEET)
1 inch = 40 ft.

N:\PROJECTS\2075-01\CIVIL\DRAWINGS\CURRENT\2075-01 - EROSION CONTROL.DWG

JPI

WAIVERS OF TOWN OF BOXBOROUGH ZONING BYLAWS:
4.4033(1) USE REGULATION SCHEDULE
WAIVER TO PERMIT SINGLE-FAMILY AND MULTI-FAMILY ATTACHED RESIDENTIAL USES NOT OTHERWISE PERMITTED IN THE INDUSTRIAL COMMERCIAL DISTRICT (I.E. THE PROPOSED TWO (2) SINGLE FAMILY DWELLINGS AND THE PROPOSED 244 APARTMENT UNITS IN ELEVEN (11) MULTI-FAMILY BUILDINGS, FOR A TOTAL OF 246 UNITS)
4.4033 USE REGULATION SCHEDULE
WAIVER TO PERMIT A USE WHICH IS NOT OTHERWISE ACCESSORY TO INDUSTRIAL-COMMERCIAL USES, I.E., A CLUBHOUSE/RENTAL OFFICE.
5.5002 DIMENSIONAL SCHEDULE
WAIVER OF REQUIREMENT FOR A MAXIMUM FLOOR AREA RATIO OF 0.10.
6.6004 SURFACE, CIRCULATION, AND LANDSCAPING REQUIREMENTS
WAIVER OF REQUIREMENT THAT AUTOMOBILE PARKING SPACES SHALL NOT BE LESS THAN 10 FEET BY 20 FEET, IN ORDER TO ALLOW PARKING SPACE OF 9 FEET BY 18 FEET.
6.6103 MULTIPLE BUILDINGS ON ONE LOT
WAIVER OF REQUIREMENT THAT WHERE MORE THAN ONE BUILDING IS PROPOSED TO BE BUILT UPON A LOT, THE PLAN SHALL BE REVIEWED BY THE PLANNING BOARD REGARDING ADEQUACY OF ACCESS TO BUILDINGS, IN ORDER TO SUBSTITUTE THE PERMISSION FROM THE ZONING BOARD OF APPEALS GRANTED UNDER THIS COMPREHENSIVE PERMIT.
6.6106 PRIVATE/COMMON DRIVEWAYS IN THE BUSINESS, BUSINESS 1, OFFICE PARK, TECHNOLOGY CENTER, AND INDUSTRIAL-COMMERCIAL DISTRICTS
WAIVER OF THE REQUIREMENT THAT PRIVATE/COMMON DRIVEWAYS ARE ALLOWED IN THE IC DISTRICT ONLY BY SPECIAL PERMIT OF THE PLANNING BOARD, IN ORDER TO SUBSTITUTE THE PERMISSION FROM THE ZONING BOARD OF APPEALS UNDER THIS COMPREHENSIVE PERMIT.
7.7004(G) SPECIAL REGULATIONS AQUIFER PROTECTION DISTRICT
WAIVER OF REQUIREMENT THAT THERE BE NO DISPOSAL OF SANITARY WASTE TO A SUBSURFACE DISPOSAL SYSTEM IN QUANTITIES EXCEEDING 440 GALLONS PER DAY PER ACRE OF AQUIFER PROTECTION DISTRICT CONTAINED WITHIN THE LOT, IN ORDER TO ALLOW QUANTITIES OF UP TO 750 GALLONS PER DAY PER ACRE OF THE SITE IN THE AQUIFER PROTECTION DISTRICT IN THE EVENT RESERVE LEACHING FIELDS ARE USED.
7.7007(1) DESIGN REQUIREMENTS
WAIVER OF REQUIREMENT THAT WHERE A PORTION OF THE SITE IS LOCATED OUTSIDE OF THE AQUIFER PROTECTION DISTRICT, POTENTIAL POLLUTION SOURCES, SUCH AS ON SITE DISPOSAL SYSTEMS, SHOULD BE LOCATED OUTSIDE THE DISTRICT BOUNDARIES, IN ORDER TO ALLOW RESERVE LEACHING FIELD TO BE LOCATED WITHIN THE AQUIFER PROTECTION DISTRICT.
7.7104(G) AND (H) W-DISTRICT USE REGULATIONS
WAIVER OF REQUIREMENTS FOR SPECIAL PERMIT FOR USE IN THE W-DISTRICT, IN ORDER TO SUBSTITUTE APPROVAL UNDER THIS COMPREHENSIVE PERMIT.
7.7106 SUBMITTALS
WAIVER OF REQUIREMENTS FOR SPECIAL PERMIT APPLICATIONS TO BE PREPARED AND SUBMITTED TO THE BOARD OF APPEALS, IN ORDER TO PERMIT ONE COMPREHENSIVE SUBMISSION TO THE BOARD TO BE ACTED ON UNDER G.L. C. 40B, §21.
7.7109 PROCEDURES
WAIVER OF REQUIREMENT FOR SPECIAL PERMIT APPLICATIONS TO BE PREPARED AND SUBMITTED TO THE BOARD OF APPEALS IN ORDER TO PERMIT A SINGLE COMPREHENSIVE PERMIT SUBMISSION TO THE BOARD TO BE ACTED UPON UNDER G.L. C.40B, §21.
7.7200 LANDS BORDERING THE W-DISTRICT
WAIVER OF REQUIREMENT FOR SPECIAL PERMIT TO PLACE STRUCTURES WITHIN ONE HUNDRED (100') FEET OF THE W-DISTRICT, IN ORDER TO PERMIT CONSTRUCTION OF WARD ROAD AND A FIRE POND WITHIN 100' OF W-DISTRICT.
8.8000 SITE PLAN APPROVAL & DESIGN REVIEW
WAIVER OF REQUIREMENT FOR SITE PLAN REVIEW BY THE PLANNING BOARD FOR CONSTRUCTION OF MULTI-FAMILY STRUCTURES AND PARKING AREAS ASSOCIATED WITH MULTI-FAMILY STRUCTURES.
9.9001(2) BUILDING PERMITS
WAIVER OF REQUIREMENT THAT NO BUILDING PERMIT SHALL BE ISSUED BY THE INSPECTOR OF BUILDINGS WITHOUT THE WRITTEN APPROVAL OF A SITE PLAN BY THE PLANNING BOARD.

WAIVERS FROM TOWN OF BOXBOROUGH REGULATIONS FOR THE WETLAND BYLAW:
SECTION 2.5.3.1 PERFORMANCE STANDARDS
WAIVER OF PROHIBITION OF PARKING LOTS, PERMANENT STRUCTURES, AND SANITARY WASTE DISPOSAL SYSTEMS WITHIN ADJACENT LAND RESOURCE AREA, IN ORDER TO ALLOW THE PLACEMENT OF THE PROPOSED SANITARY WASTE DISPOSAL SYSTEM, PARKING LOT, ROAD AND OTHER PERMANENT STRUCTURES WITHIN THE ADJACENT LAND RESOURCE AREA IN ACCORDANCE WITH THE SITE PLAN APPROVED FOR THE PROJECT UNDER THIS COMPREHENSIVE PERMIT.

WAIVERS FROM BOXBOROUGH COMPREHENSIVE PERMIT RULES OF THE PROJECT BOARD OF APPEALS:
SECTION 3.02(I) LIST OF REQUESTED EXCEPTIONS
WAIVER OF REQUIREMENT THAT APPLICANT PROVIDES A COMPLETE LIST OF ALL REQUESTED EXCEPTIONS AT THE TIME OF THE INITIAL FILING OF THE APPLICATION IN ORDER TO PERMIT THE LIST TO BE REVISED AS THE PROJECT EVOLVES THROUGH THE HEARING AND APPROVAL PROCESS.

COMMONWEALTH OF MASSACHUSETTS
CHRISTOPHER M. WILLIAMS
CIVIL
No. 43119
REGISTERED PROFESSIONAL ENGINEER
7/9/15

PROFESSIONAL ENGINEER FOR ALLEN & MAJOR ASSOCIATES, INC.

REV	DATE	DESCRIPTION
9.	07/08/2015	ISSUED FOR DEFINITIVE SITE PLAN
8.	06/12/2015	REVISED PER FIRE DEPARTMENT COMMENTS
7.	05/15/2015	ISSUED FOR PERMIT
6.	05/05/2015	ISSUED FOR DEP PERMIT APPROVAL
5.	05/04/2015	REVISED FOR PRICING
4.	03/26/2015	REVISED PER TOWN COMMENTS
3.	03/02/2015	ISSUED FOR MEPA
2.	02/27/2015	REVISED PER TOWN COMMENTS
1.	02/12/2015	ISSUED FOR ZONING BOARD OF APPEALS

APPLICANT:
JPI
3 WEST MAIN STREET, SUITE 203
IRVINGTON, NY 10533

PROJECT:
DEFINITIVE SITE PLAN SET
JEFFERSON AT BEAVER BROOK
BOXBOROUGH, MA

PROJECT NO.	2075-01	DATE:	02-11-2015
SCALE:	1"=40'	DWG. NAME:	C2075-10
DESIGNED BY:	SJL	CHECKED BY:	CMQ

PREPARED BY:
ALLEN & MAJOR ASSOCIATES, INC.
civil & structural engineering ◆ land surveying
environmental consulting ◆ landscape architecture
www.allenmajor.com
100 COMMERCE WAY
P.O. BOX 2118
WOBURN MA 01888-0118
TEL: (781) 935-6889
FAX: (781) 935-2896
WOBURN, MA ◆ LAKEVILLE, MA ◆ MANCHESTER, NH

THIS DRAWING HAS BEEN PREPARED IN ELECTRONIC FORMAT. CLIENT/CLIENT'S REPRESENTATIVE OR CONSULTANT MAY BE PROVIDED COPIES OF DRAWINGS AND SPECIFICATIONS ON MAGNETIC MEDIA FOR HIS/HER INFORMATION AND USE FOR SPECIFIC APPLICATION TO THIS PROJECT. DUE TO THE POTENTIAL THAT THE MAGNETIC INFORMATION MAY BE MODIFIED UNINTENTIONALLY OR OTHERWISE, ALLEN & MAJOR ASSOCIATES, INC. MAY REMOVE ALL INDICATION OF THE DOCUMENT'S AUTHORSHIP ON THE MAGNETIC MEDIA. PRINTED REPRESENTATIONS OF THE DRAWINGS AND SPECIFICATIONS ISSUED SHALL BE THE ONLY RECORD COPIES OF ALLEN & MAJOR ASSOCIATES, INC.'S WORK PRODUCT.

DRAWING TITLE: EROSION CONTROL PLAN
SHEET No. C-5C

Copyright©2015 Allen & Major Associates, Inc. All Rights Reserved

DIG SAFE

BEFORE YOU DIG
CALL 811 OR
1-888-DIG-SAFE
1-888-344-7233

GRAPHIC SCALE

80 0 40 80 160 320

(IN FEET)
1 inch = 80 ft.

N:\PROJECTS\2075-01\CIVIL\DRAWINGS\CURRENT\2075-01 – ELECTRICAL.DWG

JPI

WAIVERS OF TOWN OF BOXBOROUGH ZONING BYLAWS:
4.4003(1) USE REGULATION SCHEDULE
WAIVER TO PERMIT SINGLE-FAMILY AND MULTI-FAMILY ATTACHED RESIDENTIAL USES NOT OTHERWISE PERMITTED IN THE INDUSTRIAL COMMERCIAL DISTRICT (I.E., THE PROPOSED TWO (2) SINGLE FAMILY DWELLINGS AND THE PROPOSED 244 APARTMENT UNITS IN ELEVEN (11) MULTI-FAMILY BUILDINGS, FOR A TOTAL OF 246 UNITS)
4.4033 USE REGULATION SCHEDULE
WAIVER TO PERMIT A USE WHICH IS NOT OTHERWISE ACCESSORY TO INDUSTRIAL-COMMERCIAL USES, I.E., A CLUBHOUSE/RENTAL OFFICE.
5.5002 DIMENSIONAL SCHEDULE
WAIVER OF REQUIREMENT FOR A MAXIMUM FLOOR AREA RATIO OF 0.10.
6.6004 SURFACE, CIRCULATION, AND LANDSCAPING REQUIREMENTS
WAIVER OF REQUIREMENT THAT AUTOMOBILE PARKING SPACES SHALL NOT BE LESS THAN 10 FEET BY 20 FEET, IN ORDER TO ALLOW PARKING SPACE OF 9 FEET BY 18 FEET.
6.6103 MULTIPLE BUILDINGS ON ONE LOT
WAIVER OF REQUIREMENT THAT WHERE MORE THAN ONE BUILDING IS PROPOSED TO BE BUILT UPON A LOT, THE PLAN SHALL BE REVIEWED BY THE PLANNING BOARD REGARDING ADEQUACY OF ACCESS TO BUILDINGS, IN ORDER TO SUBSTITUTE THE PERMISSION FROM THE ZONING BOARD OF APPEALS GRANTED UNDER THIS COMPREHENSIVE PERMIT.
6.6105 PRIVATE/COMMON DRIVEWAYS IN THE BUSINESS, BUSINESS 1, OFFICE PARK, TOWN CENTER, AND INDUSTRIAL-COMMERCIAL DISTRICTS
WAIVER OF THE REQUIREMENT THAT PRIVATE/COMMON DRIVEWAYS ARE ALLOWED IN THE IC DISTRICT ONLY BY SPECIAL PERMIT OF THE PLANNING BOARD, IN ORDER TO SUBSTITUTE THE PERMISSION FROM THE ZONING BOARD OF APPEALS UNDER THIS COMPREHENSIVE PERMIT.
7.7004(G) SPECIAL REGULATIONS AQUIFER PROTECTION DISTRICT
WAIVER OF REQUIREMENT THAT THERE BE NO DISPOSAL OF SANITARY WASTE TO A SUBSURFACE DISPOSAL SYSTEM IN QUANTITIES EXCEEDING 440 GALLONS PER DAY PER ACRE OF AQUIFER PROTECTION DISTRICT CONTAINED WITHIN THE LOT, IN ORDER TO ALLOW QUANTITIES OF UP TO 750 GALLONS PER DAY PER ACRE OF THE SITE IN THE AQUIFER PROTECTION DISTRICT IN THE EVENT RESERVE LEACHING FIELDS ARE USED.
7.7007(1) DESIGN REQUIREMENTS
WAIVER OF REQUIREMENT THAT WHERE A PORTION OF THE SITE IS LOCATED OUTSIDE OF THE AQUIFER PROTECTION DISTRICT, POTENTIAL POLLUTION SOURCES, SUCH AS ON SITE DISPOSAL SYSTEMS, SHOULD BE LOCATED OUTSIDE THE DISTRICT BOUNDARIES, IN ORDER TO ALLOW RESERVE LEACHING FIELD TO BE LOCATED WITHIN THE AQUIFER PROTECTION DISTRICT.
7.7104(G) AND (H) W-DISTRICT USE REGULATIONS
WAIVER OF REQUIREMENTS FOR SPECIAL PERMIT FOR USE IN THE W-DISTRICT, IN ORDER TO SUBSTITUTE APPROVAL UNDER THIS COMPREHENSIVE PERMIT.
7.7106 SUBMITTALS
WAIVER OF REQUIREMENTS FOR SPECIAL PERMIT APPLICATIONS TO BE PREPARED AND SUBMITTED TO THE BOARD OF APPEALS, IN ORDER TO PERMIT ONE COMPREHENSIVE SUBMISSION TO THE BOARD TO BE ACTED ON UNDER G.L. C. 40B, §21.
7.7109 PROCEDURES
WAIVER OF REQUIREMENT FOR SPECIAL PERMIT APPLICATIONS TO BE PREPARED AND SUBMITTED TO THE BOARD OF APPEALS IN ORDER TO PERMIT A SINGLE COMPREHENSIVE PERMIT SUBMISSION TO THE BOARD TO BE ACTED UPON UNDER G.L. C.40B, §21.
7.7200 LANDS BORDERING THE W-DISTRICT
WAIVER OF REQUIREMENT FOR SPECIAL PERMIT TO PLACE STRUCTURES WITHIN ONE HUNDRED (100') FEET OF THE W-DISTRICT, IN ORDER TO PERMIT CONSTRUCTION OF WARD ROAD AND A FIRE POND WITHIN 100' OF W-DISTRICT.
8.8000 SITE PLAN APPROVAL & DESIGN REVIEW
WAIVER OF REQUIREMENT FOR SITE PLAN REVIEW BY THE PLANNING BOARD FOR THE CONSTRUCTION OF MULTI-FAMILY STRUCTURES AND PARKING AREAS ASSOCIATED WITH MULTI-FAMILY STRUCTURES.
9.9001(2) BUILDING PERMITS
WAIVER OF REQUIREMENT THAT NO BUILDING PERMIT SHALL BE ISSUED BY THE INSPECTOR OF BUILDINGS WITHOUT THE WRITTEN APPROVAL OF A SITE PLAN BY THE PLANNING BOARD.

WAIVERS FROM TOWN OF BOXBOROUGH REGULATIONS FOR THE WETLAND BYLAW:
SECTION 2.5.3.1 PERFORMANCE STANDARDS
WAIVER OF PROHIBITION OF PARKING LOTS, PERMANENT STRUCTURES, AND SANITARY WASTE DISPOSAL SYSTEMS WITHIN ADJACENT LAND RESOURCE AREA, IN ORDER TO ALLOW THE PLACEMENT OF THE PROPOSED SANITARY WASTE DISPOSAL SYSTEM, PARKING LOT, ROAD AND OTHER PERMANENT STRUCTURES WITHIN THE ADJACENT LAND RESOURCE AREA IN ACCORDANCE WITH THE SITE PLAN APPROVED FOR THE PROJECT UNDER THIS COMPREHENSIVE PERMIT.

WAIVERS FROM BOXBOROUGH COMPREHENSIVE PERMIT RULES OF THE ZONING BOARD OF APPEALS:
SECTION 3.02(I) LIST OF REQUESTED EXCEPTIONS
WAIVER OF REQUIREMENT THAT APPLICANT PROVIDES A COMPLETE LIST OF ALL REQUESTED EXCEPTIONS AT THE TIME OF THE INITIAL FILING OF THE APPLICATION IN ORDER TO PERMIT THE LIST TO BE REVISED AS THE PROJECT EVOLVES THROUGH THE HEARING AND APPROVAL PROCESS.

COMMONWEALTH OF MASSACHUSETTS
TIMOTHY J. WILLIAMS
CIVIL
No.43119
REGISTERED PROFESSIONAL ENGINEER

7/8/15

PROFESSIONAL ENGINEER FOR
ALLEN & MAJOR ASSOCIATES, INC.

REV	DATE	DESCRIPTION
9.	07/08/2015	ISSUED FOR DEFINITIVE SITE PLAN
8.	06/12/2015	REVISED PER FIRE DEPARTMENT COMMENTS
7.	05/15/2015	ISSUED FOR PERMIT
6.	05/05/2015	ISSUED FOR DEP PERMIT APPROVAL
5.	05/04/2015	REVISED FOR PRICING
4.	03/26/2015	REVISED PER TOWN COMMENTS
3.	03/02/2015	ISSUED FOR MEPA
2.	02/27/2015	REVISED PER TOWN COMMENTS
1.	02/12/2015	ISSUED FOR ZONING BOARD OF APPEALS

APPLICANT:

JPI
3 WEST MAIN STREET, SUITE 203
IRVINGTON, NY 10533

PROJECT:

DEFINITIVE SITE PLAN SET
JEFFERSON AT BEAVER BROOK
BOXBOROUGH, MA

PROJECT NO.	2075-01	DATE:	02-11-2015
SCALE:	1"=80'	DWG. NAME:	C2075-10
DESIGNED BY:	SJL	CHECKED BY:	CMQ

PREPARED BY:

ALLEN & MAJOR
ASSOCIATES, INC.
civil & structural engineering ◆ land surveying
environmental consulting ◆ landscape architecture
www.allenmajor.com
100 COMMERCE WAY
P.O. BOX 2118
WOBURN MA 01888-0118
TEL: (781) 935-6889
FAX: (781) 935-2896
WOBURN, MA ◆ LAKEVILLE, MA ◆ MANCHESTER, NH

THIS DRAWING HAS BEEN PREPARED IN ELECTRONIC FORMAT. CLIENT/CLIENT'S REPRESENTATIVE OR CONSULTANT MAY BE PROVIDED COPIES OF DRAWINGS AND SPECIFICATIONS ON MAGNETIC MEDIA FOR HIS/HER INFORMATION AND USE FOR SPECIFIC APPLICATION TO THIS PROJECT. DUE TO THE POTENTIAL THAT THE MAGNETIC INFORMATION MAY BE MODIFIED UNINTENTIONALLY OR OTHERWISE, ALLEN & MAJOR ASSOCIATES, INC. MAY REMOVE ALL INDICATION OF THE DOCUMENT'S AUTHORSHIP ON THE MAGNETIC MEDIA. PRINTED REPRESENTATIONS OF THE DRAWINGS AND SPECIFICATIONS ISSUED SHALL BE THE ONLY RECORD COPIES OF ALLEN & MAJOR ASSOCIATES, INC.'S WORK PRODUCT.

DRAWING TITLE:	SHEET No.
ELECTRIC PLAN	C-6A

Copyright©2015 Allen & Major Associates, Inc.
All Rights Reserved

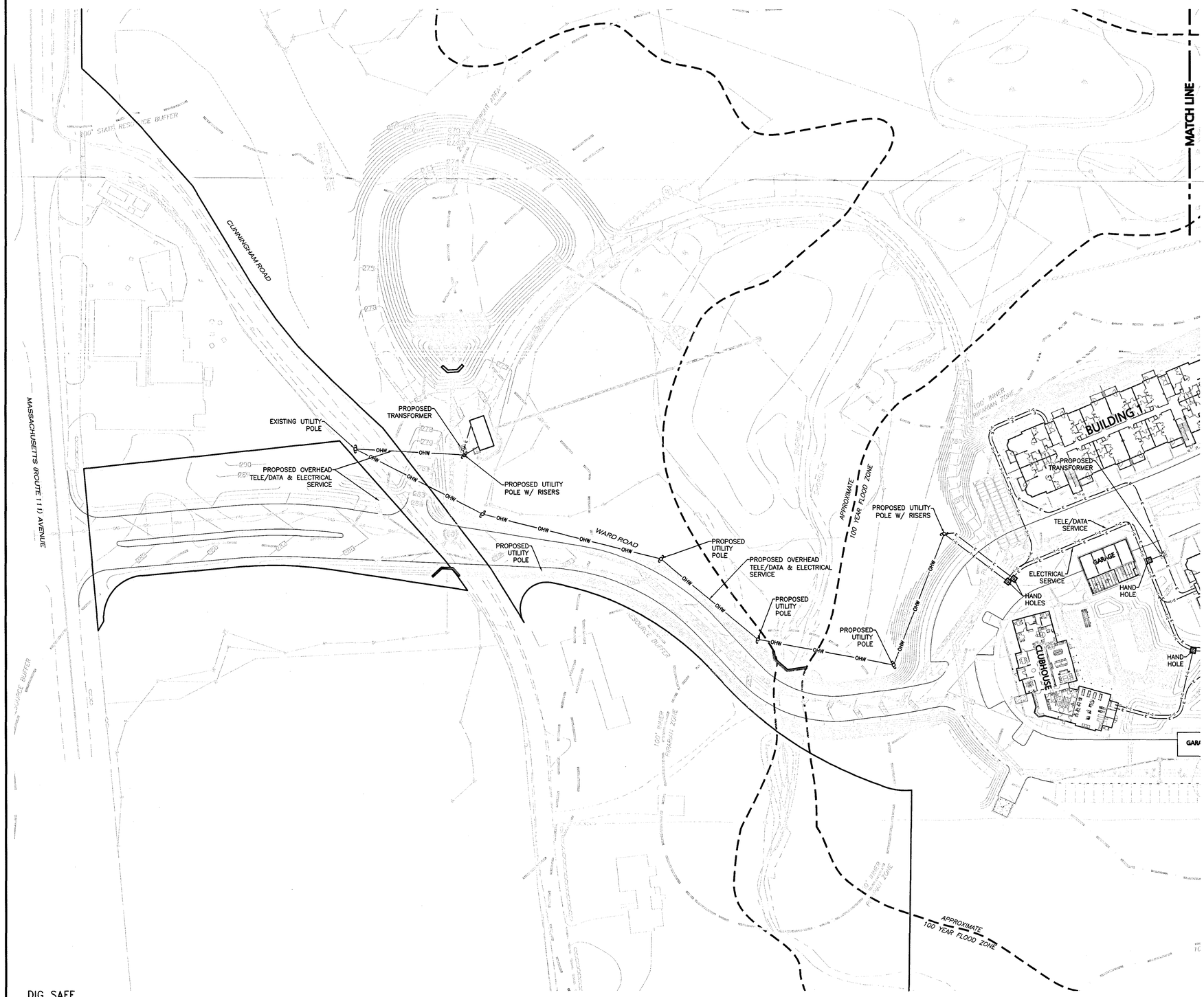

LEGEND:

UTILITY POLE	
HAND HOLE	
ELECTRICAL CONDUIT	—E——E—
OVERHEAD WIRES	—OHW—
TELE/CABLE CONDUIT	—T-C——T-C—

NOTE:

1. ALL ELECTRIC SERVICE CONDUIT NOT LOCATED UNDER A TRAVELED WAY SHALL BE SCHEDULE 40 PVC. ALL ELECTRIC SERVICE CONDUIT LOCATED UNDER A TRAVELED WAY SHALL BE SCHEDULE 80 PVC IN LIEU OF CONCRETE ENCASEMENT.

DIG SAFE

BEFORE YOU DIG
CALL 811 OR
1-888-DIG-SAFE
1-888-344-7233

GRAPHIC SCALE

40 0 20 40 80 160

(IN FEET)
1 inch = 40 ft.

N:\PROJECTS\2075-01\CIVIL\DRAWINGS\CURRENT\2075-01 - ELECTRICAL.DWG

JPI

WAIVERS OF TOWN OF BOXBOROUGH ZONING BYLAWS:
4.4003(1) USE REGULATION SCHEDULE
WAIVER TO PERMIT SINGLE-FAMILY AND MULTI-FAMILY ATTACHED RESIDENTIAL USES NOT OTHERWISE PERMITTED IN THE INDUSTRIAL/COMMERCIAL DISTRICT (I.E. THE PROPOSED TWO (2) SINGLE FAMILY DWELLINGS AND THE PROPOSED 244 APARTMENT UNITS IN ELEVEN (11) MULTI-FAMILY BUILDINGS, FOR A TOTAL OF 246 UNITS)
4.4033 USE REGULATION SCHEDULE
WAIVER TO PERMIT A USE WHICH IS NOT OTHERWISE ACCESSORY TO INDUSTRIAL-COMMERCIAL USES, I.E., A CLUBHOUSE/RENTAL OFFICE.
5.5002 DIMENSIONAL SCHEDULE
WAIVER OF REQUIREMENT FOR A MAXIMUM FLOOR AREA RATIO OF 0.10.
6.6004 SURFACE, CIRCULATION, AND LANDSCAPING REQUIREMENTS
WAIVER OF REQUIREMENT THAT AUTOMOBILE PARKING SPACES SHALL NOT BE LESS THAN 10 FEET BY 20 FEET, IN ORDER TO ALLOW PARKING SPACE OF 9 FEET BY 18 FEET.
6.6103 MULTIPLE BUILDINGS ON ONE LOT
WAIVER OF REQUIREMENT THAT WHERE MORE THAN ONE BUILDING IS PROPOSED TO BE BUILT UPON A LOT, THE PLAN SHALL BE REVIEWED BY THE PLANNING BOARD REGARDING ADEQUACY OF ACCESS TO BUILDINGS, IN ORDER TO SUBSTITUTE THE PERMISSION FROM THE ZONING BOARD OF APPEALS GRANTED UNDER THIS COMPREHENSIVE PERMIT.
6.6105 PRIVATE/COMMON DRIVEWAYS IN THE BUSINESS, BUSINESS 1, OFFICE PARK, TOWN CENTER, AND INDUSTRIAL-COMMERCIAL DISTRICTS
WAIVER OF THE REQUIREMENT THAT PRIVATE/COMMON DRIVEWAYS ARE ALLOWED IN THE IC DISTRICT ONLY BY SPECIAL PERMIT OF THE PLANNING BOARD, IN ORDER TO SUBSTITUTE THE PERMISSION FROM THE ZONING BOARD OF APPEALS UNDER THIS COMPREHENSIVE PERMIT.
7.7004(6) SPECIAL REGULATIONS AQUIFER PROTECTION DISTRICT
WAIVER OF REQUIREMENT THAT THERE BE NO DISPOSAL OF SANITARY WASTE TO A SUBSURFACE DISPOSAL SYSTEM IN QUANTITIES EXCEEDING 440 GALLONS PER DAY PER ACRE OF AQUIFER PROTECTION DISTRICT CONTAINED WITHIN THE LOT, IN ORDER TO ALLOW QUANTITIES OF UP TO 750 GALLONS PER DAY PER ACRE OF THE SITE IN THE AQUIFER PROTECTION DISTRICT IN THE EVENT RESERVE LEACHING FIELDS ARE USED.
7.7007(1) DESIGN REQUIREMENTS
WAIVER OF REQUIREMENT THAT WHERE A PORTION OF THE SITE IS LOCATED OUTSIDE OF THE AQUIFER PROTECTION DISTRICT, POTENTIAL POLLUTION SOURCES, SUCH AS ON SITE DISPOSAL SYSTEMS, SHOULD BE LOCATED OUTSIDE THE DISTRICT BOUNDARIES, IN ORDER TO ALLOW RESERVE LEACHING FIELD TO BE LOCATED WITHIN THE AQUIFER PROTECTION DISTRICT.
7.7104(4) AND (11) W-DISTRICT USE REGULATIONS
WAIVER OF REQUIREMENTS FOR SPECIAL PERMIT FOR USE IN THE W-DISTRICT, IN ORDER TO SUBSTITUTE APPROVAL UNDER THIS COMPREHENSIVE PERMIT.
7.7106 SUBMITTALS
WAIVER OF REQUIREMENTS FOR SPECIAL PERMIT APPLICATIONS TO BE PREPARED AND SUBMITTED TO THE BOARD OF APPEALS, IN ORDER TO PERMIT ONE COMPREHENSIVE SUBMISSION TO THE BOARD TO BE ACTED ON UNDER G.L. C. 40B, §21.
7.7109 PROCEDURES
WAIVER OF REQUIREMENT FOR SPECIAL PERMIT APPLICATIONS TO BE PREPARED AND SUBMITTED TO THE BOARD OF APPEALS IN ORDER TO PERMIT A SINGLE COMPREHENSIVE PERMIT SUBMISSION TO THE BOARD TO BE ACTED UPON UNDER G.L. C.40B, §21.
7.7200 LANDS BORDERING THE W-DISTRICT
WAIVER OF REQUIREMENT FOR SPECIAL PERMIT TO PLACE STRUCTURES WITHIN ONE HUNDRED (100') FEET OF THE W-DISTRICT, IN ORDER TO PERMIT CONSTRUCTION OF WARD ROAD AND A FIRE POND WITHIN 100' OF W-DISTRICT.
8.8000 SITE PLAN APPROVAL & DESIGN REVIEW
WAIVER OF REQUIREMENT FOR SITE PLAN REVIEW BY THE PLANNING BOARD FOR THE CONSTRUCTION OF MULTI-FAMILY STRUCTURES AND PARKING AREAS ASSOCIATED WITH MULTI-FAMILY STRUCTURES.
9.9001(2) BUILDING PERMITS
WAIVER OF REQUIREMENT THAT NO BUILDING PERMIT SHALL BE ISSUED BY THE INSPECTOR OF BUILDINGS WITHOUT THE WRITTEN APPROVAL OF A SITE PLAN BY THE PLANNING BOARD.

WAIVERS FROM TOWN OF BOXBOROUGH REGULATIONS FOR THE WETLAND BYLAW:
SECTION 2.5.3.1 PERFORMANCE STANDARDS
WAIVER OF PROHIBITION OF PARKING LOTS, PERMANENT STRUCTURES, AND SANITARY WASTE DISPOSAL SYSTEMS WITHIN ADJACENT LAND RESOURCE AREA, IN ORDER TO ALLOW PLACEMENT OF THE PROPOSED SANITARY WASTE DISPOSAL SYSTEM, PARKING LOT, ROAD AND OTHER PERMANENT STRUCTURES WITHIN THE ADJACENT RESOURCE AREA IN ACCORDANCE WITH THE SITE PLAN APPROVED FOR THE PROJECT UNDER THIS COMPREHENSIVE PERMIT.

WAIVERS FROM BOXBOROUGH, COMPREHENSIVE PERMIT RULES, OF THE ZONING BOARD OF APPEALS:
SECTION 3.02(1) LIST OF REQUESTED EXCEPTIONS
WAIVER OF REQUIREMENT THAT APPLICANT PROVIDES A COMPLETE LIST OF ALL REQUESTED EXCEPTIONS AT THE TIME OF THE INITIAL FILING OF THE APPLICATION IN ORDER TO PERMIT THE LIST TO BE REVISED AS THE PROJECT EVOLVES THROUGH THE PERMITTING AND APPROVAL PROCESS.

TIMOTHY J. WILLIAMS CIVIL No.43119 REGISTERED PROFESSIONAL ENGINEER
10/15

PROFESSIONAL ENGINEER FOR
ALLEN & MAJOR ASSOCIATES, INC.

REV	DATE	DESCRIPTION
9.	07/08/2015	ISSUED FOR DEFINITIVE SITE PLAN
8.	06/12/2015	REVISED PER FIRE DEPARTMENT COMMENTS
7.	05/15/2015	ISSUED FOR PERMIT
6.	05/05/2015	ISSUED FOR DEP PERMIT APPROVAL
5.	05/04/2015	REVISED FOR PRICING
4.	03/26/2015	REVISED PER TOWN COMMENTS
3.	03/02/2015	ISSUED FOR MEPA
2.	02/27/2015	REVISED PER TOWN COMMENTS
1.	02/12/2015	ISSUED FOR ZONING BOARD OF APPEALS

APPLICANT:
JPI
3 WEST MAIN STREET, SUITE 203
IRVINGTON, NY 10533

PROJECT:
DEFINITIVE SITE PLAN SET
JEFFERSON AT BEAVER BROOK
BOXBOROUGH, MA

PROJECT NO.	2075-01	DATE:	02-11-2015
SCALE:	1"=40'	DWG. NAME:	C2075-10
DESIGNED BY:	SJL	CHECKED BY:	CMQ

PREPARED BY:

ALLEN & MAJOR ASSOCIATES, INC.
civil & structural engineering ◆ land surveying
environmental consulting ◆ landscape architecture
www.allenmajor.com
100 COMMERCE WAY
P.O. BOX 2118
WOBURN MA 01888-0118
TEL: (781) 935-6889
FAX: (781) 935-2896
WOBURN, MA ◆ LAKEVILLE, MA ◆ MANCHESTER, NH

THIS DRAWING HAS BEEN PREPARED IN ELECTRONIC FORMAT. CLIENT/CLIENT'S REPRESENTATIVE OR CONSULTANT MAY BE PROVIDED COPIES OF DRAWINGS AND SPECIFICATIONS ON MAGNETIC MEDIA FOR HIS/HER INFORMATION AND USE FOR SPECIFIC APPLICATION TO THIS PROJECT. DUE TO THE POTENTIAL THAT THE MAGNETIC INFORMATION MAY BE MODIFIED UNINTENTIONALLY OR OTHERWISE, ALLEN & MAJOR ASSOCIATES, INC. MAY REMOVE ALL INDICATION OF THE DOCUMENT'S AUTHORSHIP ON THE MAGNETIC MEDIA. PRINTED REPRESENTATIONS OF THE DRAWINGS AND SPECIFICATIONS ISSUED SHALL BE THE ONLY RECORD COPIES OF ALLEN & MAJOR ASSOCIATES, INC.'S WORK PRODUCT.

DRAWING TITLE:	SHEET No.
ELECTRIC PLAN	C-6B

Copyright©2015 Allen & Major Associates, Inc.
All Rights Reserved

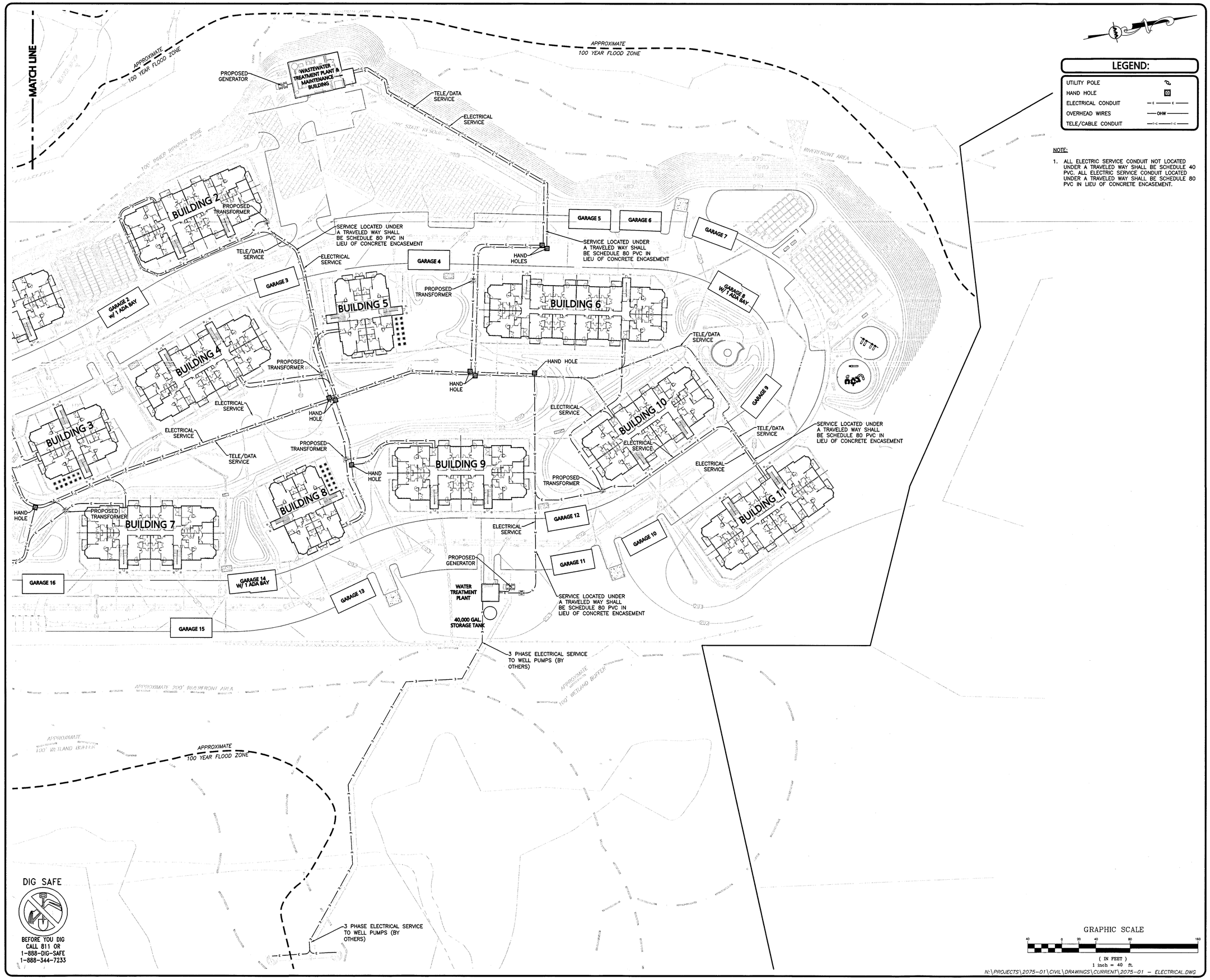

DIG SAFE

BEFORE YOU DIG CALL 811 OR 1-888-DIG-SAFE 1-888-344-7233

GRAPHIC SCALE

40 0 20 40 80 160

(IN FEET)

1 inch = 40 ft.

N:\PROJECTS\2075-01\CIVIL\DRAWINGS\CURRENT\2075-01 - ELECTRICAL.DWG

LEGEND:

UTILITY POLE	
HAND HOLE	H
ELECTRICAL CONDUIT	—E——E—
OVERHEAD WIRES	—OHW—
TELE/CABLE CONDUIT	—T-C——T-C—

NOTE:

1. ALL ELECTRIC SERVICE CONDUIT NOT LOCATED UNDER A TRAVELED WAY SHALL BE SCHEDULE 40 PVC. ALL ELECTRIC SERVICE CONDUIT LOCATED UNDER A TRAVELED WAY SHALL BE SCHEDULE 80 PVC IN LIEU OF CONCRETE ENCASEMENT.

JPI

WAIVERS OF TOWN OF BOXBOROUGH ZONING BYLAWS:

4.4003(1) USE REGULATION SCHEDULE
WAIVER TO PERMIT SINGLE-FAMILY AND MULTI-FAMILY ATTACHED RESIDENTIAL USES NOT OTHERWISE PERMITTED IN THE INDUSTRIAL COMMERCIAL DISTRICT (I.E., THE PROPOSED TWO (2) SINGLE FAMILY DWELLINGS AND THE PROPOSED 244 APARTMENT UNITS IN ELEVEN (11) MULTI-FAMILY BUILDINGS, FOR A TOTAL OF 246 UNITS)

4.4033 USE REGULATION SCHEDULE
WAIVER TO PERMIT A USE WHICH IS NOT OTHERWISE ACCESSORY TO INDUSTRIAL-COMMERCIAL USES, I.E., A CLUBHOUSE/RENTAL OFFICE.

5.5002 DIMENSIONAL SCHEDULE
WAIVER OF REQUIREMENT FOR A MAXIMUM FLOOR AREA RATIO OF 0.10.

6.6004 SURFACE, CIRCULATION, AND LANDSCAPING REQUIREMENTS
WAIVER OF REQUIREMENT THAT AUTOMOBILE PARKING SPACES SHALL NOT BE LESS THAN 10 FEET BY 20 FEET, IN ORDER TO ALLOW PARKING SPACE OF 9 FEET BY 18 FEET.

6.6103 MULTIPLE BUILDINGS ON ONE LOT
WAIVER OF REQUIREMENT THAT WHERE MORE THAN ONE BUILDING IS PROPOSED TO BE BUILT UPON A LOT, THE PLAN SHALL BE REVIEWED BY THE PLANNING BOARD REGARDING ADEQUACY OF ACCESS TO BUILDINGS IN ORDER TO SUBSTITUTE THE PERMISSION FROM THE ZONING BOARD OF APPEALS GRANTED UNDER THIS COMPREHENSIVE PERMIT.

6.6105 PRIVATE/COMMON DRIVEWAYS IN THE BUSINESS, BUSINESS 1, OFFICE PARK, TOWN CENTER, AND INDUSTRIAL-COMMERCIAL DISTRICTS
WAIVER OF THE REQUIREMENT THAT PRIVATE/COMMON DRIVEWAYS ARE ALLOWED IN THE IC DISTRICT ONLY BY SPECIAL PERMIT OF THE PLANNING BOARD, IN ORDER TO SUBSTITUTE THE PERMISSION FROM THE ZONING BOARD OF APPEALS UNDER THIS COMPREHENSIVE PERMIT.

7.7004(0) SPECIAL REGULATIONS AQUIFER PROTECTION DISTRICT
WAIVER OF REQUIREMENT THAT THERE BE NO DISPOSAL OF SANITARY WASTE TO A SUBSURFACE DISPOSAL SYSTEM IN QUANTITIES EXCEEDING 440 GALLONS PER DAY PER ACRE OF AQUIFER PROTECTION DISTRICT CONTAINED WITHIN THE LOT, IN ORDER TO ALLOW QUANTITIES OF UP TO 750 GALLONS PER DAY PER ACRE OF THE SITE IN THE AQUIFER PROTECTION DISTRICT IN THE EVENT RESERVE LEACHING FIELDS ARE USED.

7.7007(1) DESIGN REQUIREMENTS
WAIVER OF REQUIREMENT THAT WHERE A PORTION OF THE SITE IS LOCATED OUTSIDE OF THE AQUIFER PROTECTION DISTRICT, POTENTIAL POLLUTION SOURCES, SUCH AS ON SITE DISPOSAL SYSTEMS, SHOULD BE LOCATED OUTSIDE THE DISTRICT BOUNDARIES, IN ORDER TO ALLOW RESERVE LEACHING FIELD TO BE LOCATED WITHIN THE AQUIFER PROTECTION DISTRICT.

7.7104(0) AND (H) W-DISTRICT USE REGULATIONS
WAIVER OF REQUIREMENTS FOR SPECIAL PERMIT FOR USE IN THE W-DISTRICT, IN ORDER TO SUBSTITUTE APPROVAL UNDER THIS COMPREHENSIVE PERMIT.

7.7106 SUBMITTALS
WAIVER OF REQUIREMENTS FOR SPECIAL PERMIT APPLICATIONS TO BE PREPARED AND SUBMITTED TO THE BOARD OF APPEALS, IN ORDER TO PERMIT ONE COMPREHENSIVE SUBMISSION TO THE BOARD TO BE ACTED ON UNDER G.L. C. 40B, §21.

7.7109 PROCEDURES
WAIVER OF REQUIREMENT FOR SPECIAL PERMIT APPLICATIONS TO BE PREPARED AND SUBMITTED TO THE BOARD OF APPEALS IN ORDER TO PERMIT A SINGLE COMPREHENSIVE PERMIT SUBMISSION TO THE BOARD TO BE ACTED UPON UNDER G.L. C.40B, §21.

7.7300 LANDS BORDERING THE W-DISTRICT
WAIVER OF REQUIREMENT FOR SPECIAL PERMIT TO PLACE STRUCTURES WITHIN ONE HUNDRED (100') FEET OF THE W-DISTRICT, IN ORDER TO PERMIT CONSTRUCTION OF WARD ROAD AND A FIRE POND WITHIN 100' OF W-DISTRICT.

8.8000 SITE PLAN APPROVAL & DESIGN REVIEW
WAIVER OF REQUIREMENT FOR SITE PLAN REVIEW BY THE PLANNING BOARD FOR THE CONSTRUCTION OF MULTI-FAMILY STRUCTURES AND PARKING AREAS ASSOCIATED WITH MULTI-FAMILY STRUCTURES.

9.9001(2) BUILDING PERMITS
WAIVER OF REQUIREMENT THAT NO BUILDING PERMIT SHALL BE ISSUED BY THE INSPECTOR OF BUILDINGS WITHOUT THE WRITTEN APPROVAL OF A SITE PLAN BY THE PLANNING BOARD.

WAIVERS FROM TOWN OF BOXBOROUGH REGULATIONS FOR THE WETLAND BYLAW:

SECTION 2.5.3.1 PERFORMANCE STANDARDS
WAIVER OF PROVISION OF PARKING LOTS, PERMANENT STRUCTURES, AND SANITARY WASTE DISPOSAL SYSTEMS WITHIN ADJACENT LAND RESOURCE AREA, IN ORDER TO ALLOW PLACEMENT OF THE PROPOSED SANITARY WASTE DISPOSAL SYSTEM, PARKING LOT, ROAD AND OTHER PERMANENT STRUCTURES WITHIN THE MANAGED LAND RESOURCE AREA IN ACCORDANCE WITH THE SITE PLAN APPROVED FOR THE PROJECT UNDER THIS COMPREHENSIVE PERMIT.

WAIVERS FROM BOXBOROUGH COMPREHENSIVE PERMIT RULES OF THE ZONING BOARD OF APPEALS:

SECTION 3.02(I) LIST OF REQUESTED EXCEPTIONS
WAIVER OF REQUIREMENT THAT APPLICANT PROVIDES A COMPLETE LIST OF ALL REQUESTED EXCEPTIONS AT THE TIME OF THE INITIAL FILING OF THE APPLICATION IN ORDER TO PERMIT THE LIST TO BE REVISED AS THE PROJECT EVOLVES THROUGH THE HEARING AND APPROVAL PROCESS.

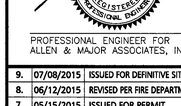

PROFESSIONAL ENGINEER FOR ALLEN & MAJOR ASSOCIATES, INC.

REV	DATE	DESCRIPTION
9.	07/08/2015	ISSUED FOR DEFINITIVE SITE PLAN
8.	06/12/2015	REVISED PER FIRE DEPARTMENT COMMENTS
7.	05/15/2015	ISSUED FOR PERMIT
6.	05/05/2015	ISSUED FOR DEP PERMIT APPROVAL
5.	05/04/2015	REVISED FOR PRICING
4.	03/26/2015	REVISED PER TOWN COMMENTS
3.	03/02/2015	ISSUED FOR MEPA
2.	02/27/2015	REVISED PER TOWN COMMENTS
1.	02/12/2015	ISSUED FOR ZONING BOARD OF APPEALS

APPLICANT:

JPI
3 WEST MAIN STREET, SUITE 203
IRVINGTON, NY 10533

PROJECT:

DEFINITIVE SITE PLAN SET
JEFFERSON AT BEAVER BROOK
BOXBOROUGH, MA

PROJECT NO.	2075-01	DATE:	02-11-2015
SCALE:	1"=40'	DWG. NAME:	C2075-10
DESIGNED BY:	SJL	CHECKED BY:	CMQ

PREPARED BY:

ALLEN & MAJOR ASSOCIATES, INC.
civil & structural engineering ◆ land surveying
environmental consulting ◆ landscape architecture
www.allenmajor.com
100 COMMERCE WAY
P.O. BOX 2118
WOBURN MA 01888-0118
TEL: (781) 935-6889
FAX: (781) 935-2896
WOBURN, MA ◆ LAKEVILLE, MA ◆ MANCHESTER, NH

THIS DRAWING HAS BEEN PREPARED IN ELECTRONIC FORMAT. CLIENT/CLIENT'S REPRESENTATIVE OR CONSULTANT MAY BE PROVIDED COPIES OF DRAWINGS AND SPECIFICATIONS ON MAGNETIC MEDIA FOR HIS/HER INFORMATION AND USE FOR SPECIFIC APPLICATION TO THIS PROJECT. DUE TO THE POTENTIAL THAT THE MAGNETIC INFORMATION MAY BE MODIFIED UNINTENTIONALLY OR OTHERWISE, ALLEN & MAJOR ASSOCIATES, INC. MAY REMOVE ALL INDICATION OF THE DOCUMENTS AUTHORSHIP ON THE MAGNETIC MEDIA. PRINTED REPRESENTATIONS OF THE DRAWINGS AND SPECIFICATIONS ISSUED SHALL BE THE ONLY RECORD COPIES OF ALLEN & MAJOR ASSOCIATES, INC.'S WORK PRODUCT.

DRAWING TITLE:	SHEET No.
ELECTRIC PLAN	C-6C

Copyright ©2015 Allen & Major Associates, Inc. All Rights Reserved

DIG SAFE

BEFORE YOU DIG
CALL 811 OR
1-888-DIG-SAFE
1-888-344-7233

GRAPHIC SCALE

80 0 40 80 160 320

(IN FEET)
1 inch = 80 ft.

N:\PROJECTS\2075-01\CIVIL\DRAWINGS\CURRENT\2075-01 - LIGHTING.DWG

JPI

WAIVERS OF TOWN OF BOXBOROUGH ZONING BYLAWS:

4.4003(1) USE REGULATION SCHEDULE
WAIVER TO PERMIT SINGLE-FAMILY AND MULTI-FAMILY ATTACHED RESIDENTIAL USES, NOT OTHERWISE PERMITTED IN THE INDUSTRIAL/COMMERCIAL DISTRICT (I.E. THE PROPOSED TWO (2) SINGLE FAMILY DWELLINGS AND THE PROPOSED 244 APARTMENT UNITS IN ELEVEN (11) MULTI-FAMILY BUILDINGS, FOR A TOTAL OF 246 UNITS)

4.4033 USE REGULATION SCHEDULE
WAIVER TO PERMIT A USE WHICH IS NOT OTHERWISE ACCESSORY TO INDUSTRIAL-COMMERCIAL USES, I.E., A CLUBHOUSE/RENTAL OFFICE.

5.5002 DIMENSIONAL SCHEDULE
WAIVER OF REQUIREMENT FOR A MAXIMUM FLOOR AREA RATIO OF 0.10.

6.6004 SURFACE, CIRCULATION, AND LANDSCAPING REQUIREMENTS
WAIVER OF REQUIREMENT THAT AUTOMOBILE PARKING SPACES SHALL NOT BE LESS THAN 10 FEET BY 20 FEET, IN ORDER TO ALLOW PARKING SPACE OF 9 FEET BY 18 FEET.

6.6103 MULTIPLE BUILDINGS ON ONE LOT
WAIVER OF REQUIREMENT THAT WHERE MORE THAN ONE BUILDING IS PROPOSED TO BE BUILT UPON A LOT, THE PLAN SHALL BE REVIEWED BY THE PLANNING BOARD REGARDING ADEQUACY OF ACCESS TO BUILDINGS, IN ORDER TO SUBSTITUTE THE PERMISSION FROM THE ZONING BOARD OF APPEALS GRANTED UNDER THIS COMPREHENSIVE PERMIT.

6.6105 PRIVATE/COMMON DRIVEWAYS IN THE BUSINESS, BUSINESS 1, OFFICE PARK, TOWN CENTER, AND INDUSTRIAL-COMMERCIAL DISTRICTS
WAIVER OF THE REQUIREMENT THAT PRIVATE/COMMON DRIVEWAYS ARE ALLOWED IN THE IC DISTRICT ONLY BY SPECIAL PERMIT OF THE PLANNING BOARD, IN ORDER TO SUBSTITUTE THE PERMISSION FROM THE ZONING BOARD OF APPEALS UNDER THIS COMPREHENSIVE PERMIT.

7.7004(G) SPECIAL REGULATIONS AQUIFER PROTECTION DISTRICT
WAIVER OF REQUIREMENT THAT THERE BE NO DISPOSAL OF SANITARY WASTE TO A SUBSURFACE DISPOSAL SYSTEM IN QUANTITIES EXCEEDING 440 GALLONS PER DAY PER ACRE OF AQUIFER PROTECTION DISTRICT CONTAINED WITHIN THE LOT, IN ORDER TO ALLOW QUANTITIES OF UP TO 750 GALLONS PER DAY PER ACRE OF THE SITE IN THE AQUIFER PROTECTION DISTRICT IN THE EVENT RESERVE LEACHING FIELDS ARE USED.

7.7007(1) DESIGN REQUIREMENTS
WAIVER OF REQUIREMENT THAT WHERE A PORTION OF THE SITE IS LOCATED OUTSIDE OF THE AQUIFER PROTECTION DISTRICT, POTENTIAL POLLUTION SOURCES, SUCH AS ON SITE DISPOSAL SYSTEMS, SHOULD BE LOCATED OUTSIDE THE DISTRICT BOUNDARIES, IN ORDER TO ALLOW RESERVE LEACHING FIELD TO BE LOCATED WITHIN THE AQUIFER PROTECTION DISTRICT.

7.7104(G) AND (H) W-DISTRICT USE REGULATIONS
WAIVER OF REQUIREMENTS FOR SPECIAL PERMIT FOR USE IN THE W-DISTRICT, IN ORDER TO SUBSTITUTE APPROVAL UNDER THIS COMPREHENSIVE PERMIT.

7.7106 SUBMITTALS
WAIVER OF REQUIREMENTS FOR SPECIAL PERMIT APPLICATIONS TO BE PREPARED AND SUBMITTED TO THE BOARD OF APPEALS, IN ORDER TO PERMIT ONE COMPREHENSIVE SUBMISSION TO THE BOARD TO BE ACTED ON UNDER G.L. C. 40B, §21.

7.7109 PROCEDURES
WAIVER OF REQUIREMENT FOR SPECIAL PERMIT APPLICATIONS TO BE PREPARED AND SUBMITTED TO THE BOARD OF APPEALS IN ORDER TO PERMIT A SINGLE COMPREHENSIVE PERMIT SUBMISSION TO THE BOARD TO BE ACTED UPON UNDER G.L. C.40B, §21.

7.7200 LANDS BORDERING THE W-DISTRICT
WAIVER OF REQUIREMENT FOR SPECIAL PERMIT TO PLACE STRUCTURES WITHIN ONE HUNDRED (100) FEET OF THE W-DISTRICT, IN ORDER TO PERMIT CONSTRUCTION OF WARD ROAD AND A FIRE POND WITHIN 100' OF W-DISTRICT.

8.8000 SITE PLAN APPROVAL & DESIGN REVIEW
WAIVER OF REQUIREMENT FOR SITE PLAN REVIEW BY THE PLANNING BOARD FOR THE CONSTRUCTION OF MULTI-FAMILY STRUCTURES AND PARKING AREAS ASSOCIATED WITH MULTI-FAMILY STRUCTURES.

9.9001(2) BUILDING PERMITS
WAIVER OF REQUIREMENT THAT NO BUILDING PERMIT SHALL BE ISSUED BY THE INSPECTOR OF BUILDINGS WITHOUT THE WRITTEN APPROVAL OF A SITE PLAN BY THE PLANNING BOARD.

WAIVERS FROM TOWN OF BOXBOROUGH REGULATIONS FOR THE WETLAND BYLAW:

SECTION 2.5.3.1 PERFORMANCE STANDARDS
WAIVER OF PROHIBITION OF PARKING LOTS, PERMANENT STRUCTURES, AND SANITARY WASTE DISPOSAL SYSTEMS WITHIN ADJACENT LAND RESOURCE AREA, IN ORDER TO ALLOW THE PLACEMENT OF THE PROPOSED SANITARY WASTE DISPOSAL SYSTEM, PARKING LOT, ROAD AND OTHER PERMANENT STRUCTURES WITHIN THE ADJACENT LAND RESOURCE AREA IN ACCORDANCE WITH THE SITE PLAN APPROVED FOR THE PROJECT UNDER THIS COMPREHENSIVE PERMIT.

WAIVERS FROM BOXBOROUGH COMPREHENSIVE PERMIT RULES OF THE CONSTRUCTION BOARD OF APPEALS:

SECTION 3.02(I) LIST OF REQUESTED EXCEPTIONS
WAIVER OF REQUIREMENT THAT APPLICANT PROVIDES A COMPLETE LIST OF ALL REQUESTED EXCEPTIONS AT THE TIME OF THE INITIAL FILING OF THE APPLICATION IN ORDER TO PERMIT ONE LIST TO BE REVISED AS THE PROJECT EVOLVES THROUGH THE HEARING AND APPROVAL PROCESS.

COMMONWEALTH OF MASSACHUSETTS
TIMOTHY J. WILLIAMS
CIVIL
No. 43119
REGISTERED PROFESSIONAL ENGINEER
9/8/15

PROFESSIONAL ENGINEER FOR
ALLEN & MAJOR ASSOCIATES, INC.

REV	DATE	DESCRIPTION
9.	07/08/2015	ISSUED FOR DEFINITIVE SITE PLAN
8.	06/12/2015	REVISED PER FIRE DEPARTMENT COMMENTS
7.	05/15/2015	ISSUED FOR PERMIT
6.	05/05/2015	ISSUED FOR DEP PERMIT APPROVAL
5.	05/04/2015	REVISED FOR PRICING
4.	03/26/2015	REVISED PER TOWN COMMENTS
3.	03/02/2015	ISSUED FOR MEPA
2.	02/27/2015	REVISED PER TOWN COMMENTS
1.	02/12/2015	ISSUED FOR ZONING BOARD OF APPEALS

APPLICANT:

JPI
3 WEST MAIN STREET, SUITE 203
IRVINGTON, NY 10533

PROJECT:

DEFINITIVE SITE PLAN SET
JEFFERSON AT BEAVER BROOK
BOXBOROUGH, MA

PROJECT NO.	2075-01	DATE:	02-11-2015
SCALE:	1"=80'	DWG. NAME:	C2075-10
DESIGNED BY:	SJL	CHECKED BY:	CMQ

PREPARED BY:

ALLEN & MAJOR ASSOCIATES, INC.
civil & structural engineering ◆ land surveying
environmental consulting ◆ landscape architecture
www.allenmajor.com
100 COMMERCE WAY
P.O. BOX 2118
WOBURN MA 01888-0118
TEL: (781) 935-6889
FAX: (781) 935-2896
WOBURN, MA ◆ LAKEVILLE, MA ◆ MANCHESTER, NH

THIS DRAWING HAS BEEN PREPARED IN ELECTRONIC FORMAT. CLIENT/CLIENTS REPRESENTATIVE OR CONSULTANT MAY BE PROVIDED COPIES OF DRAWINGS AND SPECIFICATIONS ON MAGNETIC MEDIA FOR HIS/HER INFORMATION AND USE FOR SPECIFIC APPLICATION TO THIS PROJECT. DUE TO THE POTENTIAL THAT THE MAGNETIC INFORMATION MAY BE MODIFIED UNINTENTIONALLY OR OTHERWISE, ALLEN & MAJOR ASSOCIATES, INC. MAY REMOVE ALL INDICATION OF THE DOCUMENTS AUTHORSHIP ON THE MAGNETIC MEDIA. PRINTED REPRESENTATIONS OF THE DRAWINGS AND SPECIFICATIONS ISSUED SHALL BE THE ONLY RECORD COPIES OF ALLEN & MAJOR ASSOCIATES, INC.'S WORK PRODUCT.

DRAWING TITLE:

SITE
LIGHTING PLAN

SHEET No.

C-7A

Copyright©2015 Allen & Major Associates, Inc.
All Rights Reserved

DETAILED POOL AREA LIGHTING

SCALE 1" = 10'

Luminaire Schedule								
Symbol	Qty	Label	Arrangement	Total Lamp Lumens	LLF	Description	Lum. Watts	Total Watts
⊙	11	A	SINGLE	N.A.	0.900	BK-EC-LED-e23-WFL-12-NS-LED-e23-WFL-12	8.3	91.3
☼	15	B	SINGLE	3400	0.900	TEKA-PPL-2546-T15789A	0	0

Calculation Summary							
Label	CalcType	Units	Avg	Max	Min	Avg/Min	Max/Min
CalcPts	Illuminance	Fc	2.15	16.1	0.1	21.50	161.00
PERGULA ONE WORKPLACE	Illuminance	Fc	5.19	24.6	0.3	17.30	82.00
PERGULA TWO WORKPLACE	Illuminance	Fc	5.64	9.6	3.3	1.71	2.91

NOTE:
SIZE AND FOOTING FOR BASES TO BE VERIFIED BY STRUCTURAL ENGINEER.

TYPES A, AN, AB LIGHT POLE & BASE DETAIL

NOT TO SCALE

NOTES:

1. ALL LIGHTING FIXTURES SHALL BE MANUFACTURED BY US ARCHITECTURAL LIGHTING OR APPROVED EQUAL.

   CONTACT INFORMATION:
   PAUL ABDELLA
   OMNI-LITE, INC.
   263 WINN STREET
   BURLINGTON, MA 01803
   PHONE: 781-272-2300
   FAX: 781-272-0759
   www.omnilight.com

2. THE CONTRACTOR IS SPECIFICALLY CAUTIONED THAT THE LOCATION AND/OR ELEVATION OF EXISTING UTILITIES AND STRUCTURES AS SHOWN ON THESE PLANS IS BASED ON RECORDS OF VARIOUS UTILITY COMPANIES AND WHERE POSSIBLE, MEASUREMENTS TAKEN IN THE FIELD. THIS INFORMATION IS NOT TO BE RELIED ON AS BEING EXACT OR COMPLETE. THE LOCATION OF ALL UNDERGROUND UTILITIES AND STRUCTURES SHALL BE VERIFIED IN THE FIELD BY THE CONTRACTOR PRIOR TO THE START OF CONSTRUCTION. THE CONTRACTOR MUST CONTACT THE APPROPRIATE UTILITY COMPANY, ANY GOVERNING PERMITTING AUTHORITY, AND "DIGSAFE" AT LEAST 72 HOURS PRIOR TO ANY EXCAVATION WORK TO REQUEST EXACT FIELD LOCATION OF UTILITIES AND THE ENGINEER SHALL BE NOTIFIED IN WRITING OF ANY UTILITIES INTERFERING WITH THE PROPOSED CONSTRUCTION AND APPROPRIATE REMEDIAL ACTION TAKEN BEFORE PROCEEDING WITH THE WORK. IT SHALL BE THE RESPONSIBILITY OF THE CONTRACTOR TO RELOCATE ALL EXISTING UTILITIES WHICH CONFLICT WITH THE PROPOSED IMPROVEMENTS SHOWN ON THE PLANS.

3. ALL PARKING AREA AND ACCESS DRIVE LIGHTS SHALL OPERATE ON A PHOTO-CELL & PROGRAMMABLE TIMER.

4. CONTROLS FOR ALL EXTERIOR LIGHTING BY BUILDING CONTRACTOR.

5. WIRING OF BUILDING MOUNTED FIXTURES BY BUILDING CONTRACTOR.

6. THE INFORMATION SHOWN ON THIS PLAN IS THE SOLE PROPERTY OF ALLEN & MAJOR ASSOCIATES, INC. IT'S INTENDED USE IS TO PROVIDE INFORMATION. ANY ALTERATION, MISUSE, OR RECALCULATION OF INFORMATION OR DATA WITHOUT THE EXPRESSED, WRITTEN CONSENT OF ALLEN & MAJOR ASSOCIATES, INC. IS STRICTLY PROHIBITED.

MATCH LINE

Luminaire Schedule								
Symbol	Qty	Label	Arrangement	Total Lamp Lumens	LLF	Description	Lum. Watts	Total Watts
	6	BF	SINGLE	N.A.	0.900	CREE OSQ A xx 25D J 30K-UL	168	1008
	27	H2	SINGLE	N.A.	0.900	STERNBERG 1521RLED-CFG-4ARC45T2	65.3	1763.1
	29	M4	SINGLE	N.A.	0.900	STERNBERG-1527RLED-FG-6ARC45T4	95.7	2775.3
	6	P3	SINGLE	N.A.	0.900	STERNBERG 1527RLED-FG-6ARC45T3	94.8	568.8
	2	P3-B	BACK-BACK	N.A.	0.900	STERNBERG 1527RLED-FG-6ARC45T3	94.8	379.2
	1	WP3-18	SINGLE	N.A.	0.900	WILLIAMS-VWPV-LED18_740-T3-EDD-INV-UNV	22	22
	10	WP4-18	SINGLE	N.A.	0.900	WILLIAMS-VWPV-LED18_740-T4-EDD-INV-UNV	22	220
	41	WP2-18	SINGLE	N.A.	0.900	WILLIAMS-VWPV-LED18_740-T2-EDD-INV-UNV	22	902

Calculation Summary							
Label	CalcType	Units	Avg	Max	Min	Avg/Min	Max/Min
CalcPts	Illuminance	Fc	0.78	20.7	0.0	N.A.	N.A.

DIG SAFE

BEFORE YOU DIG
CALL 811 OR
1-888-DIG-SAFE
1-888-344-7233

GRAPHIC SCALE

40 0 20 40 80 160

(IN FEET)
1 inch = 40 ft.

N:\PROJECTS\2075-01\CIVIL\DRAWINGS\CURRENT\2075-01 - LIGHTING.DWG

JPI

WAIVERS OF TOWN OF BOXBOROUGH ZONING BYLAWS:
4.4003(1) USE REGULATION SCHEDULE
WAIVER TO PERMIT SINGLE-FAMILY AND MULTI-FAMILY ATTACHED RESIDENTIAL USES NOT OTHERWISE PERMITTED IN THE INDUSTRIAL COMMERCIAL DISTRICT (I.E., THE PROPOSED TWO (2) SINGLE FAMILY DWELLINGS AND THE PROPOSED 244 APARTMENT UNITS IN ELEVEN (11) MULTI-FAMILY BUILDINGS, FOR A TOTAL OF 246 UNITS)
4.4033 USE REGULATION SCHEDULE
WAIVER TO PERMIT A USE WHICH IS NOT OTHERWISE ACCESSORY TO INDUSTRIAL-COMMERCIAL USES, I.E., A CLUBHOUSE/RENTAL OFFICE.
5.5002 DIMENSIONAL SCHEDULE
WAIVER OF REQUIREMENT FOR A MAXIMUM FLOOR AREA RATIO OF 0.10.
6.6004 SURFACE, CIRCULATION, AND LANDSCAPING REQUIREMENTS
WAIVER OF REQUIREMENT THAT AUTOMOBILE PARKING SPACES SHALL NOT BE LESS THAN 10 FEET BY 20 FEET, IN ORDER TO ALLOW PARKING SPACE OF 9 FEET BY 18 FEET.
6.6103 MULTIPLE BUILDINGS ON ONE LOT
WAIVER OF REQUIREMENT THAT WHERE MORE THAN ONE BUILDING IS PROPOSED TO BE BUILT UPON A LOT, THE PLAN SHALL BE REVIEWED BY THE PLANNING BOARD REGARDING ADEQUACY OF ACCESS TO BUILDINGS, IN ORDER TO SUBSTITUTE THE PERMISSION FROM THE ZONING BOARD OF APPEALS GRANTED UNDER THIS COMPREHENSIVE PERMIT.
6.6105 PRIVATE/COMMON DRIVEWAYS IN THE BUSINESS, BUSINESS 1, OFFICE PARK, TOWN CENTER, AND INDUSTRIAL-COMMERCIAL DISTRICTS
WAIVER OF THE REQUIREMENT THAT PRIVATE/COMMON DRIVEWAYS ARE ALLOWED IN THE IC DISTRICT ONLY BY SPECIAL PERMIT OF THE PLANNING BOARD, IN ORDER TO SUBSTITUTE THE PERMISSION FROM THE ZONING BOARD OF APPEALS UNDER THIS COMPREHENSIVE PERMIT.
7.7004(G) SPECIAL REGULATIONS AQUIFER PROTECTION DISTRICT
WAIVER OF REQUIREMENT THAT THERE BE NO DISPOSAL OF SANITARY WASTE TO A SUBSURFACE DISPOSAL SYSTEM IN QUANTITIES EXCEEDING 440 GALLONS PER DAY PER ACRE OF AQUIFER PROTECTION DISTRICT CONTAINED WITHIN THE LOT, IN ORDER TO ALLOW QUANTITIES OF UP TO 750 GALLONS PER DAY PER ACRE OF THE SITE IN THE AQUIFER PROTECTION DISTRICT IN THE EVENT RESERVE LEACHING FIELDS ARE USED.
7.7007(1) DESIGN REQUIREMENTS
WAIVER OF REQUIREMENT THAT WHERE A PORTION OF THE SITE IS LOCATED OUTSIDE OF THE AQUIFER PROTECTION DISTRICT, POTENTIAL POLLUTION SOURCES, SUCH AS ON SITE DISPOSAL SYSTEMS, SHOULD BE LOCATED OUTSIDE THE DISTRICT BOUNDARIES, IN ORDER TO ALLOW RESERVE LEACHING FIELD TO BE LOCATED WITHIN THE AQUIFER PROTECTION DISTRICT.
7.7104(G) AND (H) W-DISTRICT USE REGULATIONS
WAIVER OF REQUIREMENTS FOR SPECIAL PERMIT FOR USE IN THE W-DISTRICT, IN ORDER TO SUBSTITUTE APPROVAL UNDER THIS COMPREHENSIVE PERMIT.
7.7106 SUBMITTALS
WAIVER OF REQUIREMENTS FOR SPECIAL PERMIT APPLICATIONS TO BE PREPARED AND SUBMITTED TO THE BOARD OF APPEALS, IN ORDER TO PERMIT ONE COMPREHENSIVE SUBMISSION TO THE BOARD TO BE ACTED ON UNDER G.L. C. 40B, §21.
7.7109 PROCEDURES
WAIVER OF REQUIREMENT FOR SPECIAL PERMIT APPLICATIONS TO BE PREPARED AND SUBMITTED TO THE BOARD OF APPEALS IN ORDER TO PERMIT A SINGLE COMPREHENSIVE PERMIT SUBMISSION TO THE BOARD TO BE ACTED UPON UNDER G.L. C.40B, §21.
7.7200 LANDS BORDERING THE W-DISTRICT
WAIVER OF REQUIREMENT FOR SPECIAL PERMIT TO PLACE STRUCTURES WITHIN ONE HUNDRED (100') FEET OF THE W-DISTRICT, IN ORDER TO PERMIT CONSTRUCTION OF WARD ROAD AND A FIRE POND WITHIN 100' OF W-DISTRICT.
8.8000 SITE PLAN APPROVAL & DESIGN REVIEW
WAIVER OF REQUIREMENT FOR SITE PLAN REVIEW BY THE PLANNING BOARD FOR THE CONSTRUCTION OF MULTI-FAMILY STRUCTURES AND PARKING AREAS ASSOCIATED WITH MULTI-FAMILY STRUCTURES.
9.9001(2) BUILDING PERMITS
WAIVER OF REQUIREMENT THAT NO BUILDING PERMIT SHALL BE ISSUED BY THE INSPECTOR OF BUILDINGS WITHOUT THE WRITTEN APPROVAL OF A SITE PLAN BY THE PLANNING BOARD.

WAIVERS FROM TOWN OF BOXBOROUGH REGULATIONS FOR THE WETLAND BYLAW:
SECTION 2.5.3.1 PERFORMANCE STANDARDS
WAIVER OF PROHIBITION OF PARKING LOTS, PERMANENT STRUCTURES, AND SANITARY WASTE DISPOSAL SYSTEMS WITHIN ADJACENT LAND RESOURCE AREA, IN ORDER TO ALLOW THE PLACEMENT OF THE PROPOSED SANITARY WASTE DISPOSAL SYSTEM, PARKING LOT, ROAD AND OTHER PERMANENT STRUCTURES WITHIN THE ADJACENT LAND RESOURCE AREA IN ACCORDANCE WITH THE SITE PLAN APPROVED FOR THE PROJECT UNDER THIS COMPREHENSIVE PERMIT.

WAIVERS FROM BOXBOROUGH COMPREHENSIVE PERMIT RULES OF THE ZONING BOARD OF APPEALS:
SECTION 3.02(I) LIST OF REQUESTED EXCEPTIONS
WAIVER OF REQUIREMENT THAT APPLICANT PROVIDES A COMPLETE LIST OF ALL REQUESTED EXCEPTIONS AT THE TIME OF THE INITIAL FILING OF THE APPLICATION IN ORDER TO PERMIT THE LIST TO BE REVISED AS THE PROJECT EVOLVES THROUGH THE HEARING AND APPROVAL PROCESS.

COMMONWEALTH OF MASSACHUSETTS
TIMOTHY J. WILLIAMS
CIVIL
No.43119
REGISTERED PROFESSIONAL ENGINEER
7/8/15

PROFESSIONAL ENGINEER FOR ALLEN & MAJOR ASSOCIATES, INC.

REV	DATE	DESCRIPTION
9.	07/08/2015	ISSUED FOR DEFINITIVE SITE PLAN
8.	06/12/2015	REVISED PER FIRE DEPARTMENT COMMENTS
7.	05/15/2015	ISSUED FOR PERMIT
6.	05/05/2015	ISSUED FOR DEP PERMIT APPROVAL
5.	05/04/2015	REVISED FOR PRICING
4.	03/26/2015	REVISED PER TOWN COMMENTS
3.	03/02/2015	ISSUED FOR MEPA
2.	02/27/2015	REVISED PER TOWN COMMENTS
1.	02/12/2015	ISSUED FOR ZONING BOARD OF APPEALS

APPLICANT:
JPI
3 WEST MAIN STREET, SUITE 203
IRVINGTON, NY 10533

PROJECT:
DEFINITIVE SITE PLAN SET
JEFFERSON AT BEAVER BROOK
BOXBOROUGH, MA

PROJECT NO.	2075-01	DATE:	02-11-2015
SCALE:	1"=40'	DWG. NAME:	C2075-10
DESIGNED BY:	SJL	CHECKED BY:	CMQ

PREPARED BY:

ALLEN & MAJOR ASSOCIATES, INC.
civil & structural engineering ◆ land surveying
environmental consulting ◆ landscape architecture
www.allenmajor.com
100 COMMERCE WAY
P.O. BOX 2118
WOBURN MA 01888-0118
TEL: (781) 935-6889
FAX: (781) 935-2896
WOBURN, MA ◆ LAKEVILLE, MA ◆ MANCHESTER, NH

THIS DRAWING HAS BEEN PREPARED IN ELECTRONIC FORMAT. CLIENT/CLIENT'S REPRESENTATIVE OR CONSULTANT MAY BE PROVIDED COPIES OF DRAWINGS AND SPECIFICATIONS ON MAGNETIC MEDIA FOR HIS/HER INFORMATION AND USE FOR SPECIFIC APPLICATION TO THIS PROJECT. DUE TO THE POTENTIAL THAT THE MAGNETIC INFORMATION MAY BE MODIFIED UNINTENTIONALLY OR OTHERWISE, ALLEN & MAJOR ASSOCIATES, INC. MAY REMOVE ALL INDICATION OF THE DOCUMENT'S AUTHORSHIP ON THE MAGNETIC MEDIA. PRINTED REPRESENTATIONS OF THE DRAWINGS AND SPECIFICATIONS ISSUED SHALL BE THE ONLY RECORD COPIES OF ALLEN & MAJOR ASSOCIATES, INC.'S WORK PRODUCT.

DRAWING TITLE: SITE LIGHTING PLAN

SHEET No. C-7B

Copyright©2015 Allen & Major Associates, Inc. All Rights Reserved

Luminaire Schedule								
Symbol	Qty	Label	Arrangement	Total Lamp Lumens	LLF	Description	Lum. Watts	Total Watts
	6	B1F	SINGLE	N.A.	0.900	CREE OSQ A xx 25D J 30K-UL	168	1008
	27	H2	SINGLE	N.A.	0.900	STERNBERG 1521RLED-CFG-4ARC4512	65.3	1763.1
	29	M4	SINGLE	N.A.	0.900	STERNBERG-1527RLED-FG-6ARC4514	95.7	2775.3
	6	P3	SINGLE	N.A.	0.900	STERNBERG 1527RLED-FG-6ARC4513	94.8	568.8
	2	P3-B	BACK-BACK	N.A.	0.900	STERNBERG 1527RLED-FG-6ARC4513	94.8	379.2
	1	WP3-18	SINGLE	N.A.	0.900	WILLIAMS-VWPV-LED18_740-T3-EDD-INV-UNV	22	22
	10	WP4-18	SINGLE	N.A.	0.900	WILLIAMS-VWPV-LED18_740-T4-EDD-INV-UNV	22	220
	41	WP2-18	SINGLE	N.A.	0.900	WILLIAMS-VWPV-LED18_740-T2-EDD-INV-UNV	22	902

Calculation Summary							
Label	CalcType	Units	Avg	Max	Min	Avg/Min	Max/Min
CalcPts	Illuminance	Fc	0.78	20.7	0.0	N.A.	N.A.

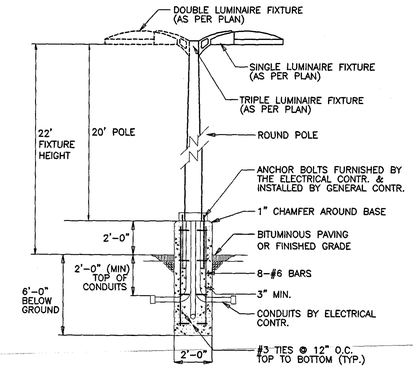

NOTE:
SIZE AND FOOTING FOR BASES TO BE VERIFIED BY STRUCTURAL ENGINEER.

TYPES A, AN, AB LIGHT POLE & BASE DETAIL
NOT TO SCALE

NOTES:

1. ALL LIGHTING FIXTURES SHALL BE MANUFACTURED BY US ARCHITECTURAL LIGHTING OR APPROVED EQUAL.

   CONTACT INFORMATION:
   PAUL ABDELLA
   OMNI-LITE, INC.
   263 WINN STREET
   BURLINGTON, MA 01803
   PHONE: 781-272-2300
   FAX: 781-272-0759
   www.omnilight.com

2. THE CONTRACTOR IS SPECIFICALLY CAUTIONED THAT THE LOCATION AND/OR ELEVATION OF EXISTING UTILITIES AND STRUCTURES AS SHOWN ON THESE PLANS IS BASED ON RECORDS OF VARIOUS UTILITY COMPANIES AND WHERE POSSIBLE, MEASUREMENTS TAKEN IN THE FIELD. THIS INFORMATION IS NOT TO BE RELIED ON AS BEING EXACT OR COMPLETE. THE LOCATION OF ALL UNDERGROUND UTILITIES AND STRUCTURES SHALL BE VERIFIED IN THE FIELD BY THE CONTRACTOR PRIOR TO THE START OF CONSTRUCTION. THE CONTRACTOR MUST CONTACT THE APPROPRIATE UTILITY COMPANY, ANY GOVERNING PERMITTING AUTHORITY, AND "DIGSAFE" AT LEAST 72 HOURS PRIOR TO ANY EXCAVATION WORK TO REQUEST EXACT FIELD LOCATION OF UTILITIES AND THE ENGINEER SHALL BE NOTIFIED IN WRITING OF ANY UTILITIES INTERFERING WITH THE PROPOSED CONSTRUCTION AND APPROPRIATE REMEDIAL ACTION TAKEN BEFORE PROCEEDING WITH THE WORK. IT SHALL BE THE RESPONSIBILITY OF THE CONTRACTOR TO RELOCATE ALL EXISTING UTILITIES WHICH CONFLICT WITH THE PROPOSED IMPROVEMENTS SHOWN ON THE PLANS.

3. ALL PARKING AREA AND ACCESS DRIVE LIGHTS SHALL OPERATE ON A PHOTO-CELL & PROGRAMMABLE TIMER.

4. SITE ELECTRICAL PLAN BY LIGHTING CONTRACTOR

5. CONTROLS FOR ALL EXTERIOR LIGHTING BY BUILDING CONTRACTOR.

6. WIRING OF BUILDING MOUNTED FIXTURES BY BUILDING CONTRACTOR.

7. THE INFORMATION SHOWN ON THIS PLAN IS THE SOLE PROPERTY OF ALLEN & MAJOR ASSOCIATES, INC. IT'S INTENDED USE IS TO PROVIDE INFORMATION. ANY ALTERATION, MISUSE, OR RECALCULATION OF INFORMATION OR DATA WITHOUT THE EXPRESSED, WRITTEN CONSENT OF ALLEN & MAJOR ASSOCIATES, INC. IS STRICTLY PROHIBITED.

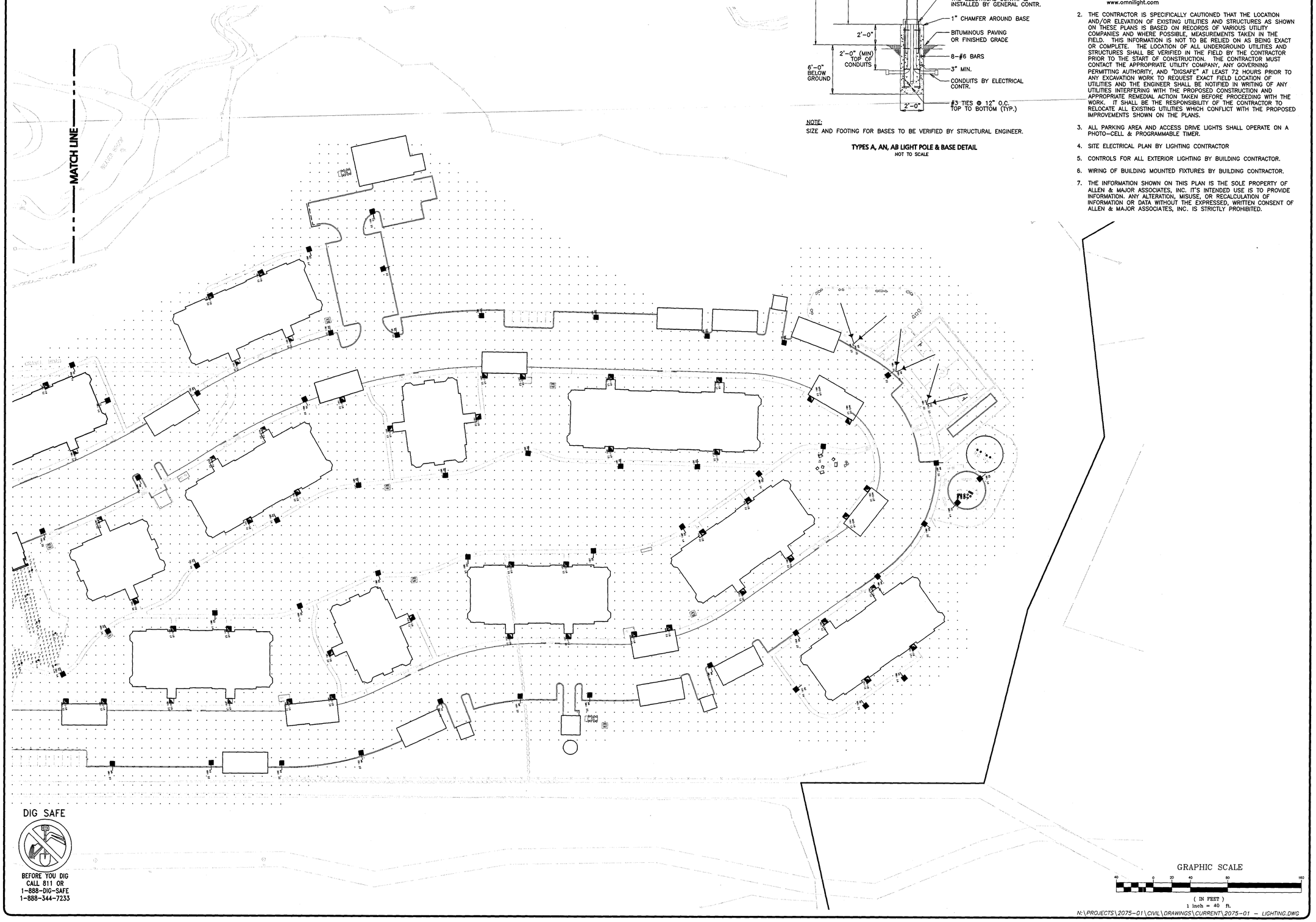

GRAPHIC SCALE
40 0 20 40 80 160
(IN FEET)
1 inch = 40 ft.

N:\PROJECTS\2075-01\CIVIL\DRAWINGS\CURRENT\2075-01 - LIGHTING.DWG

WAIVERS OF TOWN OF BOXBOROUGH ZONING BYLAWS:
4.4003(1) USE REGULATION SCHEDULE
WAIVER TO PERMIT SINGLE-FAMILY AND MULTI-FAMILY ATTACHED RESIDENTIAL USES NOT OTHERWISE PERMITTED IN THE INDUSTRIAL COMMERCIAL DISTRICT (I.E. THE PROPOSED TWO (2) SINGLE FAMILY DWELLINGS AND THE PROPOSED 244 APARTMENT UNITS IN ELEVEN (11) MULTI-FAMILY BUILDINGS, FOR A TOTAL OF 246 UNITS)
4.4033 USE REGULATION SCHEDULE
WAIVER TO PERMIT A USE WHICH IS NOT OTHERWISE ACCESSORY TO INDUSTRIAL-COMMERCIAL USES, I.E., A CLUBHOUSE/RENTAL OFFICE.
5.5002 DIMENSIONAL SCHEDULE
WAIVER OF REQUIREMENT FOR A MAXIMUM FLOOR AREA RATIO OF 0.10.
6.6004 SURFACE, CIRCULATION, AND LANDSCAPING REQUIREMENTS
WAIVER OF REQUIREMENT THAT AUTOMOBILE PARKING SPACES SHALL NOT BE LESS THAN 10 FEET BY 20 FEET, IN ORDER TO ALLOW PARKING SPACE OF 9 FEET BY 18 FEET.
6.6103 MULTIPLE BUILDINGS ON ONE LOT
WAIVER OF REQUIREMENT THAT WHERE MORE THAN ONE BUILDING IS PROPOSED TO BE BUILT UPON A LOT, THE PLAN SHALL BE REVIEWED BY THE PLANNING BOARD REGARDING ADEQUACY OF ACCESS TO BUILDINGS, IN ORDER TO SUBSTITUTE THE PERMISSION FROM THE ZONING BOARD OF APPEALS GRANTED UNDER THIS COMPREHENSIVE PERMIT.
6.6105 PRIVATE/COMMON DRIVEWAYS IN THE BUSINESS, BUSINESS 1, OFFICE PARK, TOWN CENTER, AND INDUSTRIAL-COMMERCIAL DISTRICTS
WAIVER OF THE REQUIREMENT THAT PRIVATE/COMMON DRIVEWAYS ARE ALLOWED IN THE IC DISTRICT ONLY BY SPECIAL PERMIT OF THE PLANNING BOARD, IN ORDER TO SUBSTITUTE THE PERMISSION FROM THE ZONING BOARD OF APPEALS UNDER THIS COMPREHENSIVE PERMIT.
7.7004(6) SPECIAL REGULATIONS AQUIFER PROTECTION DISTRICT
WAIVER OF REQUIREMENT THAT THERE BE NO DISPOSAL OF SANITARY WASTE TO A SUBSURFACE DISPOSAL SYSTEM IN QUANTITIES EXCEEDING 440 GALLONS PER DAY PER ACRE OF AQUIFER PROTECTION DISTRICT CONTAINED WITHIN THE LOT, IN ORDER TO ALLOW QUANTITIES OF UP TO 750 GALLONS PER DAY PER ACRE OF THE SITE IN THE AQUIFER PROTECTION DISTRICT IN THE EVENT RESERVE LEACHING FIELDS ARE USED.
7.7007(1) DESIGN REQUIREMENTS
WAIVER OF REQUIREMENT THAT WHERE A PORTION OF THE SITE IS LOCATED OUTSIDE OF THE AQUIFER PROTECTION DISTRICT, POTENTIAL POLLUTION SOURCES, SUCH AS ON SITE DISPOSAL SYSTEMS, SHOULD BE LOCATED OUTSIDE THE DISTRICT BOUNDARIES, IN ORDER TO ALLOW RESERVE LEACHING FIELD TO BE LOCATED WITHIN THE AQUIFER PROTECTION DISTRICT.
7.7104(G) AND (H) W-DISTRICT USE REGULATIONS
WAIVER OF REQUIREMENTS FOR SPECIAL PERMIT FOR USE IN THE W-DISTRICT, IN ORDER TO SUBSTITUTE APPROVAL UNDER THIS COMPREHENSIVE PERMIT.
7.7106 SUBMITTALS
WAIVER OF REQUIREMENTS FOR SPECIAL PERMIT APPLICATIONS TO BE PREPARED AND SUBMITTED TO THE BOARD OF APPEALS, IN ORDER TO PERMIT ONE COMPREHENSIVE SUBMISSION TO THE BOARD TO BE ACTED ON UNDER G.L. C. 40B, §21.
7.7109 PROCEDURES
WAIVER OF REQUIREMENT FOR SPECIAL PERMIT APPLICATIONS TO BE PREPARED AND SUBMITTED TO THE BOARD OF APPEALS IN ORDER TO PERMIT A SINGLE COMPREHENSIVE PERMIT SUBMISSION TO THE BOARD TO BE ACTED UPON UNDER G.L. C.40B, §21.
7.7200 LANDS BORDERING THE W-DISTRICT
WAIVER OF REQUIREMENT FOR SPECIAL PERMIT TO PLACE STRUCTURES WITHIN ONE HUNDRED (100') FEET OF THE W-DISTRICT, IN ORDER TO PERMIT CONSTRUCTION OF WARD ROAD AND A FIRE POND WITHIN 100' OF W-DISTRICT.
8.8000 SITE PLAN APPROVAL & DESIGN REVIEW
WAIVER OF REQUIREMENT FOR SITE PLAN REVIEW BY THE PLANNING BOARD FOR THE CONSTRUCTION OF MULTI-FAMILY STRUCTURES AND PARKING AREAS ASSOCIATED WITH MULTI-FAMILY STRUCTURES.
9.9001(2) BUILDING PERMITS
WAIVER OF REQUIREMENT THAT NO BUILDING PERMIT SHALL BE ISSUED BY THE INSPECTOR OF BUILDINGS WITHOUT THE WRITTEN APPROVAL OF A SITE PLAN BY THE PLANNING BOARD.

WAIVERS FROM TOWN OF BOXBOROUGH REGULATIONS FOR THE WETLAND BYLAW:
SECTION 2.5.3.1 PERFORMANCE STANDARDS
WAIVER OF PROHIBITION OF PARKING LOTS, PERMANENT STRUCTURES, AND SANITARY WASTE DISPOSAL SYSTEMS WITHIN ADJACENT LAND RESOURCE AREA, IN ORDER TO ALLOW THE PLACEMENT OF THE PROPOSED SANITARY WASTE DISPOSAL SYSTEM, PARKING LOT, ROAD AND OTHER PERMANENT STRUCTURES WITHIN THE ADJACENT LAND RESOURCE AREA IN ACCORDANCE WITH THE SITE PLAN APPROVED FOR THE PROJECT UNDER THIS COMPREHENSIVE PERMIT.

WAIVERS FROM BOXBOROUGH COMPREHENSIVE PERMIT RULES OF THE ZONING BOARD OF APPEALS:
SECTION 3.02(I) LIST OF REQUESTED EXCEPTIONS
WAIVER OF REQUIREMENT THAT APPLICANT PROVIDES A COMPLETE LIST OF ALL REQUESTED EXCEPTIONS AT THE TIME OF THE INITIAL FILING OF THE APPLICATION IN ORDER TO PERMIT THE LIST TO BE REVISED AS THE PROJECT EVOLVES THROUGH THE HEARING AND APPROVAL PROCESS.

TIMOTHY J. WILLIAMS CIVIL No. 43119 REGISTERED PROFESSIONAL ENGINEER COMMONWEALTH OF MASSACHUSETTS 7/9/15

PROFESSIONAL ENGINEER FOR
ALLEN & MAJOR ASSOCIATES, INC.

REV	DATE	DESCRIPTION
9.	07/08/2015	ISSUED FOR DEFINITIVE SITE PLAN
8.	06/12/2015	REVISED PER FIRE DEPARTMENT COMMENTS
7.	05/15/2015	ISSUED FOR PERMIT
6.	05/05/2015	ISSUED FOR DEP PERMIT APPROVAL
5.	05/04/2015	REVISED FOR PRICING
4.	03/26/2015	REVISED PER TOWN COMMENTS
3.	03/02/2015	ISSUED FOR MEPA
2.	02/27/2015	REVISED PER TOWN COMMENTS
1.	02/12/2015	ISSUED FOR ZONING BOARD OF APPEALS

APPLICANT:
JPI
3 WEST MAIN STREET, SUITE 203
IRVINGTON, NY 10533

PROJECT:
DEFINITIVE SITE PLAN SET
JEFFERSON AT BEAVER BROOK
BOXBOROUGH, MA

PROJECT NO.	2075-01	DATE:	02-11-2015
SCALE:	1"=40'	DWG. NAME:	C2075-10
DESIGNED BY:	SJL	CHECKED BY:	CMQ

PREPARED BY:

ALLEN & MAJOR ASSOCIATES, INC.
civil & structural engineering ◆ land surveying
environmental consulting ◆ landscape architecture
www.allenmajor.com
100 COMMERCE WAY
P.O. BOX 2118
WOBURN MA 01888-0118
TEL: (781) 935-6889
FAX: (781) 935-2896
WOBURN, MA ◆ LAKEVILLE, MA ◆ MANCHESTER, NH

THIS DRAWING HAS BEEN PREPARED IN ELECTRONIC FORMAT. CLIENT/CLIENT'S REPRESENTATIVE OR CONSULTANT MAY BE PROVIDED COPIES OF DRAWINGS AND SPECIFICATIONS ON MAGNETIC MEDIA FOR HIS/HER INFORMATION AND USE FOR SPECIFIC APPLICATION TO THIS PROJECT. DUE TO THE POTENTIAL THAT THE MAGNETIC INFORMATION MAY BE MODIFIED UNINTENTIONALLY OR OTHERWISE, ALLEN & MAJOR ASSOCIATES, INC. MAY REMOVE ALL INDICATION OF THE DOCUMENT'S AUTHORSHIP ON THE MAGNETIC MEDIA. PRINTED REPRESENTATIONS OF THE DRAWINGS AND SPECIFICATIONS ISSUED SHALL BE THE ONLY RECORD COPIES OF ALLEN & MAJOR ASSOCIATES, INC.'S WORK PRODUCT.

DRAWING TITLE:
SITE
LIGHTING PLAN

SHEET No.
C-7C

Copyright©2015 Allen & Major Associates, Inc.
All Rights Reserved

LOCUS PLAN WITH SNOW STORAGE
SCALE: 1"=100'

LEGEND:

- PROPERTY LINE
- SIGN
- BOLLARD
- BUILDING
- PROPOSED FIELDSTONE WALLS
- BUILDING ARCHITECTURE
- CURB
- RETAINING WALL
- CONCRETE SIDEWALK
- ADA ACCESSIBLE RAMP WITH DETECTABLE WARNINGS
- CHAIN LINK FENCE
- TRANSFORMER
- WETLAND DISTURBANCE
- WETLAND REPLICATION
- TEMPORARY WETLAND DISTURBANCE
- APPROX. LIMIT OF CLEARING & PROP. TREELINE TO REMAIN
- SEED MIX A (SEE NOTE #19)
- SEED MIX B (SEE NOTE #20)
- PERENNIALS
- SHRUBS
- DECIDUOUS TREES
- FLOWERING TREES
- EVERGREEN TREES

SNOW STORAGE AREA

NOTES:

1. SNOW WILL BE STOCKPILED ON SITE UNTIL THE ACCUMULATED SNOW CAN BE REMOVED AND DISPOSED OF OFF-SITE. IT WILL BE THE RESPONSIBILITY OF THE SNOW REMOVAL CONTRACTOR TO PROPERLY DISPOSE OF TRANSPORTED SNOW ACCORDING TO MASSACHUSETTS DEP, BUREAU OF RESOURCE PROTECTION – SNOW DISPOSAL GUIDELINE #BRPG01-01, GOVERNING THE PROPER DISPOSAL OF SNOW. IT WILL BE THE RESPONSIBILITY OF THE SNOW REMOVAL CONTRACTOR TO FOLLOW THESE GUIDELINES AND ALL APPLICABLE LAWS AND REGULATIONS.
2. APPROXIMATE TOTAL SNOW STORAGE AREA ON SITE: 25,300± S.F.

PLANTING SCHEDULE-TREES, SHRUBS, GROUNDCOVERS & PERENNIALS

DECIDUOUS TREES

KEY	QUANTITY	BOTANICAL NAME	COMMON NAME	MIN. SIZE	SPACING	COMMENTS
AR	5	ACER RUBRUM 'OCTOBER GLORY'	RED MAPLE	3"–3.5" CAL.	AS SHOWN	B&B
BP	4	BETULA PAPYRIFERA	PAPER BIRCH	3"–3.5" CAL.	AS SHOWN	B&B
FP	6	FRAXINUS PENNSYLVANICA 'PATMORE'	GREEN ASH	3"–3.5" CAL.	AS SHOWN	B&B
GT	7	GLEDITSIA TRICANTHOS INERMIS 'SHADEMASTER'	COMMON HONEYLOCUST	3"–3.5" CAL.	AS SHOWN	B&B
TC	18	TILIA CORDATA	LITTLELEAF LINDEN	3"–3.5" CAL.	AS SHOWN	B&B
ZS	15	ZELKOVA SERRATA 'GREEN VASE'	JAPANESE ZELKOVA	3"–3.5" CAL.	AS SHOWN	B&B

EVERGREEN TREES

KEY	QUANTITY	BOTANICAL NAME	COMMON NAME	MIN. SIZE	SPACING	COMMENTS
CO	4	CHAMAECYPARIS OBTUSA 'CRIPPSII'	GOLDEN HINOKI CYPRESS	4'–6' HT.	AS SHOWN	B&B
JM	6	JUNIPERUS CHINENSIS 'MOUNTBATTEN'	MOUNTBATTEN JUNIPER	5'–7' HT.	AS SHOWN	B&B
PA	10	PICEA ABIES	NORWAY SPRUCE	8'–10' HT.	AS SHOWN	B&B
PG	15	PICEA GLAUCA	BLUE COLORADO SPRUCE	8'–10' HT.	AS SHOWN	B&B
PO	7	PICEA OMORIKA	SERBIAN SPRUCE	6'–8' HT.	AS SHOWN	B&B
PS	9	PINUS STROBUS	EAST WHITE PINE	8'–10' HT.	AS SHOWN	B&B
TE	27	THUJA OCCIDENTALIS 'EMERALD'	EMERALD ARBORVITAE	8'–9' HT.	AS SHOWN	B&B
TO	19	THUJA OCCIDENTALIS MALONYANA AUREA	MALONYANA ARBORVITAE	8'–9' HT.	AS SHOWN	B&B
TR	21	THUJA OCCIDENTALIS ROSENTHALII	ROSENTHAL ARBORVITAE	8'–9' HT.	AS SHOWN	B&B

FLOWERING TREES

KEY	QUANTITY	BOTANICAL NAME	COMMON NAME	MIN. SIZE	SPACING	COMMENTS
CC	7	CERCIS CANADENSIS 'SILVER CLOUD'	EASTERN REDBUD	4'–6' HT.	AS SHOWN	B&B
MP	10	MALUS 'PRAIRIFIRE'	FLOWERING CRABAPPLE	2"–2.5" CAL.	AS SHOWN	B&B
MS	21	MALUS 'SUGAR TYME'	FLOWERING CRABAPPLE	2"–2.5" CAL.	AS SHOWN	B&B
MT	5	MALUS 'THUNDERCHILD'	FLOWERING CRABAPPLE	2"–2.5" CAL.	AS SHOWN	B&B
PJ	8	PYRUS CALLERYANA 'JACZAM'	JACK CALLERY PEAR	6'–7' HT.	AS SHOWN	B&B

SHRUBS

KEY	QUANTITY	BOTANICAL NAME	COMMON NAME	MIN. SIZE	SPACING	COMMENTS
AD	13	AZALEA 'DELAWARE VALLEY WHITE'	AZALEA	1'–1.5' HT.	AS SHOWN	POT
BX	22	BUDDLEIA X 'BLUE CHIP'	BUTTERFLY BUSH	1'–1.5' HT.	AS SHOWN	POT
CM	17	CHAMAECYPARIS PISIFERA 'GOLDEN MOP'	JAPANESE FALSECYPRESS	1.5'–2' HT.	AS SHOWN	B&B
CR	20	CORNUS SERICEA 'BAILEY'S RED'	RED TWIG DOGWOOD	3'–4' HT.	AS SHOWN	POT
FA	15	FORSYTHIA VIRIDESSIMA 'BRONXENSIS'	GREENSTEM FORSYTHIA	1'–1.5' HT.	AS SHOWN	POT
HY	19	HYDRANGEA MACROPHYLLA 'ENDLESS SUMMER'	BIG LEAF HYDRANGEA	2'–3' HT.	AS SHOWN	POT
IG	78	ILEX GLABRA 'SHAMROCK'	INKBERRY	2.5'–3' HT.	AS SHOWN	POT
IV	9	ILEX VERTICILLATA 'JIM DANDY' (MALE) 'RED SPRITE' (FEMALE)	WINTERBERRY	3'–4' HT.	AS SHOWN	PLANT 1 MALE FOR EVERY 3 FEMALE
JC	52	JUNIPERUS CHINENSIS 'SEAGREEN'	CHINESE JUNIPER	1.5–2' HT.	AS SHOWN	POT

SHRUBS

KEY	QUANTITY	BOTANICAL NAME	COMMON NAME	MIN. SIZE	SPACING	COMMENTS
JP	34	JUNIPERUS HORIZONTALIS 'PLUMOSA COMPACTA'	CREEPING JUNIPER	1.5'–2' HT.	AS SHOWN	POT
KL	24	KALMIA LATIFOLIA MYRTIFOLIA 'TINKERBELL'	MINIATURE MOUNTAIN LAUREL	1.5'–2' HT.	AS SHOWN	POT
MY	34	MYRICA PENSYLVANICA	NORTHERN BAYBERRY	4'–6' HT.	AS SHOWN	POT
RC	34	RHODODENDRON 'CHECKMATE'	RHODODENDRON	2.5'–3' HT.	AS SHOWN	POT
RT	16	RHODODENDRON 'TOTTENHAM'	RHODODENDRON	2.5'–3' HT.	AS SHOWN	POT
RR	39	ROSA 'DOUBLE PINK'	KNOCKOUT ROSE	2.5'–3' HT.	AS SHOWN	POT
SJ	23	SPIRAEA JAPONICA 'LITTLE PRINCESS'	JAPANESE SPIREA	1.5'–2' HT.	AS SHOWN	POT
TG	3	TAXUS X MEDIA 'GREENWAVE'	DENSE YEW	4'–5' HT.	AS SHOWN	B&B
VD	5	VIBURNUM DENTATUM 'BLUE MUFFIN'	VIBURNUM	1.5'–2' HT.	AS SHOWN	POT

ORNAMENTAL GRASSES

KEY	QUANTITY	BOTANICAL NAME	COMMON NAME	MIN. SIZE	SPACING	COMMENTS
CF	21	CALAMAGROSTUS ARUNDINACEA 'KARL FORESTER'	FEATHER REED GRASS	3 GAL.	36" O.C.	POT
MM	41	MISCANTHUS SINENSIS 'MORNING LIGHT'	MAIDEN GRASS	2 GAL.	36" O.C.	POT
MS	26	MISCANTHUS SINENSIS 'LITTLE ZEBRA'	MAIDEN GRASS	2 GAL.	36" O.C.	POT
MC	19	MOLINIA CAERULEA 'VARIEGATA'	VARIEGATED PURPLE MOOR GRASS	2 GAL.	18" O.C.	POT
PV	40	PANICUM VIRGATUM 'SHANANDOAH'	SWITCH GRASS	2 GAL.	24" O.C.	POT
PH	92	PENNISETUM ALOPECURIODES 'HAMELN'	DWARF FOUNTAIN GRASS	2 GAL.	24" O.C.	POT

PERENNIALS

KEY	QUANTITY	BOTANICAL NAME	COMMON NAME	MIN. SIZE	SPACING	COMMENTS
AU	120	ALLIUM AFLATUNENSE 'PURPLE SENSATION	GIANT ALLIUM	BULBS	6" O.C.	STAGGERED
AT	30	ASTILBE ARENDSII 'FANAL'	ASTILBE	2 GAL.	18" O.C.	STAGGERED
AN	46	ASTER NOVAE ANGLIAE 'PURPLE DOME'	NEW ENGLAND ASTER	2 GAL.	24" O.C.	STAGGERED
CZ	72	COREOPSIS 'ZAGREB'	ZAGREB TICKSEED	1 GAL.	15" O.C	STAGGERED
EP	17	ECHINACEA PURPUREA 'MAGNUS'	PURPLE CONEFLOWER	2 GAL.	18" O.C	STAGGERED
EC	57	ECHINACEA 'SUMMER SKY'	SUMMER SKY CONEFLOWER	2 GAL.	18" O.C	STAGGERED
GU	4	GUARA LINDHEIMERI 'WHIRLING BUTTERFLIES'	WAND FLOWER	2 GAL.	24" O.C	STAGGERED
HP	33	HEMEROCALLIS 'PARDON ME'	DAYLILY	1 GAL.	18" O.C.	STAGGERED
HR	43	HEMEROCALLIS 'ROSEY RETURNS'	DAYLILY	1 GAL.	18" O.C.	STAGGERED
HB	68	HOSTA 'BLUE CADET'	BLUE CADET HOSTA	2 GAL.	18" O.C.	STAGGERED
HG	55	HOSTA 'GUACAMOLE'	GUACAMOLE HOSTA	2 GAL.	18" O.C.	STAGGERED
LA	29	LAVANDULA ANGUSTIFOLIA 'HIDCOTE'	LAVENDER	2 GAL.	24" O.C.	STAGGERED
LB	60	LEUCANTHEMUM X SUPERBUM 'BECKY'	SHASTA DAISY	2 GAL.	18" O.C.	STAGGERED
LV	85	LIRIOPE MUSCARI 'VARIEGATA'	VARIEGATED LIRIOPE	2 GAL.	18" O.C.	STAGGERED
LS	65	LIRIOPE SPICATA	CREEPING LIRIOPE	2 GAL.	18" O.C.	STAGGERED
MO	27	MONARDA DIDYMA 'GRAND PARADE'	BEE BALM	2 GAL.	18" O.C.	STAGGERED
PL	6	PEROVSKIA ATRIPLICIFOLIA 'LITTLE SPIRE'	RUSSIAN SAGE	3 GAL.	24" O.C.	STAGGERED
RF	32	RUDBECKIA FULGIDA FULGIDA	CONEFLOWER	2 GAL.	18" O.C.	STAGGERED
SE	29	SEDUM 'AUTUMN JOY'	SEDUM	2 GAL.	18" O.C.	STAGGERED
TU	280	TULIPA PINK & WHITE MIXTURE	TULIPS	BULBS	6" O.C.	STAGGERED
VR	9	VERONICA PEDUNCULARIS 'GEORGIA BLUE'	SPEEDWELL	2 GAL.	18" O.C.	STAGGERED
VM	130	VINCA MINOR	MYRTLE	FLATS	10" O.C.	STAGGERED

LANDSCAPE NOTES

1. ALL WORK SHALL BE IN ACCORDANCE WITH THE REQUIREMENTS OF THE TOWN OF BOXBOROUGH, MA.
2. PLANTING PLAN IS DIAGRAMMATIC IN NATURE. FINAL PLACEMENT OF PLANTS TO BE APPROVED BY THE LANDSCAPE ARCHITECT IN THE FIELD.
3. THE CONTRACTOR SHALL BE RESPONSIBLE FOR CONTACTING ALL UTILITY COMPANIES, ANY PERMITTING AGENCIES, AND "DIG-SAFE" (1-888-344-7233) AT LEAST 72 HOURS IN ADVANCE OF ANY WORK THAT WILL REQUIRE EXCAVATION. CONTRACTOR SHALL NOTIFY THE OWNERS REPRESENTATIVE OF NAY CONFLICTS IN WRITING.
4. NO PLANT MATERIAL SHALL BE INSTALLED UNTIL ALL GRADING AND CONSTRUCTION HAS BEEN COMPLETED IN THE IMMEDIATE AREA, ANY TREES NOTED AS "SEAL OR SELECTED SPECIMEN" SHALL BE TAGGED AND SEALED BY THE LANDSCAPE ARCHITECT.
5. ALL TREES SHALL BE BALLED AND BURLAPPED (B&B) UNLESS OTHERWISE NOTED OR APPROVED BY THE OWNER'S REPRESENTATIVE AND LANDSCAPE ARCHITECT.
6. CONTRACTOR SHALL VERIFY QUANTITIES SHOWN ON PLANT LIST. QUANTITIES SHOWN ON PLANS SHALL GOVERN OVER PLANT LIST.
7. ANY PROPOSED PLANT SUBSTITUTIONS MUST BE APPROVED IN WRITING BY OWNER'S REPRESENTATIVE AND LANDSCAPE ARCHITECT
8. ALL PLANT MATERIALS INSTALLED SHALL MEET THE GUIDELINES ESTABLISHED BY THE STANDARDS FOR NURSERY STOCK PUBLISHED BY THE AMERICAN ASSOCIATION OF NURSERYMEN.
9. ALL PLANT MATERIALS SHALL BE GUARANTEED FOR ONE YEAR FOLLOWING DATE OF ACCEPTANCE.
10. ALL DISTURBED AREAS NOT OTHERWISE NOTED SHALL RECEIVE 6" OF SUITABLE LOAM & SEED LAWNS WITH 3:1 OR GREATER SLOPES SHALL BE PROTECTED WITH AN EROSION CONTROL BLANKET.
11. ANY FALL TRANSPLANTING HAZARD PLANTS SHALL BE DUG IN THE SPRING AND STORED FOR FALL PLANTING.
12. TREES SHALL HAVE A MINIMUM CALIPER AS INDICATED ON THE PLANTING SCHEDULE TAKEN ONE FOOT ABOVE THE ROOT CROWN.
13. ALL PLANT BEDS AND TREE SAUCERS TO RECEIVE 3" OF PINE BARK MULCH. GROUND COVER AREAS SHALL RECEIVE 1" OF PINE BARK MULCH
14. ALL DECIDUOUS TREES ADJACENT TO WALKWAYS AND ROADWAYS SHALL HAVE A BRANCHING PATTERN TO ALLOW FOR A MINIMUM OF 7' OF CLEARANCE BETWEEN THE GROUND AND THE LOWEST BRANCH.
15. ALL TREE STAKES SHALL BE STAINED DARK BROWN.
16. CONTRACTOR RESPONSIBLE FOR WATERING, AND RESEEDING OF BARE SPOTS UNTIL A UNIFORM STAND OF VEGETATION IS ESTABLISHED AND ACCEPTED.
17. ALL PARKING ISLANDS PLANTED WITH SHRUBS SHALL HAVE 18" OF TOP SOIL. FINISH GRADE SHALL BE EQUAL TO THE TOP OF CURB.
18. SOIL SAMPLES, TESTS, AND SHOP DRAWINGS SHALL BE PROVIDED TO THE LANDSCAPE ARCHITECT OR THE OWNER FOR APPROVAL PRIOR TO CONSTRUCTION.
19. SEED MIX A: SPREAD NEW ENGLAND EROSION CONTROL/RESTORATION MIX FOR DRY SITES & NEW ENGLAND CONSERVATION/WILDLIFE MIX ON AREAS NOTED ON THE PLAN. MIX EACH SEPARATE MIX TOGETHER AT 50/50 RATIO. (SEE SEED MIX SPECIFICATION ON THIS SHEET)

    SPREAD AT A RATIO OF 1 LB PER 800 SQ. FT. SEED MIX AVAILABLE FROM NEW ENGLAND WETLAND PLANTS, 820 WEST ST., AMHERST, MA, 413-548-8000.

    SEEDED AREAS TO BE TEMPORARILY IRRIGATED UNTIL ESTABLISHMENT AND ACCEPTANCE. CONTRACTOR RESPONSIBLE FOR RE-SEEDING AS NECESSARY AND MAINTENANCE UNTIL ESTABLISHMENT AND ACCEPTANCE. A NON-INVASIVE WINTER RYE MAY BE ADDED TO THE MIX TO TO OBTAIN SOIL STABILIZATION IN THE FALL.
20. SEED MIX B: SPREAD NEW ENGLAND SHOWY WILDFLOWER MIX ON AREAS NOTED ON THE PLAN. SPREAD AT A RATIO OF 1 LB PER 800 SQ. FT. SEED MIX AVAILABLE FROM NEW ENGLAND WETLAND PLANTS, 820 WEST ST., AMHERST, MA, 413-548-8000.

    SEEDED AREAS TO BE TEMPORARILY IRRIGATED UNTIL ESTABLISHMENT AND ACCEPTANCE. CONTRACTOR RESPONSIBLE FOR RE-SEEDING AS NECESSARY AND MAINTENANCE UNTIL ESTABLISHMENT AND ACCEPTANCE. A NON-INVASIVE WINTER RYE MAY BE ADDED TO THE MIX TO TO OBTAIN SOIL STABILIZATION IN THE FALL.
21. ALL PROPOSED LANDSCAPE AREAS INCLUDING MOWED LAWNS, TREES, SHRUB BEDS, AND PERENNIALS SHALL BE PROVIDED WITH WATER EFFICIENT UNDERGROUND IRRIGATION. DESIGN AND INSTALLATION OF IRRIGATION SYSTEM TO BE PERFORMED BY AN APPROVED IRRIGATION DESIGN BUILD CONTRACTOR OR BY AN APPROVED EQUAL, TO BE DETERMINED BY THE OWNERS REPRESENTATIVE AND LANDSCAPE ARCHITECT. IRRIGATION SYSTEM IS TO BE DESIGNED FOR EFFICIENT WATER USAGE INCLUDING: USE OF DRIP IRRIGATION FOR SHRUBS AND PERENNIALS, IRRIGATION SYSTEM WITH HEAD-TO-HEAD COVERAGE, A CENTRAL SHUT-OFF VALVE, AND A RAIN SENSOR TO SHUT OFF IRRIGATION DURING RAIN EVENTS.
22. AN MINIMUM 18" WIDE BARRIER OF 1" GRAY OR TAN PEASTONE SHALL BE INSTALLED IN ALL PLANT BED WHICH ABUT THE BUILDINGS. NO MULCH IS ALLOWED WITHIN 18" OF ALL BUILDINGS PER THE LATEST EXECUTIVE OFFICE OF PUBLIC SAFETY AND SECURITY DEPARTMENT OF FIRE SERVICES REGULATION (527 CMR 17.00). INSTALL 6" DEEP OF PEASTONE WITH MIRAFI WEED FABRIC BENEATH AND STEEL EDGING BETWEEN THE PEASTONE AND ADJACENT MULCH BED.

GENERAL NOTES:

1. THE LOCATIONS OF EXISTING UNDERGROUND UTILITIES ARE SHOWN IN AN APPROXIMATE WAY ONLY AND HAVE NOT BEEN INDEPENDENTLY VERIFIED BY THE OWNER OR IT'S REPRESENTATIVE. THE CONTRACTOR SHALL DETERMINE THE EXACT LOCATION OF ALL EXISTING UTILITIES BEFORE COMMENCING WORK, AND AGREES TO BE FULLY RESPONSIBLE FOR ANY AND ALL DAMAGES WHICH MIGHT BE OCCASIONED BY THE CONTRACTOR'S FAILURE TO EXACTLY LOCATE AND PRESERVE ANY AND ALL UNDERGROUND UTILITIES.
2. ALL LANDSCAPED AREAS WITH SHRUBS, TREES, AND PERENNIALS TO HAVE 18" MINIMUM DEPTH OF TOPSOIL. TWO FEET OF TOPSOIL AROUND TREES AND SHRUBS DOES NOT INCLUDE AMENDED PLANTING SOIL WITHIN TREE / SHRUB PIT FOR FULL DEPTH OF ROOTBALLS. SEE PLANTING DETAILS FOR PLANTING DEPTH AT SHRUBS AND TREES. ALL AREAS OF LOAM AND SEED TO HAVE 6" MINIMUM DEPTH OF TOPSOIL. TOPSOIL TO BE TESTED BY CONTRACTOR, AND APPROVED BY A&M PRIOR TO PURCHASE AND OR PLACEMENT. GENERAL CONTRACTOR, DEMOLITION CONTRACTOR, AND LANDSCAPE CONTRACTOR TO COORDINATE PROPER DEPTH OF EXISTING MATERIAL REMOVAL ACROSS SITE SO THAT 18" MINIMUM AND 6" MINIMUM DEPTHS OF PROPOSED TOPSOIL NOTED ABOVE ARE MET AT NO ADDITIONAL COST TO OWNER. SEE TOPSOIL DETAIL.
3. THE INFORMATION SHOWN ON THIS PLAN IS THE SOLE PROPERTY OF ALLEN & MAJOR ASSOCIATES, INC. IT'S INTENDED USE IS TO PROVIDE INFORMATION. ANY ALTERATION, MISUSE, OR RECALCULATION OF INFORMATION OR DATA WITHOUT THE EXPRESSED, WRITTEN CONSENT OF ALLEN & MAJOR ASSOCIATES, INC. IS STRICTLY PROHIBITED.

DIG SAFE

BEFORE YOU DIG
CALL 811 OR
1-888-DIG-SAFE
1-888-344-7233

GRAPHIC SCALE

100 0 50 100 200 400

(IN FEET)
1 inch = 100 ft.

N:\PROJECTS\2075-01\CIVIL\DRAWINGS\CURRENT\2075-01 – LANDSCAPE.DWG

JPI

WAIVERS OF TOWN OF BOXBOROUGH ZONING BYLAWS:
4.4003(1) USE REGULATION SCHEDULE
WAIVER TO PERMIT SINGLE-FAMILY AND MULTI-FAMILY ATTACHED RESIDENTIAL USES NOT OTHERWISE PERMITTED IN THE INDUSTRIAL COMMERCIAL DISTRICT (I.E., THE PROPOSED TWO (2) SINGLE FAMILY DWELLINGS AND THE PROPOSED 244 APARTMENT UNITS IN ELEVEN (11) MULTI-FAMILY BUILDINGS, FOR A TOTAL OF 246 UNITS)
4.4033 USE REGULATION SCHEDULE
WAIVER TO PERMIT A USE WHICH IS NOT OTHERWISE ACCESSORY TO INDUSTRIAL-COMMERCIAL USES, I.E., A CLUBHOUSE/RENTAL OFFICE.
5.5002 DIMENSIONAL SCHEDULE
WAIVER OF REQUIREMENT FOR A MAXIMUM FLOOR AREA RATIO OF 0.10.
6.6004 SURFACE, CIRCULATION, AND LANDSCAPING REQUIREMENTS
WAIVER OF REQUIREMENT THAT AUTOMOBILE PARKING SPACES SHALL NOT BE LESS THAN 10 FEET BY 20 FEET, IN ORDER TO ALLOW PARKING SPACE OF 9 FEET BY 18 FEET.
6.6103 MULTIPLE BUILDINGS ON ONE LOT
WAIVER OF REQUIREMENT THAT WHERE MORE THAN ONE BUILDING IS PROPOSED TO BE BUILT UPON A LOT, THE PLAN SHALL BE REVIEWED BY THE PLANNING BOARD REGARDING ADEQUACY OF ACCESS TO BUILDINGS, IN ORDER TO SUBSTITUTE THE PERMISSION FROM THE ZONING BOARD OF APPEALS GRANTED UNDER THIS COMPREHENSIVE PERMIT.
6.6105 PRIVATE/COMMON DRIVEWAYS IN THE BUSINESS, BUSINESS 1, OFFICE PARK, TOWN CENTER, AND INDUSTRIAL-COMMERCIAL DISTRICTS
WAIVER OF THE REQUIREMENT THAT PRIVATE/COMMON DRIVEWAYS ARE ALLOWED IN THE IC DISTRICT ONLY BY SPECIAL PERMIT OF THE PLANNING BOARD, IN ORDER TO SUBSTITUTE THE PERMISSION FROM THE ZONING BOARD OF APPEALS UNDER THIS COMPREHENSIVE PERMIT.
7.7004(G) SPECIAL REGULATIONS AQUIFER PROTECTION DISTRICT
WAIVER OF REQUIREMENT THAT THERE BE NO DISPOSAL OF SANITARY WASTE TO A SUBSURFACE DISPOSAL SYSTEM IN QUANTITIES EXCEEDING 440 GALLONS PER DAY PER ACRE OF AQUIFER PROTECTION DISTRICT CONTAINED WITHIN THE LOT, IN ORDER TO ALLOW QUANTITIES OF UP TO 750 GALLONS PER DAY PER ACRE OF THE SITE IN THE AQUIFER PROTECTION DISTRICT IN THE EVENT RESERVE LEACHING FIELDS ARE USED.
7.7007(1) DESIGN REQUIREMENTS
WAIVER OF REQUIREMENT THAT WHERE A PORTION OF THE SITE IS LOCATED OUTSIDE OF THE AQUIFER PROTECTION DISTRICT, POTENTIAL POLLUTION SOURCES, SUCH AS ON SITE DISPOSAL SYSTEMS, SHOULD BE LOCATED OUTSIDE THE DISTRICT BOUNDARIES, IN ORDER TO ALLOW RESERVE LEACHING FIELD TO BE LOCATED WITHIN THE AQUIFER PROTECTION DISTRICT.
7.7104(G) AND (H) W-DISTRICT USE REGULATIONS
WAIVER OF REQUIREMENTS FOR SPECIAL PERMIT FOR USE IN THE W-DISTRICT, IN ORDER TO SUBSTITUTE APPROVAL UNDER THIS COMPREHENSIVE PERMIT.
7.7106 SUBMITTALS
WAIVER OF REQUIREMENTS FOR SPECIAL PERMIT APPLICATIONS TO BE PREPARED AND SUBMITTED TO THE BOARD OF APPEALS, IN ORDER TO PERMIT ONE COMPREHENSIVE SUBMISSION TO THE BOARD TO BE ACTED ON UNDER G.L. C. 40B, §21.
7.7109 PROCEDURES
WAIVER OF REQUIREMENT FOR SPECIAL PERMIT APPLICATIONS TO BE PREPARED AND SUBMITTED TO THE BOARD OF APPEALS IN ORDER TO PERMIT A SINGLE COMPREHENSIVE PERMIT SUBMISSION TO THE BOARD TO BE ACTED UPON UNDER G.L. C.40B, §21.
7.7200 LANDS BORDERING THE W-DISTRICT
WAIVER OF REQUIREMENT FOR SPECIAL PERMIT TO PLACE STRUCTURES WITHIN ONE HUNDRED (100') FEET OF THE W-DISTRICT, IN ORDER TO PERMIT CONSTRUCTION OF WARD ROAD AND A FIRE POND WITHIN 100' OF W-DISTRICT.
8.8000 SITE PLAN APPROVAL & DESIGN REVIEW
WAIVER OF REQUIREMENT FOR SITE PLAN REVIEW BY THE PLANNING BOARD FOR THE CONSTRUCTION OF MULTI-FAMILY STRUCTURES AND PARKING AREAS ASSOCIATED WITH MULTI-FAMILY STRUCTURES.
9.9001(2) BUILDING PERMITS
WAIVER OF REQUIREMENT THAT NO BUILDING PERMIT SHALL BE ISSUED BY THE INSPECTOR OF BUILDINGS WITHOUT THE WRITTEN APPROVAL OF A SITE PLAN BY THE PLANNING BOARD.

WAIVERS FROM TOWN OF BOXBOROUGH REGULATIONS FOR THE WETLAND BYLAW:
SECTION 2.5.3.1 PERFORMANCE STANDARDS
WAIVER OF PROHIBITION OF PARKING LOTS, PERMANENT STRUCTURES, AND SANITARY WASTE DISPOSAL SYSTEMS WITHIN ADJACENT LAND RESOURCE AREA, IN ORDER TO ALLOW THE PLACEMENT OF THE PROPOSED SANITARY WASTE DISPOSAL SYSTEM, PARKING LOT, ROAD AND OTHER PERMANENT STRUCTURES WITHIN THE ADJACENT LAND RESOURCE AREA IN ACCORDANCE WITH THE SITE PLAN APPROVED FOR THE PROJECT UNDER THIS COMPREHENSIVE PERMIT.

WAIVERS FROM BOXBOROUGH COMPREHENSIVE PERMIT RULES OF THE ZONING BOARD OF APPEALS:
SECTION 3.02(I) LIST OF REQUESTED EXCEPTIONS
WAIVER OF REQUIREMENT THAT APPLICANT PROVIDES A COMPLETE LIST OF ALL REQUESTED EXCEPTIONS AT THE TIME OF THE INITIAL FILING OF THE APPLICATION IN ORDER TO PERMIT THE LIST TO BE REVISED AS THE PROJECT EVOLVES THROUGH THE HEARING AND APPROVAL PROCESS.

COMMONWEALTH OF MASSACHUSETTS
TIMOTHY J. WILLIAMS
CIVIL
No.43119
REGISTERED PROFESSIONAL ENGINEER
7/8/15

PROFESSIONAL ENGINEER FOR
ALLEN & MAJOR ASSOCIATES, INC.

REV	DATE	DESCRIPTION
9.	07/08/2015	ISSUED FOR DEFINITIVE SITE PLAN
8.	06/12/2015	REVISED PER FIRE DEPARTMENT COMMENTS
7.	05/15/2015	ISSUED FOR PERMIT
6.	05/05/2015	ISSUED FOR DEP PERMIT APPROVAL
5.	05/04/2015	REVISED FOR PRICING
4.	03/26/2015	REVISED PER TOWN COMMENTS
3.	03/02/2015	ISSUED FOR MEPA
2.	02/27/2015	REVISED PER TOWN COMMENTS
1.	02/12/2015	ISSUED FOR ZONING BOARD OF APPEALS

APPLICANT:
JPI
3 WEST MAIN STREET, SUITE 203
IRVINGTON, NY 10533

PROJECT:
DEFINITIVE SITE PLAN SET
JEFFERSON AT BEAVER BROOK
BOXBOROUGH, MA

PROJECT NO.	2075-01	DATE:	02-11-2015
SCALE:	1"=100'	DWG. NAME:	C2075-10
DESIGNED BY:	JG/SJL	CHECKED BY:	RB/CMQ

PREPARED BY:

ALLEN & MAJOR
ASSOCIATES, INC.
civil & structural engineering ◆ land surveying
environmental consulting ◆ landscape architecture
www.allenmajor.com
100 COMMERCE WAY
P.O. BOX 2118
WOBURN MA 01888-0118
TEL: (781) 935-6889
FAX: (781) 935-2896
WOBURN, MA ◆ LAKEVILLE, MA ◆ MANCHESTER, NH

THIS DRAWING HAS BEEN PREPARED IN ELECTRONIC FORMAT. CLIENT/CLIENT'S REPRESENTATIVE OR CONSULTANT MAY BE PROVIDED COPIES OF DRAWINGS AND SPECIFICATIONS ON MAGNETIC MEDIA FOR HIS/HER INFORMATION AND USE FOR SPECIFIC APPLICATION TO THIS PROJECT. DUE TO THE POTENTIAL THAT THE MAGNETIC INFORMATION MAY BE MODIFIED UNINTENTIONALLY OR OTHERWISE, ALLEN & MAJOR ASSOCIATES, INC. MAY REMOVE ALL INDICATION OF THE DOCUMENT'S AUTHORSHIP ON THE MAGNETIC MEDIA. PRINTED REPRESENTATIONS OF THE DRAWINGS AND SPECIFICATIONS ISSUED SHALL BE THE ONLY RECORD COPIES OF ALLEN & MAJOR ASSOCIATES, INC.'S WORK PRODUCT.

DRAWING TITLE: **LANDSCAPE & SNOW STORAGE PLAN**

SHEET No. **C-8A**

Copyright©2015 Allen & Major Associates, Inc.
All Rights Reserved

DETAIL PLAN A
SCALE: 1" = 40'

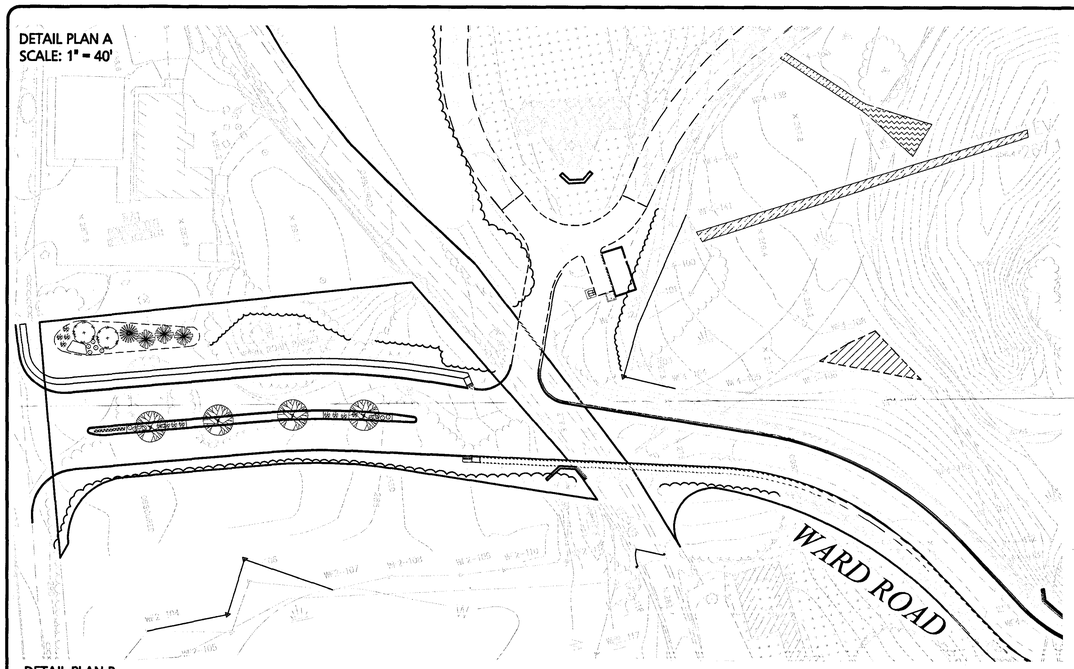

DETAIL PLAN B
SCALE: 1"=20'

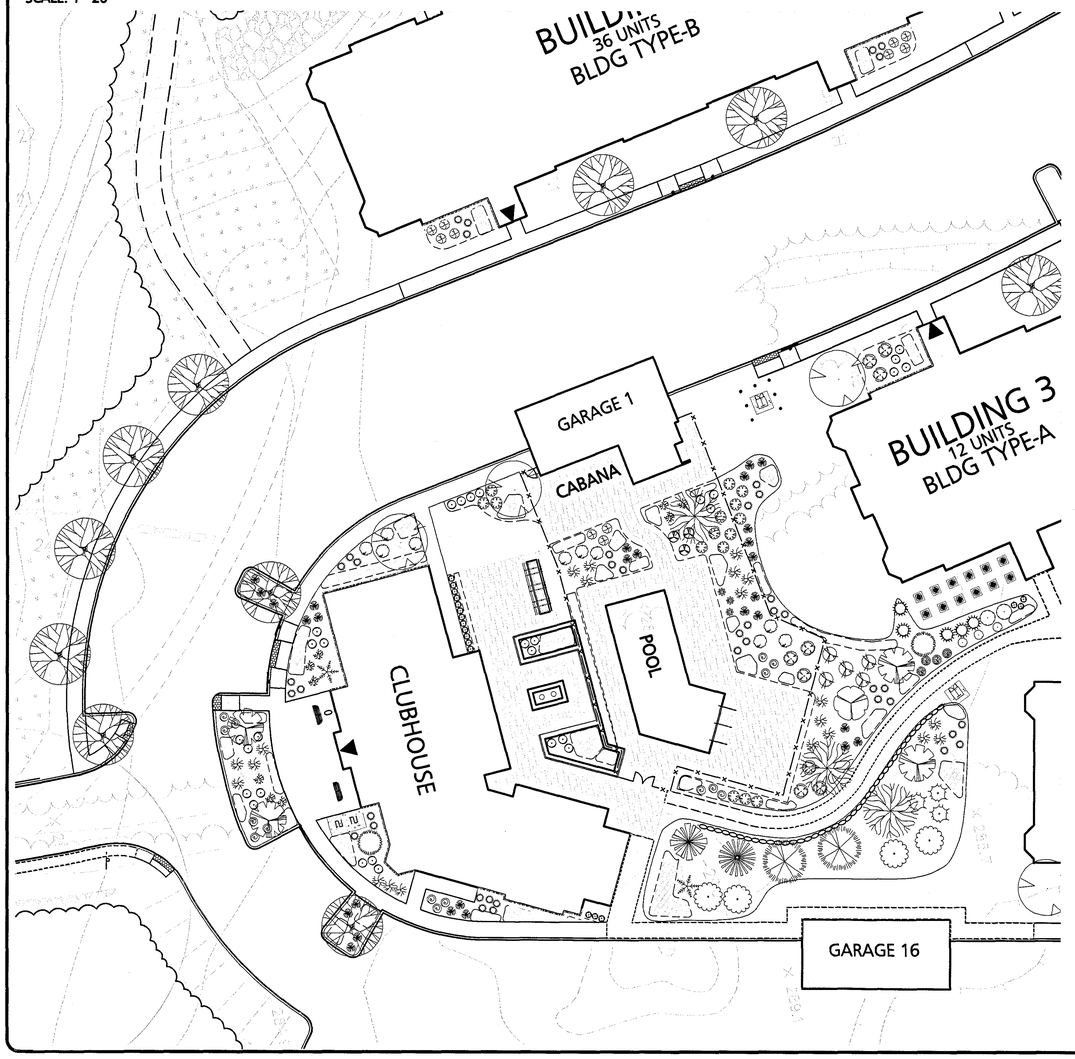

TOWN OF BOXBOROUGH, MA, ZONING SUMMARY:

REQUIRED:
6200 LANDSCAPING, SCREENING, AND OUTDOOR LIGHTING
6201 YARDS
EXCEPT AS PROVIDED ELSEWHERE IN THIS BYLAW, EVERY REQUIRED FRONT YARD, AS DEFINED HEREIN, SHALL BE MAINTAINED AS PERMANENT OPEN SPACE IN GRASS, GROUND COVER, TREES, PLANTINGS, SHRUBS, AND NATURAL ELEMENTS OF THE SITE, AND SHALL REMAIN FREE OF ANY BUILDINGS, ACCESSORY BUILDINGS, OR PARKING AREAS.
BUILDINGS, OR PARKING AREAS.

(1) IN ANY BUSINESS, OFFICE PARK, OR INDUSTRIAL–COMMERCIAL DISTRICT, THE REQUIRED FRONT YARD SETBACK MAY NOT BE USED FOR PARKING. A LANDSCAPED AREA SHALL BE REQUIRED FOR AT LEAST THE DEPTH OF THE FRONT YARD SETBACK BEGINNING AT THE STREET LINE AND EXTENDING THE FULL LENGTH OF THE FRONTAGE UNINTERRUPTED EXCEPT FOR PERMITTED ENTRANCE AND EXIT DRIVES. IN A BUSINESS DISTRICT THE SIDE AND REAR YARD SETBACKS MAY BE USED FOR PARKING PROVIDED THAT NO PARKING IS LOCATED WITHIN 10 FEET OF THE LOT LINE. IN AN OFFICE PARK OR INDUSTRIAL–COMMERCIAL DISTRICT THE SIDE AND REAR YARD SETBACKS SHALL NOT BE USED FOR PARKING.

PROVIDED:
NO PARKING IS PROVIDED WITHIN ANY FRONT, SIDE, OR REAR YARD SETBACK. WHERE POSSIBLE, NATURAL EXISTING ELEMENTS OF THE SITE (VEGETATION) WITHIN THE REQUIRED FRONT SETBACK HAVE REMAINED. IN ADDITION, AREAS OF OPEN SPACE WITH GRASS, TREES, PLANTINGS, SHRUBS HAVE BEEN MAINTAINED WITHIN THE FRONT YARD SETBACK AREA.

REQUIRED:
6202 SCREENING
WHERE ANY OF THE USES LISTED BELOW OCCUR ADJACENT TO ANY RESIDENTIAL OR INSTITUTIONAL USE, OR TO A LOT IN A RESIDENTIAL DISTRICT, THERE SHALL BE PROVIDED A DENSE SCREEN WITHIN THE REQUIRED YARD AREA, AROUND THE PARTICULAR USE, WHICHEVER IS APPROPRIATE AS DETERMINED BY THE INSPECTOR OF BUILDINGS. ALL SUCH SCREENING SHALL BE MAINTAINED BY THE OWNER IN ASIGHTLY CONDITION AT ALL TIMES. THE BOARD OF APPEALS MAY, BY SPECIAL PERMIT, WAIVE OR REDUCE THE ABOVE REQUIRED SCREENING REQUIREMENTS WHERE IT IS EVIDENT THAT, BECAUSE OF TOPOGRAPHY OR OTHER CONDITIONS PECULIAR TO THE SITE, A LESSER AMOUNT OF SCREENING WOULDNOT TEND TO INCREASE NUISANCE, REDUCE PROPERTY VALUES OR AMENITIES, OR INCREASE HAZARDS TO LIFE, HEALTH OR PUBLIC SAFETY.
(1) THE FOLLOWING USES SHALL BE SCREENED AS PROVIDED HEREIN:
  (A) PARKING AREAS OR OFF–STREET LOADING AREAS.
(2) THE SCREEN SHALL CONSIST OF:
  (A) NATURAL MATERIALS ON THE SITE, INCLUDING EXISTING TREES AND WOODS, AT LEAST THREE FEET IN HEIGHT AT THE TIME OF PLANTING AND WHICH WILL NORMALLY AT MATURITY REACH AT LEAST FIVE FEET IN HEIGHT; OR,
  (B) A WALL OR FENCE NOT MORE THAN EIGHT FEET HIGH CONSTRUCTED OF DURABLE MATERIALS AT LEAST FIFTY PERCENT OPAQUE, SUPPLEMENTED WITH PLANTINGS, TREES, GRASS, AND OTHER LANDSCAPE ELEMENTS.
(3) WHERE THE PROPOSED USE IS LOCATED IN THE OFFICE PARK OR THE INDUSTRIAL–COMMERCIAL DISTRICT, A CONTINUOUS BUFFER, LANDSCAPED UTILIZING NATURAL FEATURES AND PLANTINGS TO PROVIDE AN EFFECTIVE SCREEN FOR THE PROPOSED OPERATION, SHALL BE MAINTAINED WITHIN ALL REQUIRED YARDS OR SETBACK AREAS. NOTWITHSTANDING ANYTHING IN THIS BYLAW TO THE CONTRARY, NO PARKING AREA SHALL BE CONTAINED WITHIN THIS BUFFER.

PROVIDED:
A CONTINUOUS LANDSCAPE BUFFER SCREEN UTILIZING NATURAL FEATURES INCLUDING EXISTING WOODS, AND PROPOSED EVERGREEN PLANTINGS HAS BEEN PROVIDED WITHIN ALL REQUIRED YARDS AND SETBACK AREAS. NO PARKING IS CONTAINED WITHIN THIS BUFFER.

LOAM AND SEEDING NOTES:

CONTRACTOR SHALL SEED ALL DISTURBED AREAS NOT NOTED TO RECEIVE OTHER MATERIALS, AND AT AREAS SHOWN ON THE PLAN PER SPECIFICATIONS BELOW

SCIENTIFIC NAME	COMMON NAME	PROPORTION BY WEIGHT	PERCENT PURITY	PERCENT GERMINATION
FESTUCA RUBRA "RUBRA"	CREEPING RED FESCUE	37%	95%	90%
PAO PRAENTENSIS "BARON"	BARON KENTUCKY BLUEGRASS	40%	85%	90%
LOLIUM PERENNE "PALMER"	PALMER PERENNIAL RYEGRASS	15%	95%	90%
FESTUCA RUBRA COMMUTATA WILMA	WILMA CHEWINGS	8%	95%	80%

1. SEED TO BE SPREAD AT MINIMUM RATE OF 5 LBS. PER 1000 SQ. FT.
2. SEEDING TO BE COMPLETED "IN SEASON" BETWEEN APRIL 1 TO JUNE 15 OR AUGUST 15 TO OCTOBER 1, EXCEPT FOR RESEEDING OF BARE SPOTS. IF UNABLE TO SEED WITHIN THESE TIMEFRAMES, CONTRACTOR TO INSTALL EROSION CONTROL MATS ON ALL SLOPES 3:1 AND OVER, HYDROSEED ALL EXPOSED AREAS, ADD SOIL STABILIZER "FLUX TERRA HP–FGM SOIL STABILIZER" AS MANUFACTURED BY "PROFILE" TO HYDROSEED (AT RATE OF 3,000 LBS PER ACRE), AT NO ADDITIONAL COST TO THE OWNER. CONTRACTOR TO COMPLETE ALL ABOVE "OUT OF SEASON" REQUIREMENTS AND THEN ALSO BE RESPONSIBLE FOR RE–GRADING AND RE–SEEDING ALL DISTURBED, ERODED, OR BARE SPOTS WITHIN NEXT CLOSEST PLANTING SEASON IN FALL OR SPRING AT NO ADDITIONAL COST TO OWNER. CONTRACTOR RESPONSIBLE FOR ALL MAINTENANCE UNTIL FINAL ACCEPTANCE OF LAWN AREAS INCLUDING: WATERING, ADDING FERTILIZERS AND LIME AND MOWING AT NO ADDITIONAL COST TO OWNER.
3. COMMERCIAL FERTILIZER SHALL BE APPLIED AT THE RATE OF 25 POUNDS PER 1000 SQ. FT. OR AS RECOMMENDED BY THE TESTING AGENCY. LIME TO BE SPREAD AT THE RATE OF 100 POUNDS PER 1000 SQ. FT OR AS RECOMMENDED BY THE TESTING AGENCY. COMMERCIAL FERTILIZER SHALL BE A COMPLETE FERTILIZER CONTAINING AT LEAST 50% OF THE NITROGEN OF WHICH IS DERIVED FROM NATURAL ORGANIZE SOURCES OF UREAFORM. IT SHALL CONTAIN THE FOLLOWING PERCENTAGES BY WEIGHT: NITROGEN (N) 10%, PHOSPHORUS (P) 6%, POTASH (K) 4%. LIME SHALL BE AN APPROVED AGRICULTURAL LIMESTONE CONTAINING NOT LESS THAN 85% OF TOTAL CARBONATES. LIMESTONE SHALL BE GROUND TO SUCH FINENESS THAT 50% WILL PASS A 100 MESH SIEVE AND 90% WILL PASS THROUGH A 20 MESH SIEVE.
4. LAWN AREAS TO BE SEEDED BY SOWING EVENLY WITH AN APPROVED MECHANICAL SEEDER AT THE RATE OF TEN POUNDS PER 1000 SQUARE FEET.
5. CONTRACTOR RESPONSIBLE FOR WATERING, MOWING, AND RESEEDING OF LAWN BARE SPOTS UNTIL A UNIFORM, HEALTHY STAND OF GRASS IS ESTABLISHED AND ACCEPTED.

(SEE NOTES ON C–8A FOR APPLICATION RATE OF SEED MIXES)

NEW ENGLAND EROSION CONTROL / RESTORATION MIX FOR DRY SITES:

1.	CREEPING RED FESCUE	FESTUCA RUBRA
2.	CANADA WILD RYE	ELYMUS CANADENSIS
3.	ANNUAL RYEGRASS	LOLIUM MULTIFLORUM
4.	RYEGRASS	LOLIUM PERENNE PERREN
5.	BLUE GRAMA	BOUTELOUA GRACILIS
6.	LITTLE BLUESTEM	SCHIZACHYRIUM SCOPARI
7.	INDIAN GRASS	SORGHASTRUM NUTANS
8.	ROUGH BENTGRASS/TICKLEGRASS	AGROSTIS SCABRA
9.	UPLAND BENTGRASS	AGROSTIS PERENNANS

NEW ENGLAND CONSERVATION/WILDLIFE MIX:

1.	VIRGINIA WILD RYE	ELYMUS VIRGINICUS
2.	LITTLE BLUESTEM	SCHIZACHYRIUM SCOPARIUM
3.	BIG BLUESTEM	ANDROPOGON GERARDII
4.	CREEPING RED FESCUE	FESTUCA RUBRA
5.	SWITCH GRASS	PANICUM VIRGATUM
6.	PARTRIDGE PEA	CHAMAECRISTA FASCICULATA
7.	DEER TONGUE	PANICUM CLANDESTINUM
8.	INDIAN GRASS	SORGHASTRUM NUTANS
9.	OX EYE SUNFLOWER	HELIOPSIS HELIANTHOIDES
10.	COMMON MILKWEED	ASCLEPIAS SYRIACA
11.	SPOTTED JOE PYE WEED	EUPATORIUM MACULATUM
12.	GRASS LEAVED GOLDENROD	EUTHAMIA GRAMINIFOLIA
13.	BLUE VERVAIN	VERBENA HASTATA
14.	NEW ENGLAND ASTER	ASTER NOVAE–ANGLIAE
15.	EARLY GOLDENROD	SOLIDAGO JUNCEA

NEW ENGLAND SHOWY WILDFLOWER MIX:

1.	LITTLE BLUESTEM	SCHIZACHYRIUM SCOPARIUM
2.	CREEPING RED FESCUE	FESTUCA RUBRA
3.	INDIAN GRASS	SORGHASTRUM NUTANS
4.	PARTRIDGE PEA	CHAMAECRISTA FASCICULATA
5.	SHOWY TICK TREFOIL	DESMODIUM CANADENSE
6.	CANADA WILD RYE	ELYMUS CANADENSIS
7.	VIRGINIA WILD RYE	ELYMUS VIRGINICUS
8.	COMMON MILKWEED	ASCLEPIAS SYRIACA
9.	BEARD TONGUE	PENSTEMON DIGITALIS
10.	GOLDEN ALEXANDERS	ZIZIA AUREA
11.	BLACK EYED SUSAN	RUDBECKIA HIRTA
12.	LANCE LEAVED COREOPSIS	COREOPSIS LANCEOLATA
13.	OX EYE SUNFLOWER	HELIOPSIS HELIANTHOIDES
14.	COMMON SNEEZEWEED	HELENIUM AUTUMNALE
15.	MARSH BLAZING STAR	LIATRIS SPICATA
16.	CUP PLANT	SILPHIUM PERFOLIATUM
17.	BLUE VERVAIN	VERBENA HASTATA
18.	SMOOTH BLUE ASTER	ASTER LAEVIS
19.	NEW ENGLAND ASTER	ASTER NOVAE–ANGLIAE
20.	WILD BLUE FALSE INDIGO	BAPTISIA AUSTRALIS
21.	SPOTTED JOE PYE WEED	EUPATORIUM MACULATUM
22.	GRASS LEAVED GOLDENROD	EUTHAMIA GRAMINIFOLIA
23.	WILD BERGAMOT	MONARDA FISTULOSA
24.	EVENING PRIMROSE	OENOTHERA BIENNIS
25.	OHIO SPIDERWORT	TRADESCANTIA OHIENSIS
26.	EARLY GOLDENROD	SOLIDAGO JUNCEA

DIG SAFE

BEFORE YOU DIG CALL 811 OR 1–888–DIG–SAFE 1–888–344–7233

GRAPHIC SCALE

40 0 20 40 80 160

(IN FEET)
1 inch = 40 ft.

N:\PROJECTS\2075–01\CIVIL\DRAWINGS\CURRENT\2075–01 – LANDSCAPE.DWG

LEGEND:

- PROPERTY LINE
- SIGN
- BOLLARD
- BUILDING
- PROPOSED FIELDSTONE WALLS
- BUILDING ARCHITECTURE
- CURB
- RETAINING WALL
- CONCRETE SIDEWALK
- ADA ACCESSIBLE RAMP WITH DETECTABLE WARNINGS
- CHAIN LINK FENCE
- TRANSFORMER
- WETLAND DISTURBANCE
- WETLAND REPLICATION
- TEMPORARY WETLAND DISTURBANCE
- APPROX. LIMIT OF CLEARING & PROP. TREELINE TO REMAIN
- SEED MIX A (SEE NOTE #19)
- SEED MIX B (SEE NOTE #20)
- PERENNIALS
- SHRUBS
- DECIDUOUS TREES
- FLOWERING TREES
- EVERGREEN TREES

GENERAL NOTES:

1. THE LOCATIONS OF EXISTING UNDERGROUND UTILITIES ARE SHOWN IN AN APPROXIMATE WAY ONLY AND HAVE NOT BEEN INDEPENDENTLY VERIFIED BY THE OWNER OR IT'S REPRESENTATIVE. THE CONTRACTOR SHALL DETERMINE THE EXACT LOCATION OF ALL EXISTING UTILITIES BEFORE COMMENCING WORK, AND AGREES TO BE FULLY RESPONSIBLE FOR ANY AND ALL DAMAGES WHICH MIGHT BE OCCASIONED BY THE CONTRACTOR'S FAILURE TO EXACTLY LOCATE AND PRESERVE ANY AND ALL UNDERGROUND UTILITIES.
2. ALL LANDSCAPED AREAS WITH SHRUBS, TREES, AND PERENNIALS TO HAVE 18" MINIMUM DEPTH OF TOPSOIL. TWO FEET OF TOPSOIL AROUND TREES AND SHRUBS DOES NOT INCLUDE AMENDED PLANTING SOIL WITHIN TREE / SHRUB PIT FOR FULL DEPTH OF ROOTBALLS. SEE PLANTING DETAILS FOR PLANTING DEPTH AT SHRUBS AND TREES. ALL AREAS OF LOAM AND SEED TO HAVE 6" MINIMUM DEPTH OF TOPSOIL. TOPSOIL TO BE TESTED BY CONTRACTOR, AND APPROVED BY A&M PRIOR TO PURCHASE AND OR PLACEMENT. GENERAL CONTRACTOR, DEMOLITION CONTRACTOR, AND LANDSCAPE CONTRACTOR TO COORDINATE PROPER DEPTH OF EXISTING MATERIAL REMOVAL ACROSS SITE SO THAT 18" MINIMUM AND 6" MINIMUM DEPTHS OF PROPOSED TOPSOIL NOTED ABOVE ARE MET AT NO ADDITIONAL COST TO OWNER. SEE TOPSOIL DETAIL.
3. THE INFORMATION SHOWN ON THIS PLAN IS THE SOLE PROPERTY OF ALLEN & MAJOR ASSOCIATES, INC. IT'S INTENDED USE IS TO PROVIDE INFORMATION. ANY ALTERATION, MISUSE, OR RECALCULATION OF INFORMATION OR DATA WITHOUT THE EXPRESSED, WRITTEN CONSENT OF ALLEN & MAJOR ASSOCIATES, INC. IS STRICTLY PROHIBITED.
4. CONTRACTOR TO COORD. WITH OWNER ON SCOPE OF WORK FOR VISTA PRUNING OF EXISTING TREES ON APPLICANTS PROPERTY FOR VIEW OF HORSE FARM. VISTA PRUNING SCOPE TO ONLY INCLUDE TRIMMING OF SOME TREE LIMBS AND REMOVAL OF SOME LIMITED SMALL BRUSH, NO TREE REMOVAL.
5. PROPOSED FIELDSTONE WALLS TO BE CONSTRUCTED FROM EXISTING ONSITE WALL MATERIAL. DEMOLITION CONTRACTOR TO COORDINATE WITH LANDSCAPE AND SITE CONTRACTORS ON SALVAGED STONE WALL MATERIAL. SEE EROSION CONTROL PLAN NOTE AND FIELDSTONE WALL CONSTRUCTION DETAIL. UTILIZE BEST AVAILABLE EXISTING STONES AND KEEP EXISTING WEATHERED FACE OF STONE ON EXPOSED SIDE OF PROPOSED WALLS.

JPI

WAIVERS OF TOWN OF BOXBOROUGH ZONING BYLAWS:
4.4003(1) USE REGULATION SCHEDULE
WAIVER TO PERMIT SINGLE–FAMILY AND MULTI–FAMILY ATTACHED RESIDENTIAL USES NOT OTHERWISE PERMITTED IN THE INDUSTRIAL COMMERCIAL DISTRICT (I.E. THE PROPOSED TWO (2) SINGLE FAMILY DWELLINGS AND THE PROPOSED 244 APARTMENT UNITS IN ELEVEN (11) MULTI–FAMILY BUILDINGS, FOR A TOTAL OF 246 UNITS)
4.4033 USE REGULATION SCHEDULE
WAIVER TO PERMIT A USE WHICH IS NOT OTHERWISE ACCESSORY TO INDUSTRIAL–COMMERCIAL USES, I.E., A CLUBHOUSE/RENTAL OFFICE.
5.5002 DIMENSIONAL SCHEDULE
WAIVER OF REQUIREMENT FOR A MAXIMUM FLOOR AREA RATIO OF 0.10.
6.6004 SURFACE, CIRCULATION, AND LANDSCAPING REQUIREMENTS
WAIVER OF REQUIREMENT THAT AUTOMOBILE PARKING SPACES SHALL NOT BE LESS THAN 10 FEET BY 20 FEET, IN ORDER TO ALLOW PARKING SPACE OF 9 FEET BY 18 FEET.
6.6103 MULTIPLE BUILDINGS ON ONE LOT
WAIVER OF REQUIREMENT THAT WHERE MORE THAN ONE BUILDING IS PROPOSED TO BE BUILT UPON A LOT, THE PLAN SHALL BE REVIEWED BY THE PLANNING BOARD REGARDING ADEQUACY OF ACCESS TO BUILDINGS, IN ORDER TO SUBSTITUTE THE PERMISSION FROM THE ZONING BOARD OF APPEALS GRANTED UNDER THIS COMPREHENSIVE PERMIT.
6.6105 PRIVATE/COMMON DRIVEWAYS IN THE BUSINESS, BUSINESS 1, OFFICE PARK, TOWN CENTER, AND INDUSTRIAL–COMMERCIAL DISTRICTS
WAIVER OF THE REQUIREMENT THAT PRIVATE/COMMON DRIVEWAYS ARE ALLOWED IN THE I/C DISTRICT ONLY BY SPECIAL PERMIT OF THE PLANNING BOARD, IN ORDER TO SUBSTITUTE THE PERMISSION FROM THE ZONING BOARD OF APPEALS UNDER THIS COMPREHENSIVE PERMIT.
7.7004(6) SPECIAL REGULATIONS AQUIFER PROTECTION DISTRICT
WAIVER OF REQUIREMENT THAT THERE BE NO DISPOSAL OF SANITARY WASTE TO A SUBSURFACE DISPOSAL SYSTEM IN QUANTITIES EXCEEDING 440 GALLONS PER DAY PER ACRE OF AQUIFER PROTECTION DISTRICT CONTAINED WITHIN THE LOT, IN ORDER TO ALLOW QUANTITIES OF UP TO 750 GALLONS PER DAY PER ACRE OF THE SITE IN THE AQUIFER PROTECTION DISTRICT IN THE EVENT RESERVE LEACHING FIELDS ARE USED.
7.7007(1) DESIGN REQUIREMENTS
WAIVER OF REQUIREMENT THAT WHERE A PORTION OF THE SITE IS LOCATED OUTSIDE OF THE AQUIFER PROTECTION DISTRICT, POTENTIAL POLLUTION SOURCES, SUCH AS ON SITE DISPOSAL SYSTEMS, SHOULD BE LOCATED OUTSIDE THE DISTRICT BOUNDARIES, IN ORDER TO ALLOW RESERVE LEACHING FIELD TO BE LOCATED WITHIN THE AQUIFER PROTECTION DISTRICT.
7.7104(0 AND (H) W–DISTRICT USE REGULATIONS
WAIVER OF REQUIREMENTS FOR SPECIAL PERMIT FOR USE IN THE W–DISTRICT, IN ORDER TO SUBSTITUTE APPROVAL UNDER THIS COMPREHENSIVE PERMIT.
7.7106 SUBMITTALS
WAIVER OF REQUIREMENTS FOR SPECIAL PERMIT APPLICATIONS TO BE PREPARED AND SUBMITTED TO THE BOARD OF APPEALS, IN ORDER TO PERMIT ONE COMPREHENSIVE SUBMISSION TO THE BOARD TO BE ACTED ON UNDER G.L. C. 40B, §21.
7.7109 PROCEDURES
WAIVER OF REQUIREMENT FOR SPECIAL PERMIT APPLICATIONS TO BE PREPARED AND SUBMITTED TO THE BOARD OF APPEALS IN ORDER TO PERMIT A SINGLE COMPREHENSIVE PERMIT SUBMISSION TO THE BOARD TO BE ACTED UPON UNDER G.L. C.40B, §21.
7.7220 LANDS BORDERING THE W–DISTRICT
WAIVER OF REQUIREMENT FOR SPECIAL PERMIT TO PLACE STRUCTURES WITHIN ONE HUNDRED (100') FEET OF THE W–DISTRICT, IN ORDER TO PERMIT CONSTRUCTION OF WARD ROAD AND A FIRE POND WITHIN 100' OF W–DISTRICT.
8.8000 SITE PLAN APPROVAL & DESIGN REVIEW
WAIVER OF REQUIREMENT FOR SITE PLAN REVIEW BY THE PLANNING BOARD FOR THE CONSTRUCTION OF MULTI–FAMILY STRUCTURES AND PARKING AREAS ASSOCIATED WITH MULTI–FAMILY STRUCTURES.
9.9001(2) BUILDING PERMITS
WAIVER OF REQUIREMENT THAT NO BUILDING PERMIT SHALL BE ISSUED BY THE INSPECTOR OF BUILDINGS WITHOUT THE WRITTEN APPROVAL OF A SITE PLAN BY THE PLANNING BOARD.

WAIVERS FROM TOWN OF BOXBOROUGH REGULATIONS FOR THE WETLAND BYLAW:
SECTION 2.5.1 PERFORMANCE STANDARDS
WAIVER OF PROHIBITION OF PARKING LOTS, PERMANENT STRUCTURES, AND PAVING OF ANY KIND WITHIN THE ADJACENT LAND RESOURCE AREA, IN ORDER TO ALLOW THE PLACEMENT OF THE PROPOSED SANITARY WASTE DISPOSAL SYSTEM, PARKING LOT, ROAD AND OTHER PERMANENT STRUCTURES WITHIN THE ADJACENT LAND RESOURCE AREA IN ACCORDANCE WITH THE SITE PLAN APPROVED FOR THE PROJECT UNDER THIS COMPREHENSIVE PERMIT.

WAIVERS FROM BOXBOROUGH, COMPREHENSIVE PERMIT RULES OF THE ZONING BOARD OF APPEALS:
SECTION 3.02(1) LIST OF REQUESTED EXCEPTIONS
WAIVER OF REQUIREMENT THAT APPLICANT PROVIDES A COMPLETE LIST OF ALL REQUESTED EXCEPTIONS AT THE TIME OF THE INITIAL FILING OF THE APPLICATION IN ORDER TO PERMIT THIS LIST TO BE REVISED AS THE PROJECT EVOLVES THROUGH THE HEARING AND APPROVAL PROCESS.

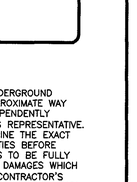

PROFESSIONAL ENGINEER FOR
ALLEN & MAJOR ASSOCIATES, INC.

REV	DATE	DESCRIPTION
9.	07/08/2015	ISSUED FOR DEFINITIVE SITE PLAN
8.	06/12/2015	REVISED PER FIRE DEPARTMENT COMMENTS
7.	05/15/2015	ISSUED FOR PERMIT
6.	05/05/2015	ISSUED FOR DEP PERMIT APPROVAL
5.	05/04/2015	REVISED FOR PRICING
4.	03/26/2015	REVISED PER TOWN COMMENTS
3.	03/02/2015	ISSUED FOR MEPA
2.	02/27/2015	REVISED PER TOWN COMMENTS
1.	02/12/2015	ISSUED FOR ZONING BOARD OF APPEALS

APPLICANT:
JPI
3 WEST MAIN STREET, SUITE 203
IRVINGTON, NY 10533

PROJECT:
DEFINITIVE SITE PLAN SET
JEFFERSON AT BEAVER BROOK
BOXBOROUGH, MA

PROJECT NO.	2075-01	DATE:	02-11-2015
SCALE:	1"=40'	DWG. NAME:	C2075-10
DESIGNED BY:	JG/SJL	CHECKED BY:	RB/CMQ

PREPARED BY:
ALLEN & MAJOR ASSOCIATES, INC.
civil & structural engineering • land surveying
environmental consulting • landscape architecture
www.allenmajor.com
100 COMMERCE WAY
P.O. BOX 2118
WOBURN MA 01888-0118
TEL: (781) 935-6889
FAX: (781) 935-2896
WOBURN, MA • LAKEVILLE, MA • MANCHESTER, NH

THIS DRAWING HAS BEEN PREPARED IN ELECTRONIC FORMAT. CLIENT/CLIENT'S REPRESENTATIVE OR CONSULTANT MAY BE PROVIDED COPIES OF DRAWINGS AND SPECIFICATIONS ON MAGNETIC MEDIA FOR HIS/HER INFORMATION AND USE FOR SPECIFIC APPLICATION TO THIS PROJECT. DUE TO THE POTENTIAL THAT THE MAGNETIC INFORMATION MAY BE MODIFIED UNINTENTIONALLY OR OTHERWISE, ALLEN & MAJOR ASSOCIATES, INC. MAY REMOVE ALL INDICATION OF THE DOCUMENTS AUTHORSHIP ON THE MAGNETIC MEDIA. PRINTED REPRESENTATIONS OF THE DRAWINGS AND SPECIFICATIONS ISSUED SHALL BE THE ONLY RECORD COPIES OF ALLEN & MAJOR ASSOCIATES, INC.'S WORK PRODUCT.

DRAWING TITLE:	SHEET No.
LANDSCAPE PLAN	C-8B

Copyright©2015 Allen & Major Associates, Inc. All Rights Reserved

WETLAND REPLICATION PLAN 1
SCALE: 1"=20'

GENERAL WETLAND REPLICATION NOTES:

1. CONTRACTOR PERFORMING WETLAND REPLICATION TO HAVE PRIOR WETLAND REPLICATION CONSTRUCTION EXPERIENCE AND QUALIFICATIONS NECESSARY TO PROVIDE A HIGH QUALITY WETLAND REPLICATION AREA.
2. GRADING, AND PLANTING OF WETLAND REPLICATION AREA SHALL BE COMPLETED IN EARLY PHASES OF PROJECT (BEGINNING OF ROUGH EARTHWORK CONSTRUCTION) PLANTS, MUST BE ESTABLISHED PRIOR TO DRAINAGE BEING CONNECTED AND DISCHARGING TO THE WETLANDS AND BITUMINOUS PAVING IS COMPLETED.
3. EXCAVATION, FILLING AND SEEDING SHALL OCCUR IN THE DRY. WATER LEVELS MUST BE LOWERED IN THE AREA BY RELYING ON DRY SEASON AND OR DRY SPELLS; OR MAY BE ACCOMPLISHED THROUGH THE USE OF DEWATERING METHODS. WATER FROM ANY DEWATERING OPERATION SHALL BE TREATED TO REDUCE TOTAL SUSPENDED SOLIDS AND BE IN COMPLIANCE WITH STATE AND FEDERAL STANDARDS.

PROPOSED CONSTRUCTION SEQUENCING

STEP 1. STAKE THE LIMITS OF WORK. THE WETLAND REPLICATION AREA SHALL BE STAKED BY A LICENSED LAND SURVEYOR.

STEP 2. INSTALL EROSION CONTROL. PLACE AND STAKE THE SILTATION FENCING & HAYBALES FOR EROSION CONTROL.

STEP 3. PREPARE THE REPLICATION AREA. NOTE WHICH EXISTING TREES TO REMAIN AND THESE ARE BE PROTECTED WITH TEMPORARY CONSTRUCTION FENCING.

STEP 4. EXCAVATION AND SOIL REPLACEMENT. THE EXISTING TRASH, BOULDERS, AND EXISTING UPLAND FILL SOILS ARE TO BE REMOVED DOWN TO A DEPTH 16 INCHES BELOW THE FINISH GRADE ELEVATIONS AND FINE GRADED. ANY BOULDERS, ROCK LEDGE, STONES, CUT MATERIAL, EXISTING OLD FILL MATERIAL, AND ANY EXISTING TRASH WITHIN THE REPLICATION AREA IS TO BE REMOVED FROM THE SITE AND PROPERLY DISPOSED OF AT NO ADDITIONAL COST TO THE OWNER. AFTER EXCAVATION IS COMPLETED, AN MINIMUM OF 12 INCHES OF TOPSOIL ARE TO BE REPLACED IN THE WETLAND REPLICATION AREA, IN 6" LIFTS. WHEN USING TOPSOILS FROM OFF-SITE SOURCES DO NOT USE PEAT OR OTHER SOILS FROM AREAS WHERE ANY PLANTS LISTED BY THE MASSACHUSETTS INVASIVE PLANTS ADVISORY GROUP AS "INVASIVE", "LIKELY INVASIVE" OR "POTENTIALLY INVASIVE" ARE GROWING SINCE THESE PLANTS ARE HIGHLY INVASIVE AND HAVE NO WILDLIFE FOOD VALUE.

STEP 5. SEEDING. SPREAD NEW ENGLAND EROSION CONTROL/RESTORATION MIX FOR DRY SITES & NEW ENGLAND WETLAND MIX ON AREAS NOTED ON THE PLAN. MIX EACH SEPARATE MIX TOGETHER AT 50/50 RATIO. (SEE SEED MIX SPECIFICATION ON THIS SHEET)

SPREAD AT A RATIO OF 1 LB PER 800 SQ. FT. SEED MIX AVAILABLE FROM NEW ENGLAND WETLAND PLANTS, 820 WEST ST., AMHERST, MA, 413-548-8000.

SEEDED AREAS TO BE TEMPORARILY IRRIGATED UNTIL ESTABLISHMENT AND ACCEPTANCE. CONTRACTOR RESPONSIBLE FOR RE-SEEDING AS NECESSARY AND MAINTENANCE UNTIL ESTABLISHMENT AND ACCEPTANCE.

STEP 6. PLACE AND STAKE ADDED HAY BALES & SILTATION FENCING ON THE UPLAND SIDE OF THE REPLICATION AREA FOR EROSION CONTROL DURING INTITIAL ESTABLISHMENT. IN UPLAND AREAS ONLY, AN UPLAND MIX SHALL BE APPLIED TO NON-WETLAND AREAS TO PROVIDE VEGETATIVE COVER AND EROSION CONTROL. SEE LANDSCAPE PLAN FOR UPLAND LAWN SEED MIX COMPONENTS. IN THIS STEP, THE EROSION CONTROLS WILL BE PLACED ABOVE THE FINISH GRADE OF THE NEWLY CREATED WETLAND REPLICATION AREA. THE GOAL OF THIS FINAL PLACEMENT OF EROSION CONTROLS IS TO PREVENT SEDIMENT FROM BEING DEPOSITED WITHIN THE NEW WETLAND AREA.

STEP 7. REMOVAL OF HAY BALES, SILT FENCE. AND TEMPORARY EARTHEN DAM ONCE VEGETATION IS ESTABLISHED, THE HAY BALES, SILT FENCE AND TEMPORARY EARTHEN DAM CAN BE REMOVED ONLY WITH THE APPROVAL OF THE WOBURN CONSERVATION COMMISSION. CONTRACTOR TO BE FAMILIAR WITH AND FOLLOW ALL WOBURN CONSERVATION COMMISSION ORDER OF CONDITIONS REQUIREMENTS AT NO ADDITIONAL COST TO THE OWNER.

GENERAL NOTES:

1. THE CONTRACTOR IS SPECIFICALLY CAUTIONED THAT THE LOCATION AND/OR ELEVATION OF EXISTING UTILITIES AND STRUCTURES AS SHOWN ON THESE PLANS IS BASED ON RECORDS OF VARIOUS UTILITY COMPANIES AND WHERE POSSIBLE, MEASUREMENTS TAKEN IN THE FIELD. THE LOCATIONS OF EXISTING UNDERGROUND UTILITIES ARE SHOWN IN AN APPROXIMATE WAY ONLY AND HAVE NOT BEEN INDEPENDENTLY VERIFIED BY THE OWNER OR IT'S REPRESENTATIVE. THE CONTRACTOR SHALL DETERMINE THE EXACT LOCATION OF ALL EXISTING UTILITIES BEFORE COMMENCING WORK, AND AGREES TO BE FULLY RESPONSIBLE FOR ANY AND ALL DAMAGES WHICH MIGHT BE OCCASIONED BY THE CONTRACTOR'S FAILURE TO EXACTLY LOCATE AND PRESERVE ANY AND ALL UNDERGROUND UTILITIES. THIS INFORMATION IS NOT TO BE RELIED ON AS BEING EXACT OR COMPLETE. THE LOCATION OF ALL UNDERGROUND UTILITIES AND STRUCTURES SHALL BE VERIFIED IN THE FIELD BY THE CONTRACTOR PRIOR TO THE START OF CONSTRUCTION. THE CONTRACTOR MUST CONTACT THE APPROPRIATE UTILITY COMPANY, ANY GOVERNING PERMITTING AUTHORITY, AND "DIGSAFE" AT LEAST 72 HOURS PRIOR TO ANY EXCAVATION WORK TO REQUEST EXACT FIELD LOCATION OF UTILITIES AND THE ENGINEER SHALL BE NOTIFIED IN WRITING OF ANY UTILITIES INTERFERING WITH THE PROPOSED CONSTRUCTION AND APPROPRIATE REMEDIAL ACTION TAKEN BEFORE PROCEEDING WITH THE WORK. IT SHALL BE THE RESPONSIBILITY OF THE CONTRACTOR TO RELOCATE ALL EXISTING UTILITIES WHICH CONFLICT WITH THE PROPOSED IMPROVEMENTS SHOWN ON THE PLANS.
2. THE INFORMATION SHOWN ON THIS PLAN IS THE SOLE PROPERTY OF ALLEN & MAJOR ASSOCIATES, INC. IT'S INTENDED USE IS TO PROVIDE INFORMATION. ANY ALTERATION, MISUSE, OR RECALCULATION OF INFORMATION OR DATA WITHOUT THE EXPRESSED, WRITTEN CONSENT OF ALLEN & MAJOR ASSOCIATES, INC. IS STRICTLY PROHIBITED.
3. SEE NOTES AND ABBREVIATIONS PLAN; SHEET ABB-1 & ABB-2 FOR ADDITIONAL NOTES
4. ALL EROSION CONTROL MEASURES AS SHOWN ON THIS PLAN AND EROSION CONTROL PLANS SHALL BE IN PLACE PRIOR TO ANY RE-GRADING, DEMOLITION, OR SEEDING ACTIVITY.
5. EXCAVATION, FILLING AND SEEDING SHALL OCCUR IN THE DRY. WATER LEVELS MAY BE LOWERED IN THE REPLICATION AREA BY RELYING ON DRY SEASON AND OR DRY SPELLS; OR MAY BE ACCOMPLISHED THROUGH THE USE OF DEWATERING METHODS.
6. WATER FROM ANY DEWATERING OPERATION SHALL BE TREATED TO REDUCE TOTAL SUSPENDED SOLIDS, SHALL NOT OUTLET TO THE WETLANDS AND SHALL BE IN COMPLIANCE WITH STATE AND FEDERAL STANDARDS.
7. CONSTRUCTION OF THE REPLICATION AREA SHALL BE OVERSEEN BY A WETLAND SPECIALIST, EXPERIENCED IN WETLAND REPLICATION AND HIRED BY OWNER.
8. THERE MAY BE ADDITIONAL WETLAND REPLICATION CRITERIA FOUND IN THE ORDER OF CONDITIONS FROM THE WOBURN CONSERVATION COMMISSION. THE CONTRACTOR SHALL HAVE A COPY OF THESE REQUIREMENTS PRIOR TO COMMENCING CONSTRUCTION, AND SHALL REVIEW, AND COMPLY WITH THE ORDER OF CONDITIONS AT NO ADDITIONAL COST TO THE OWNER.
9. AS POSSIBLE, THE CONTRACTOR SHALL SALVAGE SOIL FROM THE TEMPORARY AND PERMANENT WETLAND DISTURBANCE AREAS TO BE USED IN PLACE AND WITHIN THE WETLAND REPLICATION AREA TO THE MAXIMUM EXTENT PRACTICABLE. THE SALVAGED SOILS SHOULD BE RELOCATED TO THE WETLAND REPLICATION AREA AS SOON AS PRACTICABLE. ADDITIONAL SOIL MATERIAL BROUGHT FROM OFFSITE SOURCES SHALL MATCH THE DUG WETLAND SOILS PROPERTIES INCLUDING SOIL TEXTURE, SOIL NUTRIENT ANALYSIS, AND SOIL COLOR. ANY SOILS BROUGHT FROM OFFSITE SOURCES SHALL BE TESTED BY A SOIL LABORATORY SUCH AS UMASS AMHERST SOILS TESTING LABORATORY FOR SOIL TEXTURAL ANALYSIS, ORGANIC CONTENT & SOIL PH PRIOR TO BEING PURCHASED.
10. IN THE WETLAND REPLICATION AREA, AVOID OVER COMPACTION OF SOILS BY ALLOWING TIME FOR NATURAL COMPACTION. NO ADDITIONAL MANUAL COMPACTION OF SOIL IS NECESSARY. OVERFILL THE PROPOSED SURFACE SLIGHTLY TO ACCOMMODATE NATURAL SETTLEMENT TO PROPER GRADE.
11. DO NOT USE HEAVY EQUIPMENT WITHIN THE WETLAND REPLICATION AREA. HEAVY EQUIPMENT CAN BE USED AROUND THE PERIMETER, TO SUPPLY THE SOILS. GRADE WETLAND REPLICATION AREA WITH LIGHT EQUIPMENT SUCH AS A COMPACT LOADER OR DOZER WITH MARSH TRACK.
12. CONTRACTOR SHALL SUBMIT SEED & SOIL SHOP DRAWINGS FOR REVIEW AND APPROVAL TO THE WETLAND SPECIALIST PRIOR TO ORDERING MATERIALS AND CONSTRUCTION.

LEGEND

- PROPERTY LINE
- WETLAND DISTURBANCE AREA
- WETLAND REPLICATION AREA
- WETLAND DISTURBANCE
- WETLAND REPLICATION
- TEMPORARY WETLAND DISTURBANCE
- PROPOSED CONTOUR (80)
- EXISTING CONTOUR (82)
- HAYBALES W/ SILT FENCE
- EXIST. BVW WETLAND LIMITS (WF2-191, WF2-190)
- LIMIT OF WORK

NEW ENGLAND EROSION CONTROL / RESTORATION MIX FOR DRY SITES:

1.	CREEPING RED FESCUE	FESTUCA RUBRA
2.	CANADA WILD RYE	ELYMUS CANADENSIS
3.	ANNUAL RYEGRASS	LOLIUM MULTIFLORUM
4.	RYEGRASS	LOLIUM PERENNE PERREN
5.	BLUE GRAMA	BOUTELOUA GRACILIS
6.	LITTLE BLUESTEM	SCHIZACHYRIUM SCOPARI
7.	INDIAN GRASS	SORGHASTRUM NUTANS
8.	ROUGH BENTGRASS/TICKLEGRASS	AGROSTIS SCABRA
9.	UPLAND BENTGRASS	AGROSTIS PERENNANS

NEW ENGLAND WETLAND PLANTS INC. SEED MIXES:
(SEE A&M NOTES FOR APPLICATION RATE OF SEED MIXES)

(BY NEW ENGLAND WETLAND PLANTS INC)
EROSION CONTROL/RESTORATION MIX FOR DETENTION BASINS AND MOIST SITES (SEE A&M NOTES FOR APPLICATION RATE OF SEED MIXES)

A.	ELYMUS VIRGINICUS	VIRGINIA WILD RYE
B.	FESTUCA RUBRA CREEPING	RED FESCUE
C.	SCHIZACHYRIUM SCOPARIUM	LITTLE BLUESTEM
D.	ANDROPOGON GERARDII	BIG BLUESTEM
E.	CAREX VULPINOIDEA	FOX SEDGE
F.	PANICUM VIRGATUM	SWITCH GRASS
G.	AGROSTIS SCABRA	ROUGH BENTGRASS
H.	ASTER NOVAE-ANGLIAE	NEW ENGLAND ASTER
I.	EUPATORIUM PERFOLIATUM	BONESET
J.	EUTHAMIA GRAMINIFOLIA	GRASS LEAVED GOLDENROD
K.	SCIRPUS ATROVIRENS	GREEN BULRUSH
L.	VERBENA HASTATA	BLUE VERVAIN
M.	JUNCUS EFFUSUS	SOFT RUSH
N.	SCIRPUS CYPERINUS	WOOL GRASS

NEW ENGLAND WETMIX (WETLAND SEED MIX)

A.	CAREX VULPINOIDEA	FOX SEDGE
B.	CAREX LURIDA LURID	SEDGE
C.	CAREX SCOPARIA	BLUNT BROOM SEDGE
D.	VERBENA HASTATA	BLUE VERVAIN
E.	SCIRPUS ATROVIRENS	GREEN BULRUSH
F.	CAREX LUPULINA	HOP SEDGE
G.	BIDENS CERNUA	NODDING BUR MARIGOLD
H.	CAREX COMOSA	BRISTLY/COSMOS SEDGE
I.	CAREX CRINITA	FRINGED SEDGE
J.	JUNCUS EFFUSUS	SOFT RUSH
K.	SCIRPUS CYPERINUS	WOOL GRASS
L.	GLYCERIA GRANDIS	AMERICAN MANNA GRASS
M.	EUPATORIUM MACULATUM	SPOTTED JOE PYE WEED
N.	EUPATORIUM PERFOLIATUM	BONESET
O.	ALISMA SUBCORDATUM	MUD PLANTAIN
P.	ASTER PUNICEUS	PURPLE STEMMED ASTER
Q.	GLYCERIA CANADENSIS	RATTLESNAKE GRASS
R.	SCIRPUS VALIDUS SOFT	STEM BULRUSH
S.	ASCLEPIAS INCARNATA	SWAMP MILKWEED
T.	MIMULUS RINGENS	SQUARE STEMMED MONKEY FLOWER

SOIL COMPOSITION GOAL
CREATE A SOIL PROFILE NEAREST THE ADJACENT EXISTING UNDISTURBED WETLAND.

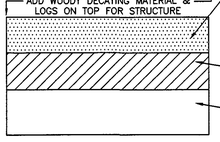

A HORIZON (TOPSOIL) 12" MIN. DEPTH (AFTER SETTLEMENT)
(MIX OF BOTH ONSITE CUT WETLAND SOILS AND OFFSITE SOURCE. OFFSITE SOILS TO BE (DARK (10YR 2/1, RICH, MUCKY HORIZON; DO NOT USE NORMAL LAWN TOPSOIL) (MANUFACTURED WETLAND TOPSOILS), DARK, ORGANIC RICH SOIL, LOOSE TO FRIABLE CONSISTENCY; NO HAZARDOUS MATERIAL, MISC. DEBRIS, OR TRASH. NO STONES GREATER THAN 1".

B HORIZON (AS APPLICABLE)
EXISTING UNDISTURBED LAYER
SUITABLE DEPTH AS A ROOTING MEDIUM

C HORIZON (AS APPLICABLE)
EXISTING UNDISTURBED LAYER
SUITABLE DEPTH AS A ROOTING MEDIUM

NOTES:
1. TOP OF LOAM (TOPSOIL) IS FINISHED GRADE.
2. TOPSOIL BROUGH FROM OFFSITE SHALL BE SUPPLIED AT NO ADDITIONAL COST TO THE OWNER. FOR ALL SOILS BROUGHT FROM OFFSITE SOURCES TO BE USED AS WETLAND REPLICATION SOILS THE FOLLOWING SHALL APPLY:

- SOILS SHALL BE CLASSIFIED AS LOAMY SAND, TO SILT LOAM TEXTURE RANGE PER USDA TEXTURAL TRIANGLE. MAXIMUM CLAY CONTENT IS LESS THAN 10%, 15-40% SAND, 50-70% SILT, AND 10-15% LEAF COMPOST (AGED LEAF MULCH AND ORGANIC MATTER AS AVAILABLE FROM NEWLAND FARMS, 145 NEWLAND STREET NORTON, MA 508-285-3169).
- SOILS SHALL BE COMPOSED OF A NATURAL, FERTILE, FRIABLE SOIL TYPICAL OF THE ADJACENT WETLAND SOILS. THE SOILS SHALL BE SUITABLE FOR THE GERMINATION OF SEEDS AND SUPPORT OF VEGETATIVE GROWTH AND MATCH THE PARTICLE DISTRIBUTION AND ORGANIC CONTENT REQUIREMENTS BELOW. TOPSOIL SHALL BE FREE OF ANY OBJECTS GREATER THAN 1 INCH IN DIAMETER INCLUDING STONES, EARTH CLODS, OR STICKS. IT SHALL CONTAIN NO STUMPS, CLAY LUMPS, ROOTS, OTHER OBJECTIONABLE, EXTRANEOUS MATTER OR DEBRIS NOR SHALL CONTAIN TOXIC SUBSTANCES.
- THE CONTRACTOR SHALL PROVIDE THE OWNER / LANDSCAPE ARCHITECT WITH SOIL TEST RESULTS (RECOMMEND UMASS AMHERST SOIL TESTING LAB) FOR APPROVAL BY THE WETLAND SCIENTIST PRIOR TO PURCHASING AND PLACING THE SOIL. THESE TEST RESULTS NEED TO BE SUBMITTED A MINIMUM OF 30 DAYS PRIOR TO INSTALLATION. IF THE PLANTING SOIL DOES NOT FALL WITHIN THE REQUIRED SIEVE ANALYSIS, TEXTURAL CLASS, ORGANIC CONTENT, OR PH RANGE, IT SHALL BE ADJUSTED TO MEET THE SPECIFICATIONS THROUGH THE ADDITION OF SAND, COMPOST, LIMESTONE, OR ALUMINUM SULFATE TO BRING IT WITHIN THE SPECIFIED LIMITS AT NO ADDITIONAL COST TO THE OWNER.
- OPSOIL SHALL HAVE A PH VALUE BETWEEN 5.5 AND 6.5. SOILS SHALL CONTAIN AT LEAST 10% ORGANIC MATTER OF TOTAL DRY WEIGHT AND SHALL CONFORM TO THE ABOVE TEXTURE CLASS

1 **WETLAND REPLICATION SOIL**
NOT TO SCALE

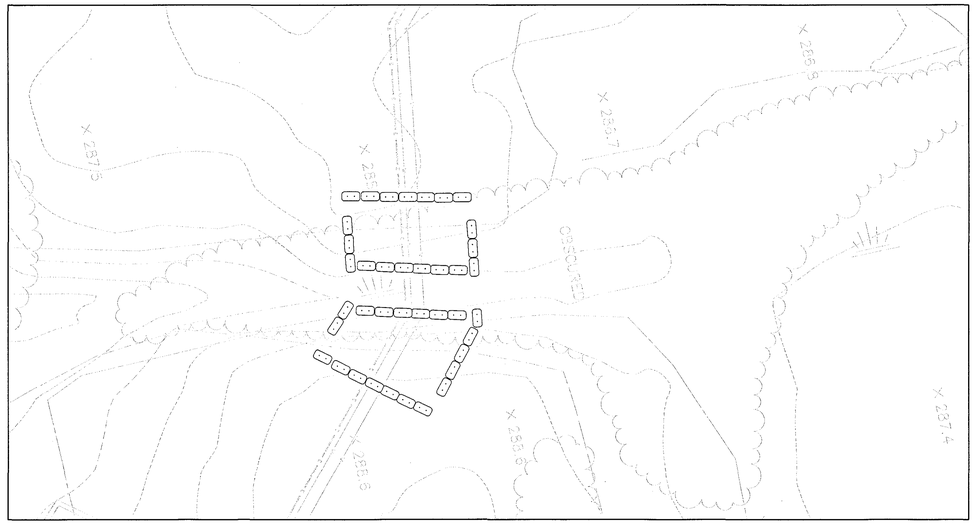

WETLAND REPLICATION PLAN 2
SCALE: 1"=20'

GRAPHIC SCALE
20 0 10 20 40 80
(IN FEET)
1 inch = 20 ft.

N:\PROJECTS\2075-01\CIVIL\DRAWINGS\CURRENT\2075-01 - LANDSCAPE.DWG

WAIVERS OF TOWN OF BOXBOROUGH ZONING BYLAWS:
4.4003(1) USE REGULATION SCHEDULE
WAIVER TO PERMIT SINGLE-FAMILY AND MULTI-FAMILY ATTACHED RESIDENTIAL USES NOT OTHERWISE PERMITTED IN THE INDUSTRIAL/COMMERCIAL DISTRICT (I.E. THE PROPOSED TWO (2) SINGLE FAMILY DWELLINGS AND THE PROPOSED 244 APARTMENT UNITS IN ELEVEN (11) MULTI-FAMILY BUILDINGS, FOR A TOTAL OF 246 UNITS)
4.4033 USE REGULATION SCHEDULE
WAIVER TO PERMIT A USE WHICH IS NOT OTHERWISE ACCESSORY TO INDUSTRIAL-COMMERCIAL USES, I.E., A CLUBHOUSE/RENTAL OFFICE.
5.5002 DIMENSIONAL SCHEDULE
WAIVER OF REQUIREMENT FOR A MAXIMUM FLOOR AREA RATIO OF 0.10.
6.8004 SURFACE, CIRCULATION, AND LANDSCAPING REQUIREMENTS
WAIVER OF REQUIREMENT THAT AUTOMOBILE PARKING SPACES SHALL NOT BE LESS THAN 10 FEET BY 20 FEET, IN ORDER TO ALLOW PARKING SPACE OF 9 FEET BY 18 FEET.
6.8103 MULTIPLE BUILDINGS ON ONE LOT
WAIVER OF REQUIREMENT THAT WHERE MORE THAN ONE BUILDING IS PROPOSED TO BE BUILT UPON A LOT, THE PLAN SHALL BE REVIEWED BY THE PLANNING BOARD REGARDING ADEQUACY OF ACCESS TO BUILDINGS, IN ORDER TO SUBSTITUTE THE PERMISSION FROM THE ZONING BOARD OF APPEALS GRANTED UNDER THIS COMPREHENSIVE PERMIT.
6.8105 PRIVATE/COMMON DRIVEWAYS IN THE BUSINESS, BUSINESS 1, OFFICE PARK, TOWN CENTER, AND INDUSTRIAL-COMMERCIAL DISTRICTS
WAIVER OF THE REQUIREMENT THAT PRIVATE/COMMON DRIVEWAYS ARE ALLOWED IN THE IC DISTRICT ONLY BY SPECIAL PERMIT OF THE PLANNING BOARD, IN ORDER TO SUBSTITUTE THE PERMISSION FROM THE ZONING BOARD OF APPEALS UNDER THIS COMPREHENSIVE PERMIT.
7.7004(G) SPECIAL REGULATIONS AQUIFER PROTECTION DISTRICT
WAIVER OF REQUIREMENT THAT THERE BE NO DISPOSAL OF SANITARY WASTE TO A SUBSURFACE DISPOSAL SYSTEM IN QUANTITIES EXCEEDING 440 GALLONS PER DAY PER ACRE OF AQUIFER PROTECTION DISTRICT CONTAINED WITHIN THE LOT, IN ORDER TO ALLOW QUANTITIES OF UP TO 750 GALLONS PER DAY PER ACRE OF THE SITE IN THE AQUIFER PROTECTION DISTRICT IN THE EVENT RESERVE LEACHING FIELDS ARE USED.
7.7007(1) DESIGN REQUIREMENTS
WAIVER OF REQUIREMENT THAT WHERE A PORTION OF THE SITE IS LOCATED OUTSIDE OF THE AQUIFER PROTECTION DISTRICT, POTENTIAL POLLUTION SOURCES, SUCH AS ON SITE DISPOSAL SYSTEMS, SHOULD BE LOCATED OUTSIDE THE DISTRICT BOUNDARIES IN ORDER TO ALLOW RESERVE LEACHING FIELD TO BE LOCATED WITHIN THE AQUIFER PROTECTION DISTRICT.
7.7104(G) AND (H) W-DISTRICT USE REGULATIONS
WAIVER OF REQUIREMENTS FOR SPECIAL PERMIT FOR USE IN THE W-DISTRICT, IN ORDER TO SUBSTITUTE APPROVAL UNDER THIS COMPREHENSIVE PERMIT.
7.7106 SUBMITTALS
WAIVER OF REQUIREMENTS FOR SPECIAL PERMIT APPLICATIONS TO BE PREPARED AND SUBMITTED TO THE BOARD OF APPEALS, IN ORDER TO PERMIT ONE COMPREHENSIVE SUBMISSION TO THE BOARD TO BE ACTED UPON UNDER G.L. C. 40B, §21.
7.7109 PROCEDURES
WAIVER OF REQUIRMENT FOR SPECIAL PERMIT APPLICATIONS TO BE PREPARED AND SUBMITTED TO THE BOARD OF APPEALS IN ORDER TO PERMIT A SINGLE COMPREHENSIVE PERMIT SUBMISSION TO THE BOARD TO BE ACTED UPON UNDER G.L. C.40B, §21.
7.7300 LANDS BORDERING THE W-DISTRICT
WAIVER OF REQUIREMENT FOR SPECIAL PERMIT TO PLACE STRUCTURES WITHIN ONE HUNDRED (100') FEET OF THE W-DISTRICT, IN ORDER TO PERMIT CONSTRUCTION OF WARD ROAD AND A FIRE POND WITHIN 100' OF W-DISTRICT.
8.8000 SITE PLAN APPROVAL & DESIGN REVIEW
WAIVER OF REQUIREMENT FOR SITE PLAN REVIEW BY THE PLANNING BOARD FOR THE CONSTRUCTION OF MULTI-FAMILY STRUCTURES AND PARKING AREAS ASSOCIATED WITH MULTI-FAMILY STRUCTURES.
9.9001(2) BUILDING PERMITS
WAIVER OF REQUIREMENT THAT NO BUILDING PERMITS SHALL BE ISSUED BY THE INSPECTOR OF BUILDINGS WITHOUT THE WRITTEN APPROVAL OF A SITE PLAN BY THE PLANNING BOARD.

WAIVERS FROM TOWN OF BOXBOROUGH REGULATIONS FOR THE WETLAND BYLAW:
SECTION 2.5.3.1 PERFORMANCE STANDARDS
WAIVER OF PROHIBITION OF PARKING LOTS, ROADS, PERMANENT STRUCTURES, AND SANITARY WASTE DISPOSAL SYSTEMS WITHIN 100 FEET OF ADJACENT LAND RESOURCE AREA, IN ORDER TO ALLOW CONSTRUCTION OF PARKING LOTS, ROADS, SANITARY WASTE DISPOSAL SYSTEM, PARKING LOTS, ROAD AND OTHER PERMANENT STRUCTURES WITHIN THE ADJACENT LAND RESOURCE AREA IN ACCORDANCE WITH THE SITE PLAN APPROVED FOR THE PROJECT UNDER THIS COMPREHENSIVE PERMIT.

WAIVERS FROM BOXBOROUGH COMPREHENSIVE PERMIT RULES OF THE ZONING BOARD OF APPEALS:
SECTION 3.02(1) LIST OF REQUESTED EXCEPTIONS
WAIVER OF REQUIREMENT THAT APPLICANT PROVIDES A COMPLETE LIST OF ALL REQUESTED EXCEPTIONS AT THE TIME OF THE INITIAL FILING OF THE APPLICATION IN ORDER TO PERMIT THE LIST TO BE REVISED AS THE PROJECT EVOLVES THROUGH THE HEARING AND APPROVAL PROCESS.

COMMONWEALTH OF MASSACHUSETTS TIMOTHY J. WILLIAMS CIVIL No. 43119 REGISTERED PROFESSIONAL ENGINEER 5/15/15

PROFESSIONAL ENGINEER FOR
ALLEN & MAJOR ASSOCIATES, INC.

REV	DATE	DESCRIPTION
9.	07/08/2015	ISSUED FOR DEFINITIVE SITE PLAN
8.	06/12/2015	REVISED PER FIRE DEPARTMENT COMMENTS
7.	05/15/2015	ISSUED FOR PERMIT
6.	05/05/2015	ISSUED FOR DEP PERMIT APPROVAL
5.	05/04/2015	REVISED FOR PRICING
4.	03/26/2015	REVISED PER TOWN COMMENTS
3.	03/02/2015	ISSUED FOR MEPA
2.	02/27/2015	REVISED PER TOWN COMMENTS
1.	02/12/2015	ISSUED FOR ZONING BOARD OF APPEALS

APPLICANT:
JPI
3 WEST MAIN STREET, SUITE 203
IRVINGTON, NY 10533

PROJECT:
DEFINITIVE SITE PLAN SET
JEFFERSON AT BEAVER BROOK
BOXBOROUGH, MA

PROJECT NO.	2075-01	DATE:	02-11-2015
SCALE:	1"=20'	DWG. NAME:	C2075-10
DESIGNED BY:	JG/SJL	CHECKED BY:	RB/CMQ

PREPARED BY:

ALLEN & MAJOR ASSOCIATES, INC.
civil & structural engineering • land surveying
environmental consulting • landscape architecture
www.allenmajor.com
100 COMMERCE WAY
P.O. BOX 2118
WOBURN MA 01888-0118
TEL: (781) 933-6889
FAX: (781) 933-2896
WOBURN, MA • LAKEVILLE, MA • MANCHESTER, NH

THIS DRAWING HAS BEEN PREPARED IN ELECTRONIC FORMAT. CLIENT/CLIENT'S REPRESENTATIVE OR CONSULTANT MAY BE PROVIDED COPIES OF DRAWINGS AND SPECIFICATIONS ON MAGNETIC MEDIA FOR HIS/HER INFORMATION AND USE FOR SPECIFIC APPLICATION TO THIS PROJECT. DUE TO THE POTENTIAL THAT THE MAGNETIC INFORMATION MAY BE MODIFIED UNINTENTIONALLY OR OTHERWISE, ALLEN & MAJOR ASSOCIATES, INC. MAY REMOVE ALL INDICATION OF THE DOCUMENT'S AUTHORSHIP ON THE MAGNETIC MEDIA. PRINTED REPRESENTATIONS OF THE DRAWINGS AND SPECIFICATIONS ISSUED SHALL BE THE ONLY RECORD COPIES OF ALLEN & MAJOR ASSOCIATES, INC'S WORK PRODUCT.

DRAWING TITLE:	SHEET No.
LANDSCAPE PLAN	C-8D

Copyright©2015 Allen & Major Associates, Inc.
All Rights Reserved

GENERAL WETLAND REPLICATION NOTES:

1. CONTRACTOR PERFORMING WETLAND REPLICATION TO HAVE PRIOR WETLAND REPLICATION CONSTRUCTION EXPERIENCE AND QUALIFICATIONS NECESSARY TO PROVIDE A HIGH QUALITY WETLAND REPLICATION AREA.
2. GRADING, AND PLANTING OF WETLAND REPLICATION AREA SHALL BE COMPLETED IN EARLY PHASES OF PROJECT (BEGINNING OF ROUGH EARTHWORK CONSTRUCTION) PLANTS, MUST BE ESTABLISHED PRIOR TO DRAINAGE BEING CONNECTED AND DISCHARGING TO THE WETLANDS AND BITUMINOUS PAVING IS COMPLETED.
3. EXCAVATION, FILLING AND SEEDING SHALL OCCUR IN THE DRY. WATER LEVELS MUST BE LOWERED IN THE AREA BY RELYING ON DRY SEASON AND OR DRY SPELLS; OR MAY BE ACCOMPLISHED THROUGH THE USE OF DEWATERING METHODS. WATER FROM ANY DEWATERING OPERATION SHALL BE TREATED TO REDUCE TOTAL SUSPENDED SOLIDS AND BE IN COMPLIANCE WITH STATE AND FEDERAL STANDARDS.

PROPOSED CONSTRUCTION SEQUENCING

STEP 1. STAKE THE LIMITS OF WORK. THE WETLAND REPLICATION AREA SHALL BE STAKED BY A LICENSED LAND SURVEYOR.

STEP 2. INSTALL EROSION CONTROL. PLACE AND STAKE THE SILTATION FENCING & HAYBALES FOR EROSION CONTROL.

STEP 3. PREPARE THE REPLICATION AREA. NOTE WHICH EXISTING TREES TO REMAIN AND THESE ARE BE PROTECTED WITH TEMPORARY CONSTRUCTION FENCING.

STEP 4. EXCAVATION AND SOIL REPLACEMENT. THE EXISTING TRASH, BOULDERS, AND EXISTING UPLAND FILL SOILS ARE TO BE REMOVED DOWN TO A DEPTH 16 INCHES BELOW THE FINISH GRADE ELEVATIONS AND FINE GRADED. ANY BOULDERS, ROCK LEDGE, STONES, CUT MATERIAL, EXISTING OLD FILL MATERIAL, AND ANY EXISTING TRASH WITHIN THE REPLICATION AREA IS TO BE REMOVED FROM THE SITE AND PROPERLY DISPOSED OF AT NO ADDITIONAL COST TO THE OWNER. AFTER EXCAVATION IS COMPLETED, AN MINIMUM OF 12 INCHES OF TOPSOIL ARE TO BE REPLACED IN THE WETLAND REPLICATION AREA, IN 6" LIFTS. WHEN USING TOPSOILS FROM OFF-SITE SOURCES DO NOT USE PEAT OR OTHER SOILS FROM AREAS WHERE ANY PLANTS LISTED BY THE MASSACHUSETTS INVASIVE PLANTS ADVISORY GROUP AS "INVASIVE", "LIKELY INVASIVE" OR "POTENTIALLY INVASIVE" ARE GROWING SINCE THESE PLANTS ARE HIGHLY INVASIVE AND HAVE NO WILDLIFE FOOD VALUE.

STEP 5. SEEDING. SPREAD NEW ENGLAND EROSION CONTROL/RESTORATION MIX FOR DRY SITES & NEW ENGLAND WETLAND MIX ON AREAS NOTED ON THE PLAN. MIX EACH SEPARATE MIX TOGETHER AT 50/50 RATIO. (SEE SEED MIX SPECIFICATION ON THIS SHEET)

SPREAD AT A RATIO OF 1 LB PER 800 SQ. FT. SEED MIX AVAILABLE FROM NEW ENGLAND WETLAND PLANTS, 820 WEST ST., AMHERST, MA, 413-548-8000.

SEEDED AREAS TO BE TEMPORARILY IRRIGATED UNTIL ESTABLISHMENT AND ACCEPTANCE. CONTRACTOR RESPONSIBLE FOR RE-SEEDING AS NECESSARY AND MAINTENANCE UNTIL ESTABLISHMENT AND ACCEPTANCE.

STEP 6. PLACE AND STAKE ADDED HAY BALES & SILTATION FENCING ON THE UPLAND SIDE OF THE REPLICATION AREA FOR EROSION CONTROL DURING INTITIAL ESTABLISHMENT. IN UPLAND AREAS ONLY, AN UPLAND MIX SHALL BE APPLIED TO NON-WETLAND AREAS TO PROVIDE VEGETATIVE COVER AND EROSION CONTROL. SEE LANDSCAPE PLAN FOR UPLAND LAWN SEED MIX COMPONENTS. IN THIS STEP, THE EROSION CONTROLS WILL BE PLACED ABOVE THE FINISH GRADE OF THE NEWLY CREATED WETLAND REPLICATION AREA. THE GOAL OF THIS FINAL PLACEMENT OF EROSION CONTROLS IS TO PREVENT SEDIMENT FROM BEING DEPOSITED WITHIN THE NEW WETLAND AREA.

STEP 7. REMOVAL OF HAY BALES, SILT FENCE. AND TEMPORARY EARTHEN DAM ONCE VEGETATION IS ESTABLISHED, THE HAY BALES, SILT FENCE AND TEMPORARY EARTHEN DAM CAN BE REMOVED ONLY WITH THE APPROVAL OF THE WOBURN CONSERVATION COMMISSION. CONTRACTOR TO BE FAMILIAR WITH AND FOLLOW ALL WOBURN CONSERVATION COMMISSION ORDER OF CONDITIONS REQUIREMENTS AT NO ADDITIONAL COST TO THE OWNER.

GENERAL NOTES:

1. THE CONTRACTOR IS SPECIFICALLY CAUTIONED THAT THE LOCATION AND/OR ELEVATION OF EXISTING UTILITIES AND STRUCTURES AS SHOWN ON THESE PLANS IS BASED ON RECORDS OF VARIOUS UTILITY COMPANIES AND WHERE POSSIBLE, MEASUREMENTS TAKEN IN THE FIELD. THE LOCATIONS OF EXISTING UNDERGROUND UTILITIES ARE SHOWN IN AN APPROXIMATE WAY ONLY AND HAVE NOT BEEN INDEPENDENTLY VERIFIED BY THE OWNER OR IT'S REPRESENTATIVE. THE CONTRACTOR SHALL DETERMINE THE EXACT LOCATION OF ALL EXISTING UTILITIES BEFORE COMMENCING WORK, AND AGREES TO BE FULLY RESPONSIBLE FOR ANY AND ALL DAMAGES WHICH MIGHT BE OCCASIONED BY THE CONTRACTOR'S FAILURE TO EXACTLY LOCATE AND PRESERVE ANY AND ALL UNDERGROUND UTILITIES. THIS INFORMATION IS NOT TO BE RELIED ON AS BEING EXACT OR COMPLETE. THE LOCATION OF ALL UNDERGROUND UTILITIES AND STRUCTURES SHALL BE VERIFIED IN THE FIELD BY THE CONTRACTOR PRIOR TO THE START OF CONSTRUCTION. THE CONTRACTOR MUST CONTACT THE APPROPRIATE UTILITY COMPANY, ANY GOVERNING PERMITTING AUTHORITY, AND "DIGSAFE" AT LEAST 72 HOURS PRIOR TO ANY EXCAVATION WORK TO REQUEST EXACT FIELD LOCATION OF UTILITIES AND THE ENGINEER SHALL BE NOTIFIED IN WRITING OF ANY UTILITIES INTERFERING WITH THE PROPOSED CONSTRUCTION AND APPROPRIATE REMEDIAL ACTION TAKEN BEFORE PROCEEDING WITH THE WORK. IT SHALL BE THE RESPONSIBILITY OF THE CONTRACTOR TO RELOCATE ALL EXISTING UTILITIES WHICH CONFLICT WITH THE PROPOSED IMPROVEMENTS SHOWN ON THE PLANS.
2. THE INFORMATION SHOWN ON THIS PLAN IS THE SOLE PROPERTY OF ALLEN & MAJOR ASSOCIATES, INC. IT'S INTENDED USE IS TO PROVIDE INFORMATION. ANY ALTERATION, MISUSE, OR RECALCULATION OF INFORMATION OR DATA WITHOUT THE EXPRESSED, WRITTEN CONSENT OF ALLEN & MAJOR ASSOCIATES, INC. IS STRICTLY PROHIBITED.
3. SEE NOTES AND ABBREVIATIONS PLAN; SHEET ABB-1 & ABB-2 FOR ADDITIONAL NOTES
4. ALL EROSION CONTROL MEASURES AS SHOWN ON THIS PLAN AND EROSION CONTROL PLANS SHALL BE IN PLACE PRIOR TO ANY RE-GRADING, DEMOLITION, OR SEEDING ACTIVITY.
5. EXCAVATION, FILLING AND SEEDING SHALL OCCUR IN THE DRY. WATER LEVELS MAY BE LOWERED IN THE REPLICATION AREA BY RELYING ON DRY SEASON AND OR DRY SPELLS; OR MAY BE ACCOMPLISHED THROUGH THE USE OF DEWATERING METHODS.
6. WATER FROM ANY DEWATERING OPERATION SHALL BE TREATED TO REDUCE TOTAL SUSPENDED SOLIDS, SHALL NOT OUTLET TO THE WETLANDS AND SHALL BE IN COMPLIANCE WITH STATE AND FEDERAL STANDARDS.
7. CONSTRUCTION OF THE REPLICATION AREA SHALL BE OVERSEEN BY A WETLAND SPECIALIST, EXPERIENCED IN WETLAND REPLICATION AND HIRED BY OWNER.
8. THERE MAY BE ADDITIONAL WETLAND REPLICATION CRITERIA FOUND IN THE ORDER OF CONDITIONS FROM THE WOBURN CONSERVATION COMMISSION. THE CONTRACTOR SHALL HAVE A COPY OF THESE REQUIREMENTS PRIOR TO COMMENCING CONSTRUCTION, AND SHALL REVIEW, AND COMPLY WITH THE ORDER OF CONDITIONS AT NO ADDITIONAL COST TO THE OWNER.
9. AS POSSIBLE, THE CONTRACTOR SHALL SALVAGE SOIL FROM THE TEMPORARY AND PERMANENT WETLAND DISTURBANCE AREAS TO BE USED IN PLACE AND WITHIN THE WETLAND REPLICATION AREA TO THE MAXIMUM EXTENT PRACTICABLE. THE SALVAGED SOILS SHOULD BE RELOCATED TO THE WETLAND REPLICATION AREA AS SOON AS PRACTICABLE. ADDITIONAL SOIL MATERIAL BROUGHT FROM OFFSITE SOURCES SHALL MATCH THE DUG WETLAND SOILS PROPERTIES INCLUDING SOIL TEXTURE, SOIL NUTRIENT ANALYSIS, AND SOIL COLOR. ANY SOILS BROUGHT FROM OFFSITE SOURCES SHALL BE TESTED BY A SOIL LABORATORY SUCH AS UMASS AMHERST SOILS TESTING LABORATORY FOR SOIL TEXTURAL ANALYSIS, ORGANIC CONTENT & SOIL PH PRIOR TO BEING PURCHASED.
10. IN THE WETLAND REPLICATION AREA, AVOID OVER COMPACTION OF SOILS BY ALLOWING TIME FOR NATURAL COMPACTION. NO ADDITIONAL MANUAL COMPACTION OF SOIL IS NECESSARY. OVERFILL THE PROPOSED SURFACE SLIGHTLY TO ACCOMMODATE NATURAL SETTLEMENT TO PROPER GRADE.
11. DO NOT USE HEAVY EQUIPMENT WITHIN THE WETLAND REPLICATION AREA. HEAVY EQUIPMENT CAN BE USED AROUND THE PERIMETER, TO SUPPLY THE SOILS. GRADE WETLAND REPLICATION AREA WITH LIGHT EQUIPMENT SUCH AS A COMPACT LOADER OR DOZER WITH MARSH TRACK.
12. CONTRACTOR SHALL SUBMIT SEED & SOIL SHOP DRAWINGS FOR REVIEW AND APPROVAL TO THE WETLAND SPECIALIST PRIOR TO ORDERING MATERIALS AND CONSTRUCTION.

LEGEND

- PROPERTY LINE
- WETLAND DISTURBANCE AREA
- WETLAND REPLICATION AREA
- WETLAND DISTURBANCE
- WETLAND REPLICATION
- TEMPORARY WETLAND DISTURBANCE
- PROPOSED CONTOUR (80)
- EXISTING CONTOUR (80)
- HAYBALES W/ SILT FENCE
- EXIST. BVW WETLAND LIMITS (WF2-191, WF2-190)
- LIMIT OF WORK

WETLAND REPLICATION PLAN 1
SCALE: 1"=20'

NEW ENGLAND WETLAND PLANTS INC. SEED MIXES:
(SEE A&M NOTES FOR APPLICATION RATE OF SEED MIXES)

NEW ENGLAND EROSION CONTROL / RESTORATION MIX FOR DRY SITES:

1.	CREEPING RED FESCUE	FESTUCA RUBRA
2.	CANADA WILD RYE	ELYMUS CANADENSIS
3.	ANNUAL RYEGRASS	LOLIUM MULTIFLORUM
4.	RYEGRASS	LOLIUM PERENNE PERREN
5.	BLUE GRAMA	BOUTELOUA GRACILIS
6.	LITTLE BLUESTEM	SCHIZACHYRIUM SCOPARI
7.	INDIAN GRASS	SORGHASTRUM NUTANS
8.	ROUGH BENTGRASS/TICKLEGRASS	AGROSTIS SCABRA
9.	UPLAND BENTGRASS	AGROSTIS PERENNANS

(BY NEW ENGLAND WETLAND PLANTS INC)
EROSION CONTROL/RESTORATION MIX FOR DETENTION BASINS AND MOIST SITES (SEE A&M NOTES FOR APPLICATION RATE OF SEED MIXES)

A.	ELYMUS VIRGINICUS	VIRGINIA WILD RYE
B.	FESTUCA RUBRA CREEPING	RED FESCUE
C.	SCHIZACHYRIUM SCOPARIUM	LITTLE BLUESTEM
D.	ANDROPOGON GERARDII	BIG BLUESTEM
E.	CAREX VULPINOIDEA	FOX SEDGE
F.	PANICUM VIRGATUM	SWITCH GRASS
G.	AGROSTIS SCABRA	ROUGH BENTGRASS
H.	ASTER NOVAE-ANGLIAE	NEW ENGLAND ASTER
I.	EUPATORIUM PERFOLIATUM	BONESET
J.	EUTHAMIA GRAMINIFOLIA	GRASS LEAVED GOLDENROD
K.	SCIRPUS ATROVIRENS	GREEN BULRUSH
L.	VERBENA HASTATA	BLUE VERVAIN
M.	JUNCUS EFFUSUS	SOFT RUSH
N.	SCIRPUS CYPERINUS	WOOL GRASS

NEW ENGLAND WETMIX (WETLAND SEED MIX)

A.	CAREX VULPINOIDEA	FOX SEDGE
B.	CAREX LURIDA LURID	SEDGE
C.	CAREX SCOPARIA	BLUNT BROOM SEDGE
D.	VERBENA HASTATA	BLUE VERVAIN
E.	SCIRPUS ATROVIRENS	GREEN BULRUSH
F.	CAREX LUPULINA	HOP SEDGE
G.	BIDENS CERNUA	NODDING BUR MARIGOLD
H.	CAREX COMOSA	BRISTLY/COSMOS SEDGE
I.	CAREX CRINITA	FRINGED SEDGE
J.	JUNCUS EFFUSUS	SOFT RUSH
K.	SCIRPUS CYPERINUS	WOOL GRASS
L.	GLYCERIA GRANDIS	AMERICAN MANNA GRASS
M.	EUPATORIUM MACULATUM	SPOTTED JOE PYE WEED
N.	EUPATORIUM PERFOLIATUM	BONESET
O.	ALISMA SUBCORDATUM	MUD PLANTAIN
P.	ASTER PUNICEUS	PURPLE STEMMED ASTER
Q.	GLYCERIA CANADENSIS	RATTLESNAKE GRASS
R.	SCIRPUS VALIDUS SOFT	STEM BULRUSH
S.	ASCLEPIAS INCARNATA	SWAMP MILKWEED
T.	MIMULUS RINGENS	SQUARE STEMMED MONKEY FLOWER

SOIL COMPOSITION GOAL
CREATE A SOIL PROFILE NEAREST THE ADJACENT EXISTING UNDISTURBED WETLAND.

ADD WOODY DECAYING MATERIAL & LOGS ON TOP FOR STRUCTURE

A HORIZON (TOPSOIL) 12" MIN. DEPTH (AFTER SETTLEMENT)
(MIX OF BOTH ONSITE CUT WETLAND SOILS AND OFFSITE SOURCE. OFFSITE SOILS TO BE (DARK (10YR 2/1, RICH, MUCKY HORIZON; DO NOT USE NORMAL LAWN TOPSOIL) (MANUFACTURED WETLAND TOPSOILS), DARK, ORGANIC RICH SOIL, LOOSE TO FRIABLE CONSISTENCY; NO HAZARDOUS MATERIAL, MISC. DEBRIS, OR TRASH. NO STONES GREATER THAN 1".

B HORIZON (AS APPLICABLE)
EXISTING UNDISTURBED LAYER
SUITABLE DEPTH AS A ROOTING MEDIUM

C HORIZON (AS APPLICABLE)
EXISTING UNDISTURBED LAYER
SUITABLE DEPTH AS A ROOTING MEDIUM

NOTES:
1. TOP OF LOAM (TOPSOIL) IS FINISHED GRADE.
2. TOPSOIL BROUGH FROM OFFSITE SHALL BE SUPPLIED AT NO ADDITIONAL COST TO THE OWNER. FOR ALL SOILS BROUGHT FROM OFFSITE SOURCES TO BE USED AS WETLAND REPLICATION SOILS THE FOLLOWING SHALL APPLY:

- SOILS SHALL BE CLASSIFIED AS LOAMY SAND, TO SILT LOAM TEXTURE RANGE PER USDA TEXTURAL TRIANGLE. MAXIMUM CLAY CONTENT IS LESS THAN 10%, 15-40% SAND, 50-70% SILT, AND 10-15% LEAF COMPOST (AGED LEAF MULCH AND ORGANIC MATTER AS AVAILABLE FROM NEWLAND FARMS, 145 NEWLAND STREET NORTON, MA 508-285-3169).
- SOILS SHALL BE COMPOSED OF A NATURAL, FERTILE, FRIABLE SOIL TYPICAL OF THE ADJACENT WETLAND SOILS. THE SOILS SHALL BE SUITABLE FOR THE GERMINATION OF SEEDS AND SUPPORT OF VEGETATIVE GROWTH AND MATCH THE PARTICLE DISTRIBUTION AND ORGANIC CONTENT REQUIREMENTS BELOW. TOPSOIL SHALL BE FREE OF ANY OBJECTS GREATER THAN 1 INCH IN DIAMETER INCLUDING STONES, EARTH CLODS, OR STICKS. IT SHALL CONTAIN NO STUMPS, CLAY LUMPS, ROOTS, OTHER OBJECTIONABLE, EXTRANEOUS MATTER OR DEBRIS NOR SHALL CONTAIN TOXIC SUBSTANCES.
- THE CONTRACTOR SHALL PROVIDE THE OWNER / LANDSCAPE ARCHITECT WITH SOIL TEST RESULTS (RECOMMEND UMASS AMHERST SOIL TESTING LAB) FOR APPROVAL BY THE WETLAND SCIENTIST PRIOR TO PURCHASING AND PLACING THE SOIL. THESE TEST RESULTS NEED TO BE SUBMITTED A MINIMUM OF 30 DAYS PRIOR TO INSTALLATION. IF THE PLANTING SOIL DOES NOT FALL WITHIN THE REQUIRED SIEVE ANALYSIS, TEXTURAL CLASS, ORGANIC CONTENT, OR PH RANGE, IT SHALL BE ADJUSTED TO MEET THE SPECIFICATIONS THROUGH THE ADDITION OF SAND, COMPOST, LIMESTONE, OR ALUMINUM SULFATE TO BRING IT WITHIN THE SPECIFIED LIMITS AT NO ADDITIONAL COST TO THE OWNER.
- OPSOIL SHALL HAVE A PH VALUE BETWEEN 5.5 AND 6.5. SOILS SHALL CONTAIN AT LEAST 10% ORGANIC MATTER OF TOTAL DRY WEIGHT AND SHALL CONFORM TO THE ABOVE TEXTURE CLASS

(1) **WETLAND REPLICATION SOIL**
NOT TO SCALE

WETLAND REPLICATION PLAN 2
SCALE: 1"=20'

GRAPHIC SCALE
20 0 10 20 40 80
(IN FEET)
1 inch = 20 ft.

N:\PROJECTS\2075-01\CIVIL\DRAWINGS\CURRENT\2075-01 - LANDSCAPE.DWG

JPI

WAIVERS OF TOWN OF BOXBOROUGH ZONING BYLAWS:
4.4003(1) USE REGULATION SCHEDULE
WAIVER TO PERMIT SINGLE-FAMILY AND MULTI-FAMILY ATTACHED RESIDENTIAL USES NOT OTHERWISE PERMITTED IN THE INDUSTRIAL COMMERCIAL DISTRICT (I.E., THE PROPOSED TWO (2) SINGLE FAMILY DWELLINGS AND THE PROPOSED 244 APARTMENT UNITS IN ELEVEN (11) MULTI-FAMILY BUILDINGS, FOR A TOTAL OF 246 UNITS)
4.4033 USE REGULATION SCHEDULE
WAIVER TO PERMIT A USE WHICH IS NOT OTHERWISE ACCESSORY TO INDUSTRIAL-COMMERCIAL USES, I.E., A CLUBHOUSE/RENTAL OFFICE.
5.5002 DIMENSIONAL SCHEDULE
WAIVER OF REQUIREMENT FOR A MAXIMUM FLOOR AREA RATIO OF 0.10.
6.6004 SURFACE, CIRCULATION, AND LANDSCAPING REQUIREMENTS
WAIVER OF REQUIREMENT THAT AUTOMOBILE PARKING SPACES SHALL NOT BE LESS THAN 10 FEET BY 20 FEET, IN ORDER TO ALLOW PARKING SPACE OF 9 FEET BY 18 FEET.
6.6103 MULTIPLE BUILDINGS ON ONE LOT
WAIVER OF REQUIREMENT THAT WHERE MORE THAN ONE BUILDING IS PROPOSED TO BE BUILT UPON A LOT, THE PLAN SHALL BE REVIEWED BY THE PLANNING BOARD REGARDING ADEQUACY OF ACCESS TO BUILDINGS, IN ORDER TO SUBSTITUTE THE PERMISSION FROM THE ZONING BOARD OF APPEALS GRANTED UNDER THIS COMPREHENSIVE PERMIT.
6.6105 PRIVATE/COMMON DRIVEWAYS IN THE BUSINESS, BUSINESS 1, OFFICE PARK, TOWN CENTER, AND INDUSTRIAL-COMMERCIAL DISTRICTS
WAIVER OF THE REQUIREMENT THAT PRIVATE/COMMON DRIVEWAYS ARE ALLOWED IN THE IC DISTRICT ONLY BY SPECIAL PERMIT OF THE PLANNING BOARD, IN ORDER TO SUBSTITUTE THE PERMISSION FROM THE ZONING BOARD OF APPEALS UNDER THIS COMPREHENSIVE PERMIT.
7.7004(G) SPECIAL REGULATIONS AQUIFER PROTECTION DISTRICT
WAIVER OF REQUIREMENT THAT THERE BE NO DISPOSAL OF SANITARY WASTE TO A SUBSURFACE DISPOSAL SYSTEM IN QUANTITIES EXCEEDING 440 GALLONS PER DAY PER ACRE OF AQUIFER PROTECTION DISTRICT CONTAINED WITHIN THE LOT, IN ORDER TO ALLOW QUANTITIES OF UP TO 750 GALLONS PER DAY PER ACRE OF THE SITE IN THE AQUIFER PROTECTION DISTRICT IN THE EVENT RESERVE LEACHING FIELDS ARE USED.
7.7007(1) DESIGN REQUIREMENTS
WAIVER OF REQUIREMENT THAT WHERE A PORTION OF THE SITE IS LOCATED OUTSIDE OF THE AQUIFER PROTECTION DISTRICT, POTENTIAL POLLUTION SOURCES, SUCH AS ON SITE DISPOSAL SYSTEMS, SHOULD BE LOCATED OUTSIDE THE DISTRICT BOUNDARIES, IN ORDER TO ALLOW RESERVE LEACHING FIELD TO BE LOCATED WITHIN THE AQUIFER PROTECTION DISTRICT.
7.7104(G) AND (H) W-DISTRICT USE REGULATIONS
WAIVER OF REQUIREMENTS FOR SPECIAL PERMIT FOR USE IN THE W-DISTRICT, IN ORDER TO SUBSTITUTE APPROVAL UNDER THIS COMPREHENSIVE PERMIT.
7.7106 SUBMITTALS
WAIVER OF REQUIREMENTS FOR SPECIAL PERMIT APPLICATIONS TO BE PREPARED AND SUBMITTED TO THE BOARD OF APPEALS, IN ORDER TO PERMIT ONE COMPREHENSIVE SUBMISSION TO THE BOARD TO BE ACTED ON UNDER G.L. C. 40B, §21.
7.7109 PROCEDURES
WAIVER OF REQUIREMENT FOR SPECIAL PERMIT APPLICATIONS TO BE PREPARED AND SUBMITTED TO THE BOARD OF APPEALS IN ORDER TO PERMIT A SINGLE COMPREHENSIVE PERMIT SUBMISSION TO THE BOARD TO BE ACTED UPON UNDER G.L. C.40B, §21.
7.7200 LANDS BORDERING THE W-DISTRICT
WAIVER OF REQUIREMENT FOR SPECIAL PERMIT TO PLACE STRUCTURES WITHIN ONE HUNDRED (100') FEET OF THE W-DISTRICT, IN ORDER TO PERMIT CONSTRUCTION OF WARD ROAD AND A FIRE POND WITHIN 100' OF W-DISTRICT.
8.8000 SITE PLAN APPROVAL & DESIGN REVIEW
WAIVER OF REQUIREMENT FOR SITE PLAN REVIEW BY THE PLANNING BOARD FOR THE CONSTRUCTION OF MULTI-FAMILY STRUCTURES AND PARKING AREAS ASSOCIATED WITH MULTI-FAMILY STRUCTURES.
9.9001(2) BUILDING PERMITS
WAIVER OF REQUIREMENT THAT NO BUILDING PERMIT SHALL BE ISSUED BY THE INSPECTOR OF BUILDINGS WITHOUT THE WRITTEN APPROVAL OF A SITE PLAN BY THE PLANNING BOARD.

WAIVERS FROM TOWN OF BOXBOROUGH REGULATIONS FOR THE WETLAND BYLAW:
SECTION 2.5.3.1 PERFORMANCE STANDARDS
WAIVER OF PROHIBITION OF PARKING LOTS, PERMANENT STRUCTURES, AND SANITARY WASTE DISPOSAL SYSTEMS WITHIN ADJACENT LAND RESOURCE AREA, IN ORDER TO ALLOW THE PLACEMENT OF THE PROPOSED SANITARY WASTE DISPOSAL SYSTEM, PARKING LOT, ROAD AND OTHER PERMANENT STRUCTURES WITHIN THE ADJACENT LAND RESOURCE AREA IN ACCORDANCE WITH THE SITE PLAN APPROVED FOR THE PROJECT UNDER THIS COMPREHENSIVE PERMIT.

WAIVERS FROM BOXBOROUGH COMPREHENSIVE PERMIT RULES OF THE ZONING BOARD OF APPEALS:
SECTION 3.02(I) LIST OF REQUESTED EXCEPTIONS
WAIVER OF REQUIREMENT THAT APPLICANT PROVIDES A COMPLETE LIST OF ALL REQUESTED EXCEPTIONS AT THE TIME OF THE INITIAL FILING OF THE APPLICATION IN ORDER TO PERMIT THE LIST TO BE REVISED AS THE PROJECT EVOLVES THROUGH THE HEARING AND APPROVAL PROCESS.

COMMONWEALTH OF MASSACHUSETTS
TIMOTHY WILLIAMS
CIVIL
No.43119
REGISTERED PROFESSIONAL ENGINEER
7/8/15

PROFESSIONAL ENGINEER FOR
ALLEN & MAJOR ASSOCIATES, INC.

REV	DATE	DESCRIPTION
9.	07/08/2015	ISSUED FOR DEFINITIVE SITE PLAN
8.	06/12/2015	REVISED PER FIRE DEPARTMENT COMMENTS
7.	05/15/2015	ISSUED FOR PERMIT
6.	05/05/2015	ISSUED FOR DEP PERMIT APPROVAL
5.	05/04/2015	REVISED FOR PRICING
4.	03/26/2015	REVISED PER TOWN COMMENTS
3.	03/02/2015	ISSUED FOR MEPA
2.	02/27/2015	REVISED PER TOWN COMMENTS
1.	02/12/2015	ISSUED FOR ZONING BOARD OF APPEALS

APPLICANT:
JPI
3 WEST MAIN STREET, SUITE 203
IRVINGTON, NY 10533

PROJECT:
DEFINITIVE SITE PLAN SET
JEFFERSON AT BEAVER BROOK
BOXBOROUGH, MA

PROJECT NO.	2075-01	DATE:	02-11-2015
SCALE:	1"=20'	DWG. NAME:	C2075-10
DESIGNED BY:	JG/SJL	CHECKED BY:	RB/CMQ

PREPARED BY:

ALLEN & MAJOR ASSOCIATES, INC.
civil & structural engineering ♦ land surveying
environmental consulting ♦ landscape architecture
www.allenmajor.com
100 COMMERCE WAY
P.O. BOX 2118
WOBURN MA 01888-0118
TEL: (781) 935-6889
FAX: (781) 935-2896
WOBURN, MA ♦ LAKEVILLE, MA ♦ MANCHESTER, NH

THIS DRAWING HAS BEEN PREPARED IN ELECTRONIC FORMAT. CLIENT/CLIENT'S REPRESENTATIVE OR CONSULTANT MAY BE PROVIDED COPIES OF DRAWINGS AND SPECIFICATIONS ON MAGNETIC MEDIA FOR HIS/HER INFORMATION AND USE FOR SPECIFIC APPLICATION TO THIS PROJECT. DUE TO THE POTENTIAL THAT THE MAGNETIC INFORMATION MAY BE MODIFIED UNINTENTIONALLY OR OTHERWISE, ALLEN & MAJOR ASSOCIATES, INC. MAY REMOVE ALL INDICATION OF THE DOCUMENT'S AUTHORSHIP ON THE MAGNETIC MEDIA. PRINTED REPRESENTATIONS OF THE DRAWINGS AND SPECIFICATIONS ISSUED SHALL BE THE ONLY RECORD COPIES OF ALLEN & MAJOR ASSOCIATES, INC.'S WORK PRODUCT.

DRAWING TITLE: LANDSCAPE PLAN
SHEET No. C-8D

Copyright©2015 Allen & Major Associates, Inc. All Rights Reserved

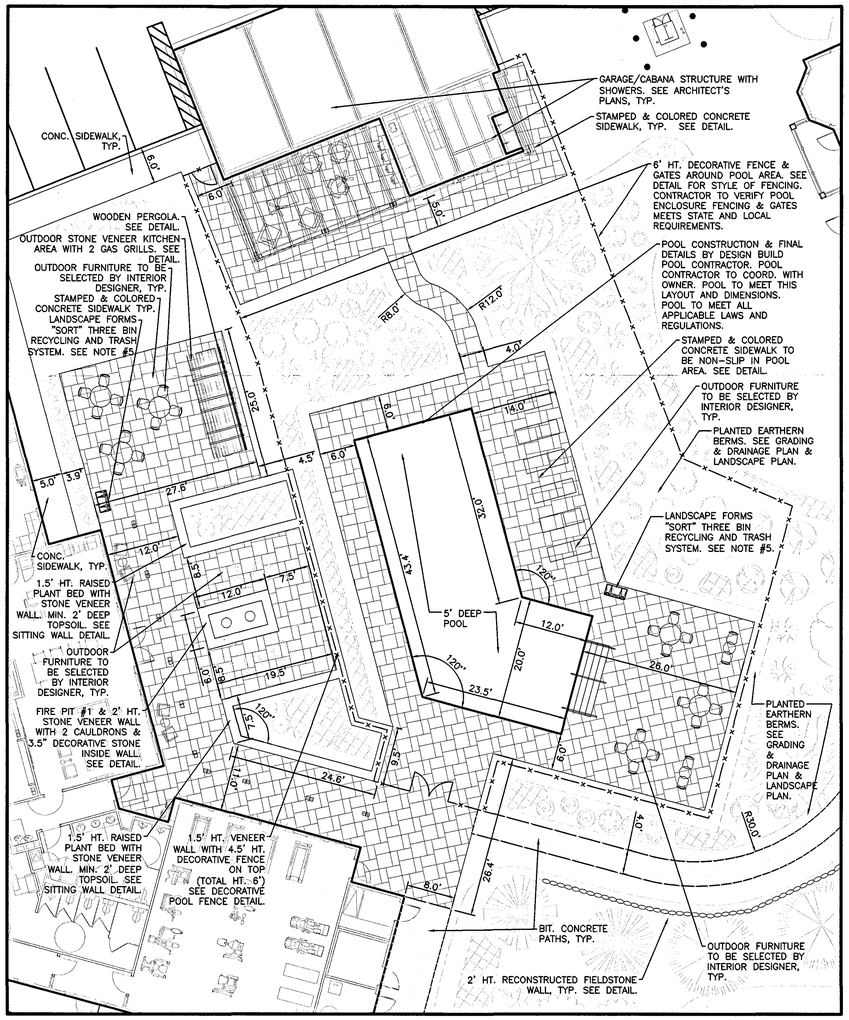

DETAILED POOL AREA AMENITIES PLAN (1)
SCALE 1" = 10'

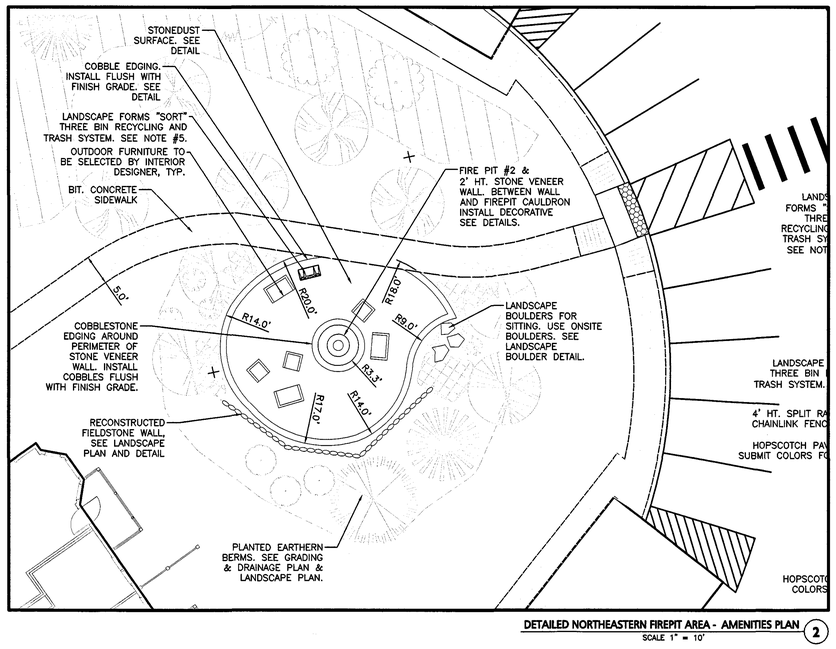

DETAILED NORTHEASTERN FIREPIT AREA - AMENITIES PLAN (2)
SCALE 1" = 10'

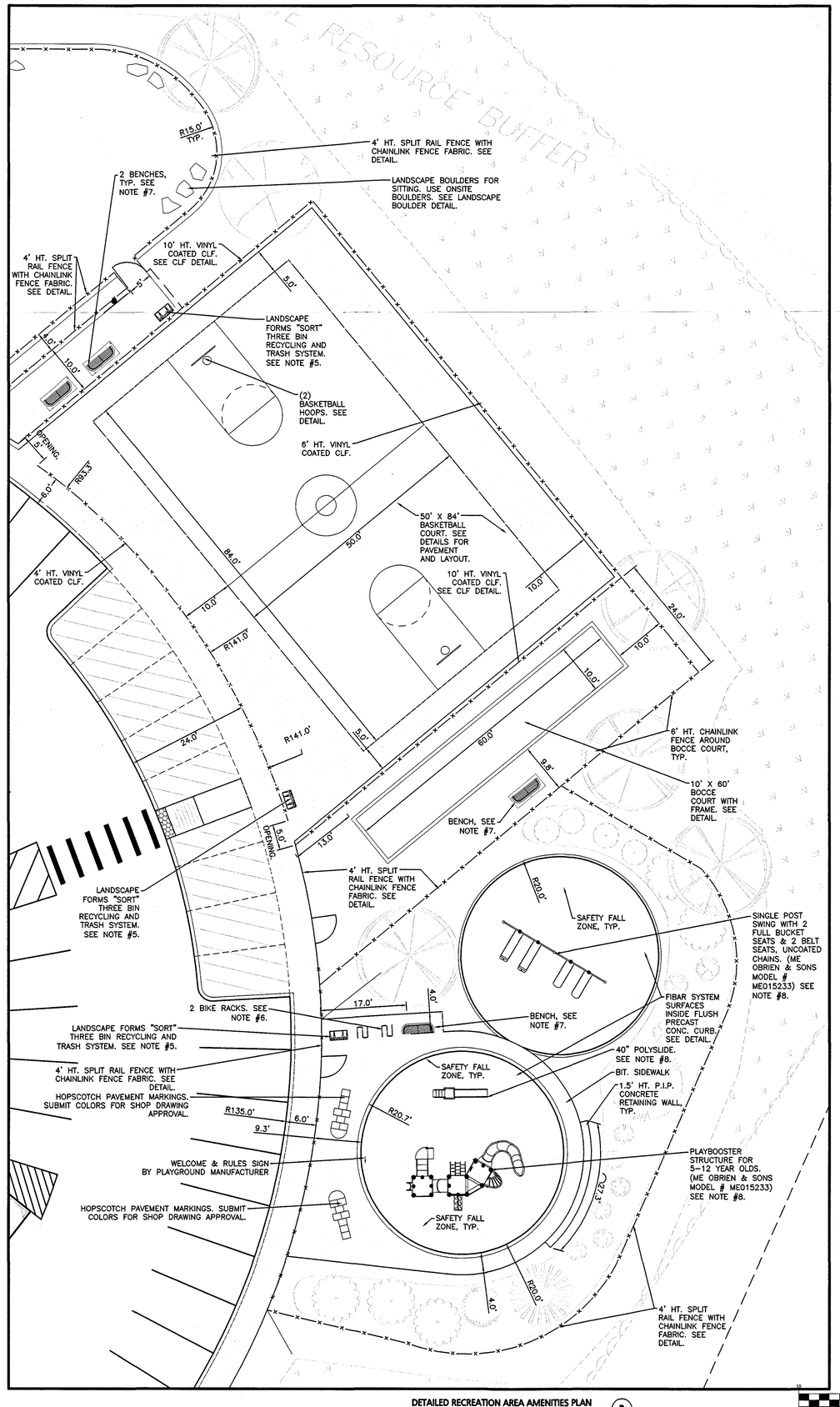

DETAILED RECREATION AREA AMENITIES PLAN (3)
SCALE 1" = 10'

LEGEND:

- PROP. PROPERTY LINE
- SIGN
- BOLLARD
- BUILDING
- BUILDING ARCHITECTURE
- BUILDING INTERIOR WALLS
- MAIN BUILDING ENTRANCE
- CURB
- RETAINING WALL
- PARKING STRIPING
- FUTURE PARKING SPACES
- ROADWAY STRIPING
- TRAFFIC ARROWS
- HEAVY DUTY CONCRETE
- CONCRETE SIDEWALK
- BITUMINOUS SIDEWALK
- ADA ACCESSIBLE RAMP
- ADA DET. WARNING SURFACE
- JERSEY BARRIERS
- SETBACK LINE
- PARKING COUNT (10)
- FENCE. SEE PLAN FOR TYPE.
- TRANSFORMER
- STOP LINE (SL)

NOTES:

1. THE LOCATIONS OF EXISTING UNDERGROUND UTILITIES ARE SHOWN IN AN APPROXIMATE WAY ONLY AND HAVE NOT BEEN INDEPENDENTLY VERIFIED BY THE OWNER OR IT'S REPRESENTATIVE. THE CONTRACTOR SHALL DETERMINE THE EXACT LOCATION OF ALL EXISTING UTILITIES BEFORE COMMENCING WORK, AND AGREES TO BE FULLY RESPONSIBLE FOR ANY AND ALL DAMAGES WHICH MIGHT BE OCCASIONED BY THE CONTRACTOR'S FAILURE TO EXACTLY LOCATE AND PRESERVE ANY AND ALL UNDERGROUND UTILITIES.
2. THE INFORMATION SHOWN ON THIS PLAN IS THE SOLE PROPERTY OF ALLEN & MAJOR ASSOCIATES, INC. IT'S INTENDED USE IS TO PROVIDE INFORMATION. ANY ALTERATION, MISUSE, OR RECALCULATION OF INFORMATION OR DATA WITHOUT THE EXPRESSED, WRITTEN CONSENT OF ALLEN & MAJOR ASSOCIATES, INC. IS STRICTLY PROHIBITED.
3. THE CONTRACTOR SHALL CONTACT "DIGSAFE" AND THE TOWN OF BOXBOROUGH DEPARTMENT OF PUBLIC WORKS AT LEAST 72 HOURS PRIOR TO ANY EXCAVATION WORK TO REQUEST THE LOCATION OF THE EXISTING UTILITIES.

   DIGSAFE: 1-800-344-7233
   BOXBOROUGH DEPT. OF PUBLIC WORKS: 1-978-264-1790
4. SEE THE ABBREVIATIONS AND NOTES PLAN AND DETAILS FOR FURTHER INFORMATION.
5. TRASH AND RECYCLING BINS TO BE FROM LANDSCAPE FORMS "SORT" 3 BIN TRASH AND RECYCLING SYSTEM. INSTALL PER MANUFACTURERS RECOMMENDATIONS. COLOR & FINISH CHOSEN BY OWNER. PROVIDE SHOP DRAWING TO A&M FOR APPROVAL PRIOR TO ORDERING.
6. BIKE RACKS TO BE FROM LANDSCAPE FORMS; 1-800-430-6209 MODEL FLO BIKE RACK 28" X 26" X 32" POWERCOATED AND SURFACE MOUNTED TO 12' X 6.5' BIT. CONC. PAD (EXCEPT RECREATION AREA RACK MOUNTED TO BIT. CONC.). SURFACE MOUNT PER MANUFACTURERS RECOMMENDATIONS. POWERCOAT COLOR SELECTED BY OWNER. PROVIDE SHOP DRAWINGS FOR APPROVAL PRIOR TO ORDERING.
7. BENCHES TO BE FROM LANDSCAPE FORMS; MODEL: VILLAGE GREEN BENCH WITH END ARMS. 25" X 32" X 70". POWERCOAT COLOR SELECTED BY OWNER. BENCHES TO BE PERMANENT SURFACE MOUNTED TO CONCRETE WITH APPROPRIATE HARDWARE PER MANUFACTURERS RECOMMENDATIONS. PROVIDE SHOP DRAWINGS FOR APPROVAL PRIOR TO ORDERING.
8. PLAYGROUND EQUIPMENT TO BE BY LANDSCAPE STRUCTURES INC. 601 7TH STREET SOUTH DELANO, MN 55328 USA, (888-4FUNLS) ACCORDING TO THE DESIGN PREPARED BY O'BRIEN AND SONS (LOCAL DISTRIBUTOR AND INSTALLERS OF LANDSCAPE FORMS), 93 WEST STREET P.O. BOX 650 MEDFIELD, MASSACHUSETTS 02052-0650 (508-359-4200). EQUIPMENT TO BE INSTALLED PER MANUFACTURERS RECOMMENDATIONS. PROVIDE SHOP DRAWINGS FOR APPROVAL PRIOR TO ORDERING.

DIG SAFE

BEFORE YOU DIG CALL 811 OR 1-888-DIG-SAFE 1-888-344-7233

GRAPHIC SCALE

(IN FEET)
1 inch = 10 ft.

N:\PROJECTS\2075-01\CIVIL\DRAWINGS\CURRENT\2075-01 - SITE AMENITIES.DWG

JPI

COMMONWEALTH OF MASSACHUSETTS
TIMOTHY J. WILLIAMS
CIVIL
No. 43119
REGISTERED PROFESSIONAL ENGINEER

PROFESSIONAL ENGINEER FOR ALLEN & MAJOR ASSOCIATES, INC.

REV	DATE	DESCRIPTION
9.	07/08/2015	ISSUED FOR DEFINITIVE SITE PLAN
8.	06/12/2015	REVISED PER FIRE DEPARTMENT COMMENTS
7.	05/15/2015	ISSUED FOR PERMIT
6.	05/05/2015	ISSUED FOR DEP PERMIT APPROVAL
5.	05/04/2015	REVISED FOR PRICING
4.	03/26/2015	REVISED PER TOWN COMMENTS
3.	03/02/2015	ISSUED FOR MEPA
2.	02/27/2015	REVISED PER TOWN COMMENTS
1.	02/12/2015	ISSUED FOR ZONING BOARD OF APPEALS

APPLICANT:
JPI
3 WEST MAIN STREET, SUITE 203
IRVINGTON, NY 10533

PROJECT:
DEFINITIVE SITE PLAN SET
JEFFERSON AT BEAVER BROOK
BOXBOROUGH, MA

PROJECT NO.	2075-01	DATE:	02-11-2015
SCALE:	1"=10'	DWG. NAME:	C2075-10
DESIGNED BY:	JG/SJL	CHECKED BY:	RB/CMQ

PREPARED BY:

ALLEN & MAJOR ASSOCIATES, INC.
civil & structural engineering • land surveying
environmental consulting • landscape architecture
www.allenmajor.com
100 COMMERCE WAY
P.O. BOX 2118
WOBURN MA 01888-0118
TEL: (781) 935-6889
FAX: (781) 935-2896
WOBURN, MA • LAKEVILLE, MA • MANCHESTER, NH

THIS DRAWING HAS BEEN PREPARED IN ELECTRONIC FORMAT. CLIENT/CLIENT'S REPRESENTATIVE OR CONSULTANT MAY BE PROVIDED COPIES OF DRAWINGS AND SPECIFICATIONS ON MAGNETIC MEDIA FOR HIS/HER INFORMATION AND USE FOR SPECIFIC APPLICATION TO THIS PROJECT. DUE TO THE POTENTIAL THAT THE MAGNETIC INFORMATION MAY BE MODIFIED UNINTENTIONALLY OR OTHERWISE, ALLEN & MAJOR ASSOCIATES, INC. MAY REMOVE ALL INDICATION OF THE DOCUMENTS AUTHORSHIP ON THE MAGNETIC MEDIA. PRINTED REPRESENTATIONS OF THE DRAWINGS AND SPECIFICATIONS ISSUED SHALL BE THE ONLY RECORD COPIES OF ALLEN & MAJOR ASSOCIATES, INC.'S WORK PRODUCT.

DRAWING TITLE: SITE AMENITIES PLAN

SHEET No. C-9

Copyright©2015 Allen & Major Associates, Inc. All Rights Reserved

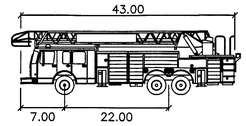

Aerial Fire Truck

	feet
Width	: 8.50
Track	: 8.50
Lock to Lock Time	: 6.0
Steering Angle	: 33.3

NOTES:

1. THE INFORMATION SHOWN ON THIS PLAN IS THE SOLE PROPERTY OF ALLEN & MAJOR ASSOCIATES, INC. IT'S INTENDED USE IS TO PROVIDE INFORMATION. ANY ALTERATION, MISUSE, OR RECALCULATION OF INFORMATION OR DATA WITHOUT THE EXPRESSED, WRITTEN CONSENT OF ALLEN & MAJOR ASSOCIATES, INC. IS STRICTLY PROHIBITED.

2. ALL STANDPIPE AND HYDRANT LOCATIONS TO BE REVIEWED WITH FIRE DEPARTMENT PRIOR TO INSTALLATIONS.

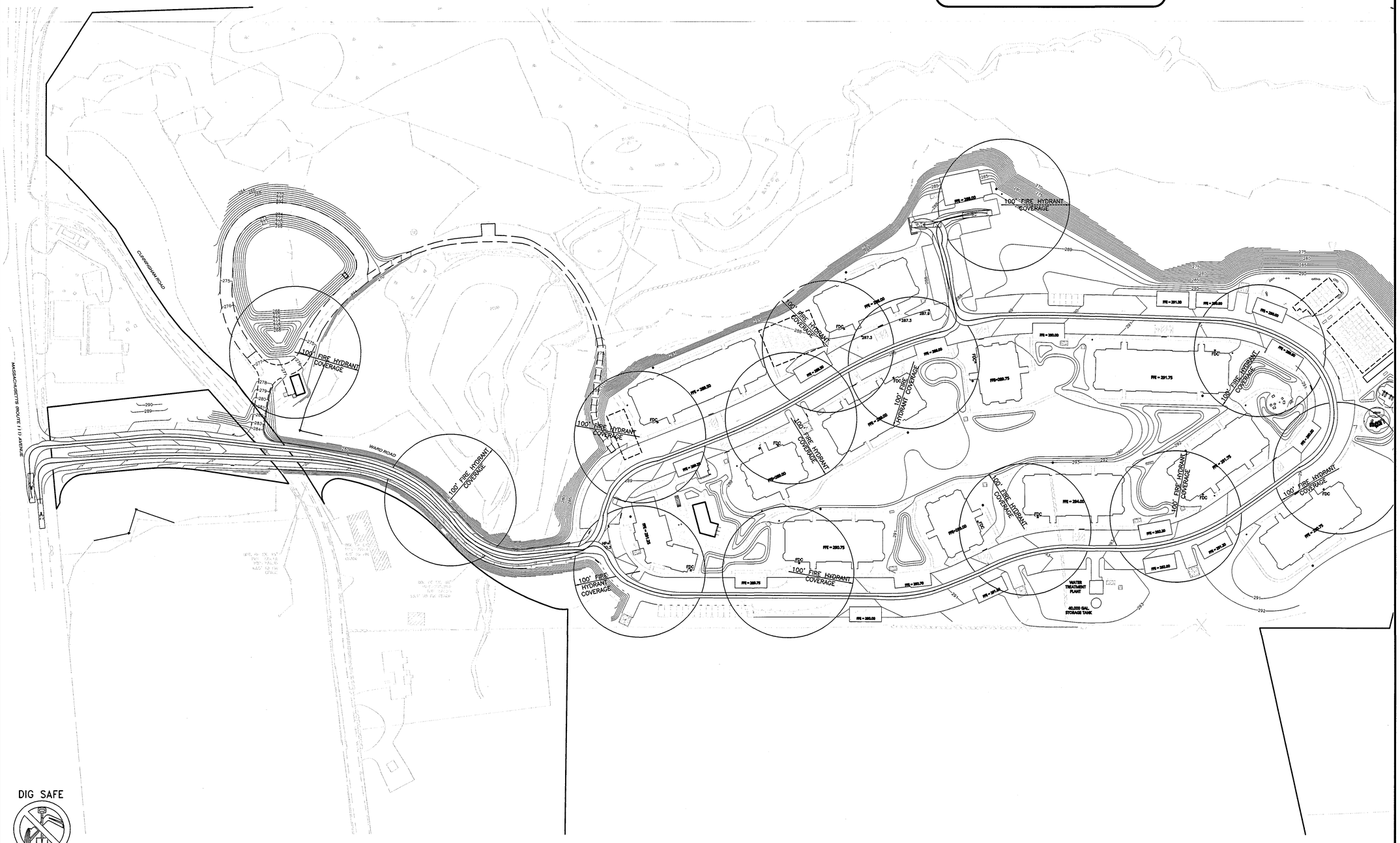

DIG SAFE

BEFORE YOU DIG
CALL 811 OR
1-888-DIG-SAFE
1-888-344-7233

GRAPHIC SCALE

50 0 30 60 120 240

(IN FEET)
1 inch = 60 ft.

N:\PROJECTS\2075-01\CIVIL\DRAWINGS\CURRENT\2075-01 - FIRE PROTECTION PLANS.DWG

WAIVERS OF TOWN OF BOXBOROUGH ZONING BYLAWS:

4.4003(1) USE REGULATION SCHEDULE
WAIVER TO PERMIT SINGLE-FAMILY AND MULTI-FAMILY ATTACHED RESIDENTIAL USES NOT OTHERWISE PERMITTED IN THE INDUSTRIAL/COMMERCIAL DISTRICT (I.E. THE PROPOSED TWO (2) SINGLE FAMILY DWELLINGS AND THE PROPOSED 244 APARTMENT UNITS IN ELEVEN (11) MULTI-FAMILY BUILDINGS, FOR A TOTAL OF 246 UNITS)

4.4033 USE REGULATION SCHEDULE
WAIVER TO PERMIT A USE WHICH IS NOT OTHERWISE ACCESSORY TO INDUSTRIAL-COMMERCIAL USES, I.E., A CLUBHOUSE/RENTAL OFFICE.

5.5002 DIMENSIONAL SCHEDULE
WAIVER OF REQUIREMENT FOR A MAXIMUM FLOOR AREA RATIO OF 0.10.

6.6004 SURFACE, CIRCULATION, AND LANDSCAPING REQUIREMENTS
WAIVER OF REQUIREMENT THAT AUTOMOBILE PARKING SPACES SHALL NOT BE LESS THAN 10 FEET BY 20 FEET, IN ORDER TO ALLOW PARKING SPACE OF 9 FEET BY 18 FEET.

6.6103 MULTIPLE BUILDINGS ON ONE LOT
WAIVER OF REQUIREMENT THAT WHERE MORE THAN ONE BUILDING IS PROPOSED TO BE BUILT UPON A LOT, THE PLAN SHALL BE REVIEWED BY THE PLANNING BOARD REGARDING ADEQUACY OF ACCESS TO BUILDINGS, IN ORDER TO SUBSTITUTE THE PERMISSION FROM THE ZONING BOARD OF APPEALS GRANTED UNDER THIS COMPREHENSIVE PERMIT.

6.6105 PRIVATE/COMMON DRIVEWAYS IN THE, BUSINESS, BUSINESS 1, OFFICE PARK, TOWN CENTER, AND INDUSTRIAL-COMMERCIAL DISTRICTS
WAIVER OF THE REQUIREMENT THAT PRIVATE/COMMON DRIVEWAYS ARE ALLOWED IN THE IC DISTRICT ONLY BY SPECIAL PERMIT OF THE PLANNING BOARD, IN ORDER TO SUBSTITUTE THE PERMISSION FROM THE ZONING BOARD OF APPEALS UNDER THIS COMPREHENSIVE PERMIT.

7.7004(G) SPECIAL REGULATIONS AQUIFER PROTECTION DISTRICT
WAIVER OF REQUIREMENT THAT THERE BE NO DISPOSAL OF SANITARY WASTE TO A SUBSURFACE DISPOSAL SYSTEM IN QUANTITIES EXCEEDING 440 GALLONS PER DAY PER ACRE OF AQUIFER PROTECTION DISTRICT CONTAINED WITHIN THE LOT, IN ORDER TO ALLOW QUANTITIES OF UP TO 750 GALLONS PER DAY PER ACRE OF THE SITE IN THE AQUIFER PROTECTION DISTRICT IN THE EVENT RESERVE LEACHING FIELDS ARE USED.

7.7007(1) DESIGN REQUIREMENTS
WAIVER OF REQUIREMENT THAT WHERE A PORTION OF THE SITE IS LOCATED OUTSIDE OF THE AQUIFER PROTECTION DISTRICT, POTENTIAL POLLUTION SOURCES, SUCH AS ON SITE DISPOSAL SYSTEMS, SHOULD BE LOCATED OUTSIDE THE DISTRICT BOUNDARIES, IN ORDER TO ALLOW RESERVE LEACHING FIELD TO BE LOCATED WITHIN THE AQUIFER PROTECTION DISTRICT.

7.7104(G) AND (N) W-DISTRICT USE REGULATIONS
WAIVER OF REQUIREMENTS FOR SPECIAL PERMIT FOR USE IN THE W-DISTRICT, IN ORDER TO SUBSTITUTE APPROVAL UNDER THIS COMPREHENSIVE PERMIT.

7.7106 SUBMITTALS
WAIVER OF REQUIREMENTS FOR SPECIAL PERMIT APPLICATIONS TO BE PREPARED AND SUBMITTED TO THE BOARD OF APPEALS, IN ORDER TO PERMIT ONE COMPREHENSIVE SUBMISSION TO THE BOARD TO BE ACTED ON UNDER G.L. C. 40B, §21.

7.7109 PROCEDURES
WAIVER OF REQUIREMENT FOR SPECIAL PERMIT APPLICATIONS TO BE PREPARED AND SUBMITTED TO THE BOARD OF APPEALS IN ORDER TO PERMIT A SINGLE COMPREHENSIVE PERMIT SUBMISSION TO THE BOARD TO BE ACTED UPON UNDER G.L. C.40B, §21.

7.7200 LANDS BORDERING THE W-DISTRICT
WAIVER OF REQUIREMENT FOR SPECIAL PERMIT TO PLACE STRUCTURES WITHIN ONE HUNDRED (100') FEET OF THE W-DISTRICT, IN ORDER TO PERMIT CONSTRUCTION OF WARD ROAD AND A FIRE POND WITHIN 100' OF W-DISTRICT.

8.8000 SITE PLAN APPROVAL & DESIGN REVIEW
WAIVER OF REQUIREMENT FOR SITE PLAN REVIEW BY THE PLANNING BOARD FOR THE CONSTRUCTION OF MULTI-FAMILY STRUCTURES AND PARKING AREAS ASSOCIATED WITH MULTI-FAMILY STRUCTURES.

9.9001(2) BUILDING PERMITS
WAIVER OF REQUIREMENT THAT NO BUILDING PERMIT SHALL BE ISSUED BY THE INSPECTOR OF BUILDINGS WITHOUT THE WRITTEN APPROVAL OF A SITE PLAN BY THE PLANNING BOARD.

WAIVERS FROM TOWN OF BOXBOROUGH REGULATIONS FOR THE WETLAND BYLAW:

SECTION 2.5.3.1 PERFORMANCE STANDARDS
WAIVER OF PROHIBITION OF PARKING LOTS, PERMANENT STRUCTURES, AND SANITARY WASTE DISPOSAL SYSTEMS WITHIN ADJACENT LAND RESOURCE AREA, IN ORDER TO ALLOW THE PLACEMENT OF THE PROPOSED SANITARY WASTE DISPOSAL SYSTEM, PARKING LOT, POND AND OTHER PERMANENT STRUCTURES WITHIN THE ADJACENT LAND RESOURCE AREA IN ACCORDANCE WITH THE SITE PLAN APPROVED FOR THE PROJECT UNDER THIS COMPREHENSIVE PERMIT.

WAIVERS FROM BOXBOROUGH COMPREHENSIVE PERMIT RULES OF THE BOXBOROUGH BOARD OF APPEALS:

SECTION 3.02(I) LIST OF REQUESTED EXCEPTIONS
WAIVER OF REQUIREMENT THAT APPLICANT PROVIDES A COMPLETE LIST OF ALL REQUESTED EXCEPTIONS AT THE TIME OF THE INITIAL FILING OF THE APPLICATION IN ORDER TO PERMIT THE LIST TO BE REVISED AS THE PROJECT EVOLVES THROUGH THE PERMITTING AND APPROVAL PROCESS.

COMMONWEALTH OF MASSACHUSETTS
TIMOTHY J. WILLIAMS
CIVIL
No. 43119
REGISTERED PROFESSIONAL ENGINEER
7/9/15

PROFESSIONAL ENGINEER FOR
ALLEN & MAJOR ASSOCIATES, INC.

REV	DATE	DESCRIPTION
9.	07/08/2015	ISSUED FOR DEFINITIVE SITE PLAN
8.	06/12/2015	REVISED PER FIRE DEPARTMENT COMMENTS
7.	05/15/2015	ISSUED FOR PERMIT
6.	05/05/2015	ISSUED FOR DEP PERMIT APPROVAL
5.	05/04/2015	REVISED FOR PRICING
4.	03/26/2015	REVISED PER TOWN COMMENTS
3.	03/02/2015	ISSUED FOR MEPA
2.	02/27/2015	REVISED PER TOWN COMMENTS
1.	02/12/2015	ISSUED FOR ZONING BOARD OF APPEALS

APPLICANT:

JPI
3 WEST MAIN STREET, SUITE 203
IRVINGTON, NY 10533

PROJECT:

DEFINITIVE SITE PLAN SET
JEFFERSON AT BEAVER BROOK
BOXBOROUGH, MA

PROJECT NO.	2075-01	DATE:	02-11-2015
SCALE:	1"=60'	DWG. NAME:	C2075-10
DESIGNED BY:	SJL	CHECKED BY:	CMQ

PREPARED BY:

ALLEN & MAJOR ASSOCIATES, INC.
civil & structural engineering ◆ land surveying
environmental consulting ◆ landscape architecture
www.allenmajor.com
100 COMMERCE WAY
P.O. BOX 2118
WOBURN MA 01888-0118
TEL: (781) 935-6889
FAX: (781) 935-2896
WOBURN, MA ◆ LAKEVILLE, MA ◆ MANCHESTER, NH

THIS DRAWING HAS BEEN PREPARED IN ELECTRONIC FORMAT. CLIENT/CLIENT'S REPRESENTATIVE OR CONSULTANT MAY BE PROVIDED COPIES OF DRAWINGS AND SPECIFICATIONS ON MAGNETIC MEDIA FOR HIS/HER INFORMATION AND USE FOR SPECIFIC APPLICATION TO THIS PROJECT. DUE TO THE POTENTIAL THAT THE MAGNETIC INFORMATION MAY BE MODIFIED UNINTENTIONALLY OR OTHERWISE, ALLEN & MAJOR ASSOCIATES, INC. MAY REMOVE ALL INDICATION OF THE DOCUMENT'S AUTHORSHIP ON THE MAGNETIC MEDIA. PRINTED REPRESENTATIONS OF THE DRAWINGS AND SPECIFICATIONS ISSUED SHALL BE THE ONLY RECORD COPIES OF ALLEN & MAJOR ASSOCIATES, INC.'S WORK PRODUCT.

DRAWING TITLE:	SHEET No.
FIRETRUCK TURNING PLAN	FP-1

Copyright©2015 Allen & Major Associates, Inc.
All Rights Reserved

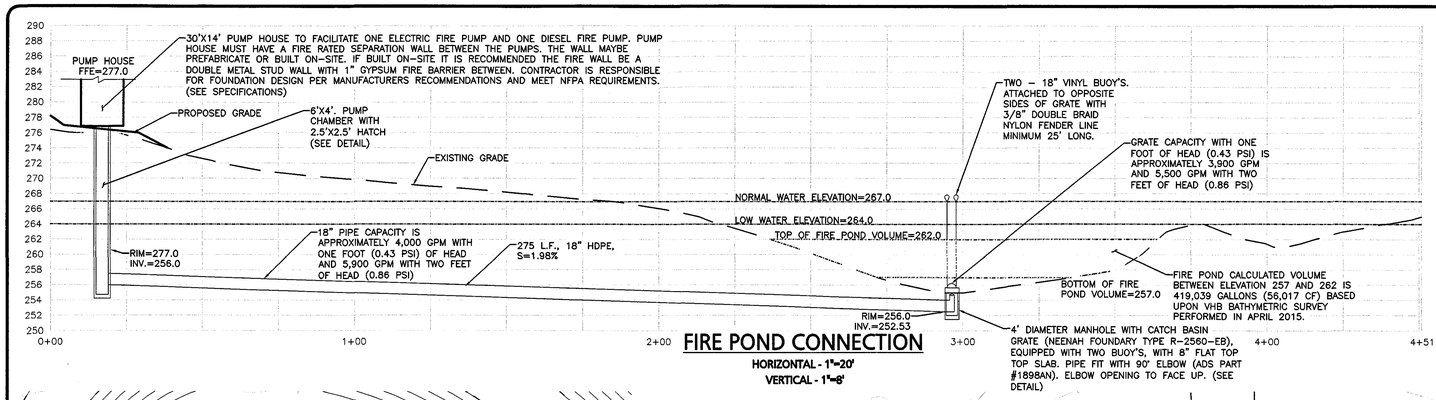

FIRE POND CONNECTION

HORIZONTAL - 1"=20'
VERTICAL - 1"=6'

NOTES:

1. THE INFORMATION SHOWN ON THIS PLAN IS THE SOLE PROPERTY OF ALLEN & MAJOR ASSOCIATES, INC. IT'S INTENDED USE IS TO PROVIDE INFORMATION. ANY ALTERATION, MISUSE, OR RECALCULATION OF INFORMATION OR DATA WITHOUT THE EXPRESSED, WRITTEN CONSENT OF ALLEN & MAJOR ASSOCIATES, INC. IS STRICTLY PROHIBITED.
2. ALL STANDPIPE AND HYDRANT LOCATIONS TO BE REVIEWED WITH FIRE DEPARTMENT PRIOR TO INSTALLATIONS.

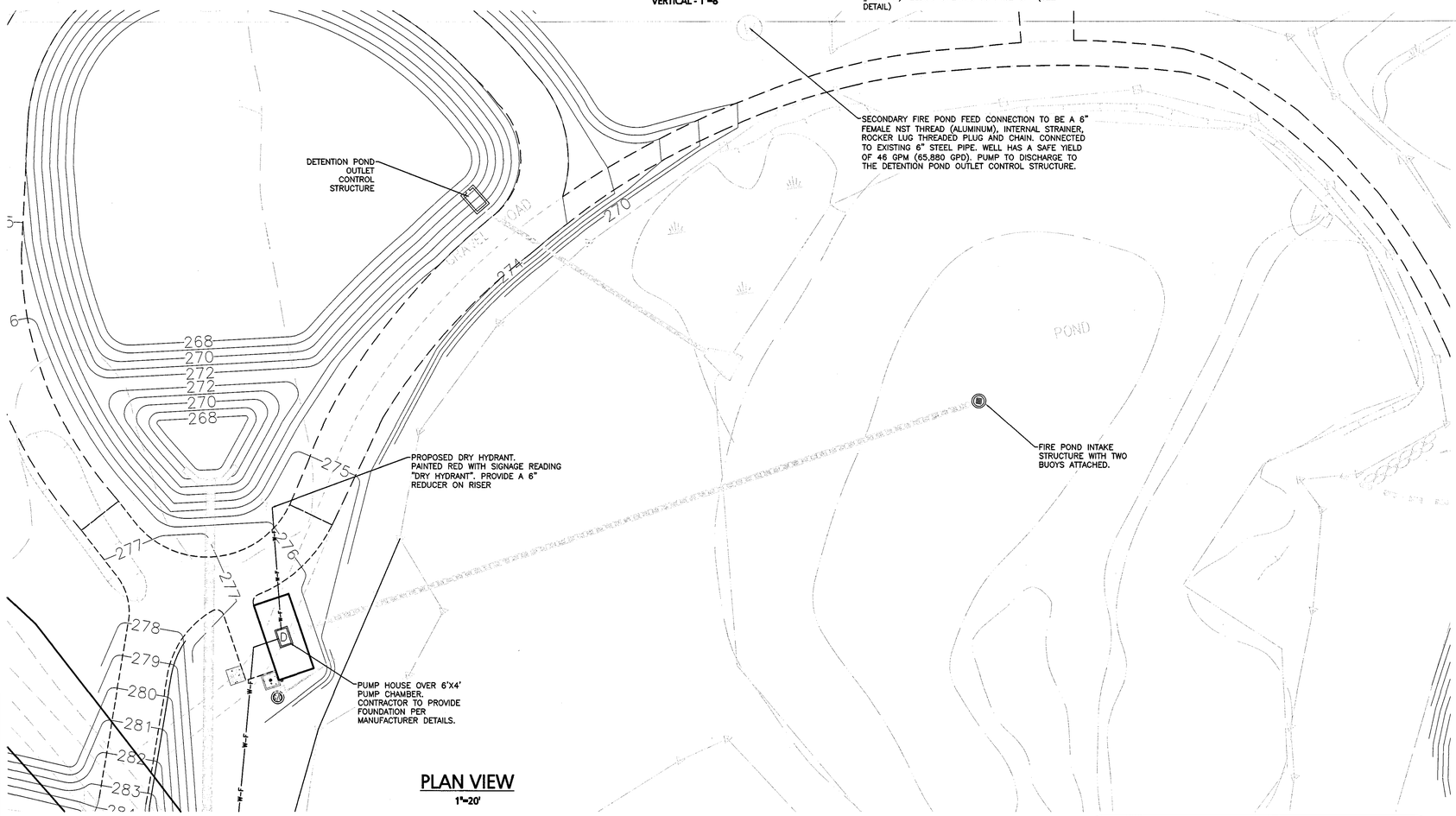

PLAN VIEW

1"=20'

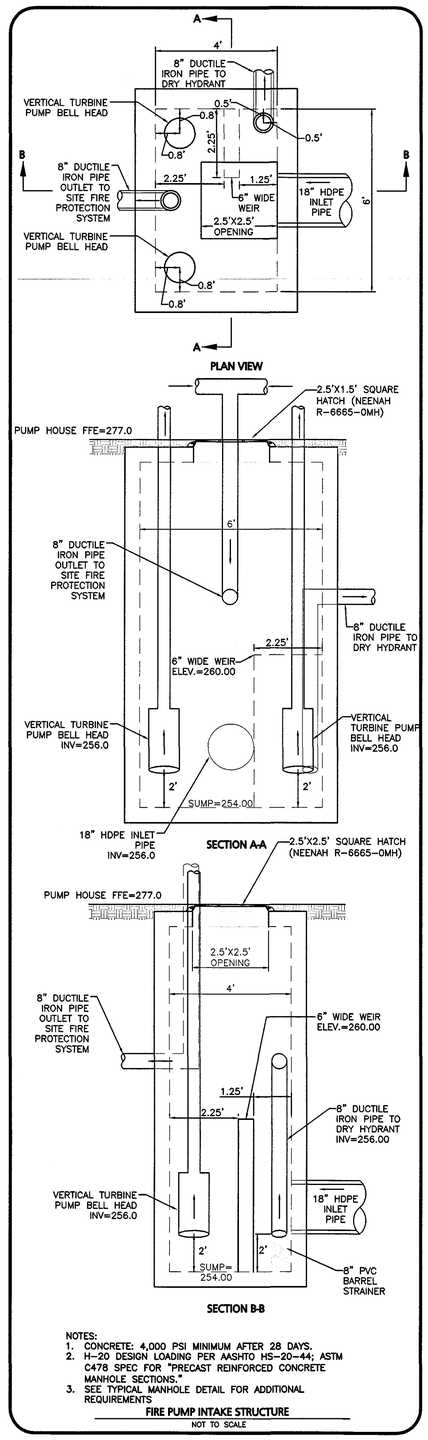

NOTES:
1. CONCRETE: 4,000 PSI MINIMUM AFTER 28 DAYS.
2. H-20 DESIGN LOADING PER AASHTO HS-20-44; ASTM C478 SPEC FOR "PRECAST REINFORCED CONCRETE MANHOLE SECTIONS."
3. SEE TYPICAL MANHOLE DETAIL FOR ADDITIONAL REQUIREMENTS

FIRE PUMP INTAKE STRUCTURE
NOT TO SCALE

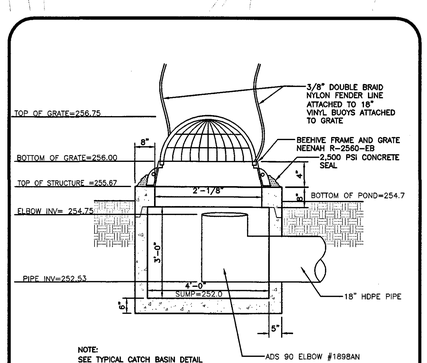

NOTE:
SEE TYPICAL CATCH BASIN DETAIL

FIRE POND INLET STRUCTURE
NOT TO SCALE

DIG SAFE

BEFORE YOU DIG CALL 811 OR 1-888-DIG-SAFE 1-888-344-7233

JPI

WAIVERS OF TOWN OF BOXBOROUGH ZONING BYLAWS:
4.4003(1) USE REGULATION SCHEDULE
WAIVER TO PERMIT SINGLE-FAMILY AND MULTI-FAMILY ATTACHED RESIDENTIAL USES NOT OTHERWISE PERMITTED IN THE INDUSTRIAL/COMMERCIAL DISTRICT (I.E., THE PROPOSED TWO (2) SINGLE FAMILY DWELLINGS AND THE PROPOSED 244 APARTMENT UNITS IN ELEVEN (11) MULTI-FAMILY BUILDINGS, FOR A TOTAL OF 246 UNITS)
4.4033 USE REGULATION SCHEDULE
WAIVER TO PERMIT A USE WHICH IS NOT OTHERWISE ACCESSORY TO INDUSTRIAL-COMMERCIAL USES, I.E., A CLUBHOUSE/RENTAL OFFICE.
5.5002 DIMENSIONAL SCHEDULE
WAIVER OF REQUIREMENT FOR A MAXIMUM FLOOR AREA RATIO OF 0.10.
6.6004 SURFACE, CIRCULATION, AND LANDSCAPING REQUIREMENTS
WAIVER OF REQUIREMENT THAT AUTOMOBILE PARKING SPACES SHALL NOT BE LESS THAN 10 FEET BY 20 FEET, IN ORDER TO ALLOW PARKING SPACE OF 9 FEET BY 18 FEET.
6.6103 MULTIPLE BUILDINGS ON ONE LOT
WAIVER OF REQUIREMENT THAT WHERE MORE THAN ONE BUILDING IS PROPOSED TO BE BUILT UPON A LOT, THE PLAN SHALL BE REVIEWED BY THE PLANNING BOARD REGARDING ASSURANCE OF ACCESS TO BUILDINGS, IN ORDER TO SUBSTITUTE THE PERMISSION FROM THE ZONING BOARD OF APPEALS GRANTED UNDER THIS COMPREHENSIVE PERMIT.
6.6105 PRIVATE/COMMON DRIVEWAYS IN THE BUSINESS, BUSINESS 1, OFFICE PARK, TOWN CENTER, AND INDUSTRIAL-COMMERCIAL DISTRICTS
WAIVER OF THE REQUIREMENT THAT PRIVATE/COMMON DRIVEWAYS ARE ALLOWED IN THE IC DISTRICT ONLY BY SPECIAL PERMIT OF THE PLANNING BOARD, IN ORDER TO SUBSTITUTE THE PERMISSION FROM THE ZONING BOARD OF APPEALS UNDER THIS COMPREHENSIVE PERMIT.
7.7004(2) SPECIAL REGULATIONS AQUIFER PROTECTION DISTRICT
WAIVER OF REQUIREMENT THAT THERE BE NO DISPOSAL OF SANITARY WASTE TO A SUBSURFACE DISPOSAL SYSTEM IN QUANTITIES EXCEEDING 440 GALLONS PER DAY PER ACRE OF AQUIFER PROTECTION DISTRICT CONTAINED WITHIN THE LOT, IN ORDER TO ALLOW QUANTITIES OF UP TO 750 GALLONS PER DAY PER ACRE OF THE SITE IN THE AQUIFER PROTECTION DISTRICT IN THE EVENT RESERVE LEACHING FIELDS ARE USED.
7.7007(1) DESIGN REQUIREMENTS
WAIVER OF REQUIREMENT THAT WHERE A PORTION OF THE SITE IS LOCATED OUTSIDE OF THE AQUIFER PROTECTION DISTRICT, POTENTIAL POLLUTION SOURCES, SUCH AS ON SITE DISPOSAL SYSTEMS, SHOULD BE LOCATED OUTSIDE THE DISTRICT BOUNDARIES, IN ORDER TO ALLOW RESERVE LEACHING FIELD TO BE LOCATED WITHIN THE AQUIFER PROTECTION DISTRICT.
7.7104(G) AND (H) W-DISTRICT USE REGULATIONS
WAIVER OF REQUIREMENTS FOR SPECIAL PERMIT FOR USE IN THE W-DISTRICT, IN ORDER TO SUBSTITUTE APPROVAL UNDER THIS COMPREHENSIVE PERMIT.
7.7106 SUBMITTALS
WAIVER OF REQUIREMENTS FOR SPECIAL PERMIT APPLICATIONS TO BE PREPARED AND SUBMITTED TO THE BOARD OF APPEALS, IN ORDER TO PERMIT ONE COMPREHENSIVE SUBMISSION TO THE BOARD TO BE ACTED ON UNDER G.L. C. 40B, §21.
7.7109 PROCEDURES
WAIVER OF REQUIREMENT FOR SPECIAL PERMIT APPLICATIONS TO BE PREPARED AND SUBMITTED TO THE BOARD OF APPEALS IN ORDER TO PERMIT A SINGLE COMPREHENSIVE PERMIT SUBMISSION TO THE BOARD TO BE ACTED UPON UNDER G.L. C.40B, §21.
7.7200 LANDS BORDERING THE W-DISTRICT
WAIVER OF REQUIREMENT FOR SPECIAL PERMIT TO PLACE STRUCTURES WITHIN ONE HUNDRED (100') FEET OF THE W-DISTRICT, IN ORDER TO PERMIT CONSTRUCTION OF WARD ROAD AND A FIRE POND WITHIN 100' OF W-DISTRICT.
8.8000 SITE PLAN APPROVAL & DESIGN REVIEW
WAIVER OF REQUIREMENT FOR SITE PLAN REVIEW BY THE PLANNING BOARD FOR THE CONSTRUCTION OF MULTI-FAMILY STRUCTURES AND PARKING AREAS ASSOCIATED WITH MULTI-FAMILY STRUCTURES.
9.9001(2) BUILDING PERMITS
WAIVER OF REQUIREMENT THAT NO BUILDING PERMIT SHALL BE ISSUED BY THE INSPECTOR OF BUILDINGS WITHOUT THE WRITTEN APPROVAL OF A SITE PLAN BY THE PLANNING BOARD.

WAIVERS FROM TOWN OF BOXBOROUGH REGULATIONS FOR THE WETLAND BYLAW:
SECTION 2.5.3.1 PERFORMANCE STANDARDS
WAIVER OF PROHIBITION OF PARKING LOTS, PERMANENT STRUCTURES, AND SANITARY WASTE DISPOSAL SYSTEMS WITHIN ADJACENT LAND RESOURCE AREA, IN ORDER TO ALLOW THE PLACEMENT OF THE PROPOSED SANITARY WASTE DISPOSAL SYSTEM, PARKING LOT, LAND AND OTHER PERMANENT STRUCTURES WITHIN THE ADJACENT LAND RESOURCE AREA, IN ACCORDANCE WITH THE SITE PLAN APPROVED FOR THE PROJECT UNDER THIS COMPREHENSIVE PERMIT.

WAIVERS FROM BOXBOROUGH COMPREHENSIVE PERMIT RULES OF THE ZONING BOARD OF APPEALS:
SECTION 3.02(I) LIST OF REQUESTED EXCEPTIONS
WAIVER OF REQUIREMENT THAT APPLICANT PROVIDES A COMPLETE LIST OF ALL REQUESTED EXCEPTIONS AT THE TIME OF THE INITIAL FILING OF THE APPLICATION IN ORDER TO PERMIT THE LIST TO BE REVISED AS THE PROJECT EVOLVES THROUGH THE PLANNING AND APPROVAL PROCESS.

COMMONWEALTH OF MASSACHUSETTS TIMOTHY J. WILLIAMS CIVIL No. 43119 REGISTERED PROFESSIONAL ENGINEER

PROFESSIONAL ENGINEER FOR ALLEN & MAJOR ASSOCIATES, INC.

REV	DATE	DESCRIPTION
9.	07/08/2015	ISSUED FOR DEFINITIVE SITE PLAN
8.	06/12/2015	REVISED PER FIRE DEPARTMENT COMMENTS
7.	05/15/2015	ISSUED FOR PERMIT
6.	05/05/2015	ISSUED FOR DEP PERMIT APPROVAL
5.	05/04/2015	REVISED FOR PRICING
4.	03/26/2015	REVISED PER TOWN COMMENTS
3.	03/02/2015	ISSUED FOR MEPA
2.	02/27/2015	REVISED PER TOWN COMMENTS
1.	02/12/2015	ISSUED FOR ZONING BOARD OF APPEALS

APPLICANT:
JPI
3 WEST MAIN STREET, SUITE 203
IRVINGTON, NY 10533

PROJECT:
DEFINITIVE SITE PLAN SET
JEFFERSON AT BEAVER BROOK
BOXBOROUGH, MA

PROJECT NO.	2075-01	DATE:	02-11-2015
SCALE:	1"=60'	DWG. NAME:	C2075-10
DESIGNED BY:	SJL	CHECKED BY:	CMQ

PREPARED BY:
ALLEN & MAJOR ASSOCIATES, INC.
civil & structural engineering ◆ land surveying
environmental consulting ◆ landscape architecture
www.allenmajor.com
100 COMMERCE WAY
P.O. BOX 2118
WOBURN MA 01888-0118
TEL: (781) 935-6889
FAX: (781) 935-2896
WOBURN, MA ◆ LAKEVILLE, MA ◆ MANCHESTER, NH

THIS DRAWING HAS BEEN PREPARED IN ELECTRONIC FORMAT. CLIENT/CLIENT'S REPRESENTATIVE OR CONSULTANT MAY BE PROVIDED COPIES OF DRAWINGS AND SPECIFICATIONS ON MAGNETIC MEDIA FOR HIS/HER INFORMATION AND USE FOR SPECIFIC APPLICATION TO THIS PROJECT. DUE TO THE POTENTIAL THAT THE MAGNETIC INFORMATION MAY BE MODIFIED UNINTENTIONALLY OR OTHERWISE, ALLEN & MAJOR ASSOCIATES, INC. MAY REMOVE ALL INDICATION OF THE DOCUMENTS AUTHORSHIP ON THE MAGNETIC MEDIA. PRINTED REPRESENTATIONS OF THE DRAWINGS AND SPECIFICATIONS ISSUED SHALL BE THE ONLY RECORD COPIES OF ALLEN & MAJOR ASSOCIATES, INC.'S WORK PRODUCT.

DRAWING TITLE: FIRE POND PLAN
SHEET No. FP-2

Copyright ©2015 Allen & Major Associates, Inc. All Rights Reserved

N:\PROJECTS\2075-01\CIVIL\DRAWINGS\CURRENT\2075-01 - FIRE PROTECTION PLANS.DWG

DESC.	SIGN	SIZE	MOUNTING HEIGHT	DESCRIPTION	REFLEC-TORIZED
R1-1	STOP	30" x 30"	7' - 0"	WHITE ON RED	YES
R7-8	RESERVED PARKING VAN ACCESSIBLE	12" x 20"	7' - 0"	GREEN & BLUE ON WHITE	NO
R7-8 (MODIFIED)	RESERVED PARKING VAN ACCESSIBLE	12" x 20"	7' - 0"	GREEN & BLUE ON WHITE	NO

1. TRAFFIC AND SAFETY SIGNAGE SHALL COMPLY WITH MUTCD STANDARDS.
2. LIMITED TIME PARKING SIGN SHALL BE PRODUCT #W4986 BY SAFETYSIGN.COM, BRIMAR INDUSTRIES, INC. (800) 274-6271 OR APPROVED EQUAL.

SIGN TABLE (1)
NOT TO SCALE

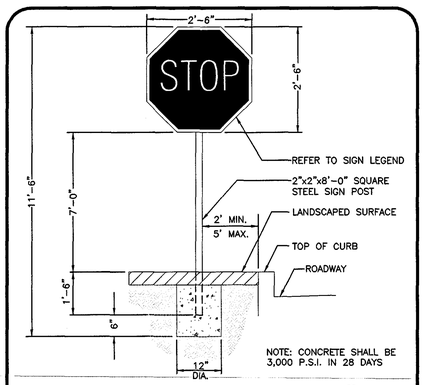

STOP SIGN DETAIL (2)
NOT TO SCALE

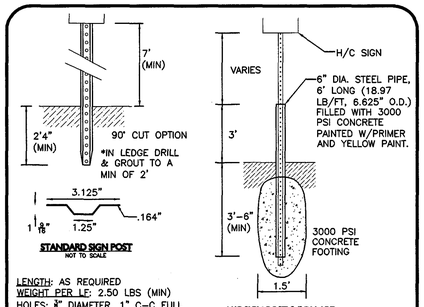

LENGTH: AS REQUIRED
WEIGHT PER LF: 2.50 LBS (MIN)
HOLES: ⅜" DIAMETER, 1" C-C FULL LENGTH
STEEL: SHALL CONFORM TO ASTM A-499 OR ASTM A-576
FINISH: SHALL BE PAINTED WITH 2 COATS OF AN APPROVED MEDIUM GREEN, BAKED ON OR AIR DRIED, PAINT OF WEATHER RESISTANT QUALITY.

NOTE:
1. STEEL PIPE BOLLARD & CONCRETE FOOTING TO BE USED ON POST MOUNTED SIGNS IN PAVED AREAS.

SIGN POST DETAILS (3)
N.T.S.

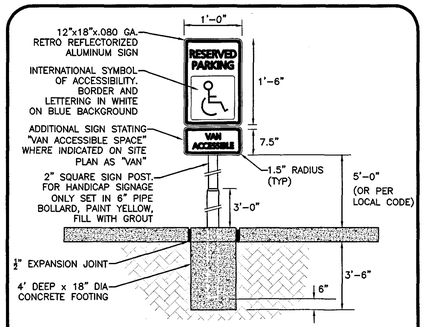

NOTES:
1. SPECIFIC CODE SHALL BE REFERENCED FOR LOCAL AND STATE REQUIREMENTS.
2. PROVIDE (1) SIGN PER HANDICAP SPACE. SEE SITE PLAN FOR EXACT LOCATION.
3. EXPANSION JOINT MATERIAL NOT REQUIRED WITH FLEXIBLE PAVEMENT.

ADA ACCESSIBLE PARKING / TRAFFIC CONTROL SIGNAGE (4)
NOT TO SCALE

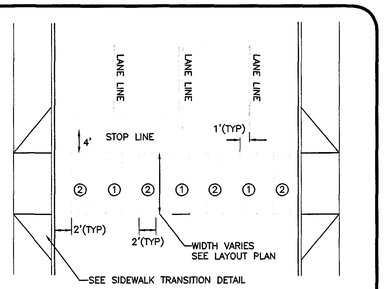

NOTE:

① LANE LINE STRIP: THIS IS LOCATED IN THE LINE WITH EACH LANE LINE AND HALF THE STRIP ON EACH SIDE.

② MID LINE STRIP: THIS IS LOCATED MIDWAY BETWEEN EACH LANE LINE STRIP.

CROSSWAK STRIPING (5)
NOT TO SCALE

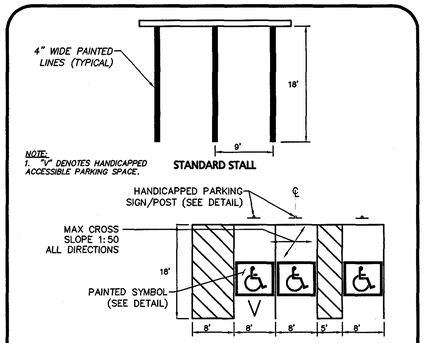

NOTE:
1. "V" DENOTES HANDICAPPED ACCESSIBLE PARKING SPACE.

STANDARD AND VAN ACCESSIBLE HANDICAPPED PARKING SPACE

HANDICAP AND STANDARD PARKING STRIPING (6)
NOT TO SCALE

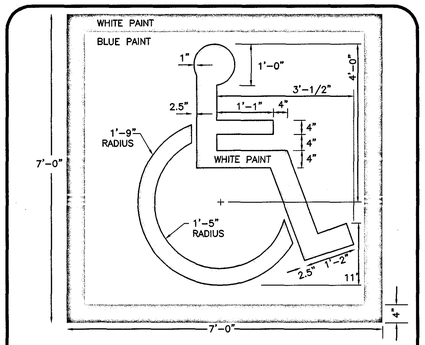

SYMBOL TO BE CENTERED ON WIDTH OF PARKING STALL. SYMBOL IS REQUIRED TO CONTRAST WITH BACKGROUND. USE WHITE ON BLUE (COLOR #105090 IN FEDERAL STANDARD 5952) DOUBLE COAT.

ACCESSIBLE PARKING STALL PAVEMENT MARKING (7)
NOT TO SCALE

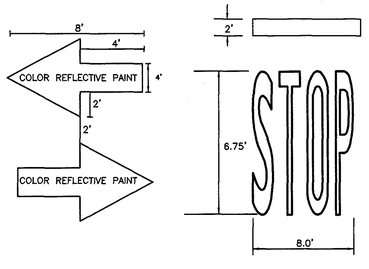

WHITE THERMOPLASTIC LETTERING/ARROWS (8)
NOT TO SCALE

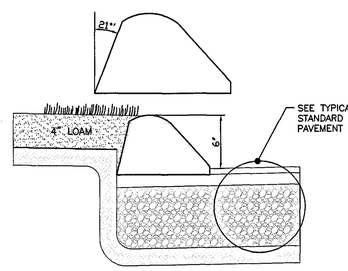

BITUMINOUS CONCRETE BERM (9)
NOT TO SCALE

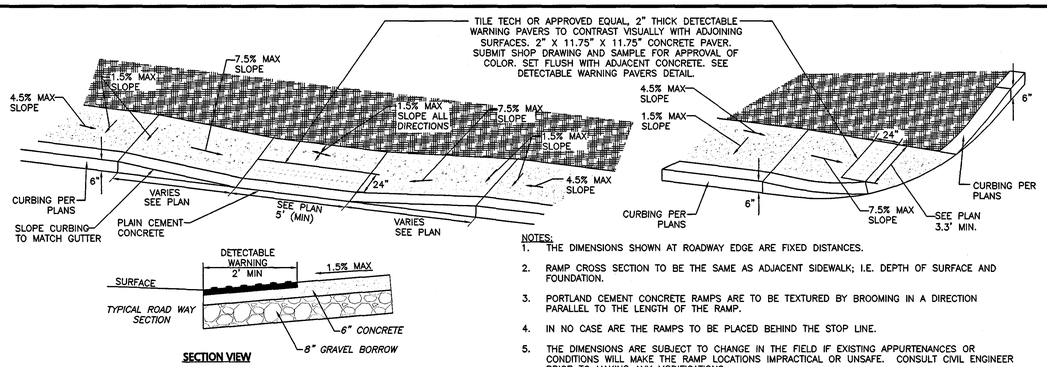

NOTES:
1. THE DIMENSIONS SHOWN AT ROADWAY EDGE ARE FIXED DISTANCES.
2. RAMP CROSS SECTION TO BE THE SAME AS ADJACENT SIDEWALK; I.E. DEPTH OF SURFACE AND FOUNDATION.
3. PORTLAND CEMENT CONCRETE RAMPS ARE TO BE TEXTURED BY BROOMING IN A DIRECTION PARALLEL TO THE LENGTH OF THE RAMP.
4. IN NO CASE ARE THE RAMPS TO BE PLACED BEHIND THE STOP LINE.
5. THE DIMENSIONS ARE SUBJECT TO CHANGE IN THE FIELD IF EXISTING APPURTENANCES OR CONDITIONS WILL MAKE THE RAMP LOCATIONS IMPRACTICAL OR UNSAFE. CONSULT CIVIL ENGINEER PRIOR TO MAKING ANY MODIFICATIONS.

HANDICAP CURB CUT & CURB TRANSITION (11)
NOT TO SCALE

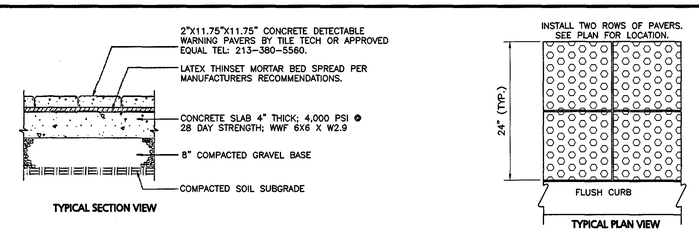

NOTES:
1. CONCRETE SLAB SHALL BE SLOPED 1.5% CROSS PITCH MAX TO PROVIDE COMPLETE SURFACE DRAINAGE. SEE GRADING PLAN & HANDICAP CURB CUT / CURB TRANSISTION DETAIL.
2. SLAB TO HAVE STEEL TROWEL AND FINE BROOM FINISH. DO NOT USE CURING COMPOUNDS. CONTRACTOR TO ADD EXPANSION JOINTS AND PREMOLDED FILLER AT EDGE OF TILES AND ADJACENT MATERIAL.
3. SET TILES FLUSH WITH ADJACENT MATERIALS.
4. SUBMIT SHOP DRAWINGS OF TILES AND SAMPLE FOR APPROVAL OF COLOR TO OWNER / ARCH.
5. INSTALL DETECTABLE WARNING PAVERS PER MANUFACTURER'S RECOMMENDATIONS.

DETECTABLE WARNING PAVERS (12)
NOT TO SCALE

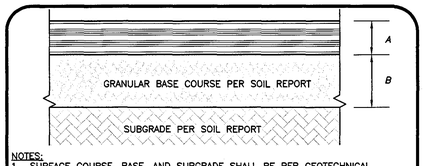

NOTES:
1. SURFACE COURSE, BASE, AND SUBGRADE SHALL BE PER GEOTECHNICAL ENGINEER'S RECOMMENDATIONS FOR LOCAL SOILS OR DRAINAGE CONDITIONS AND/OR METHODS.
2. SUBGRADE SHALL BE COMPACTED TO 95% OF PROCTOR.
3. COORDINATE PAVEMENT DETAIL WITH GOETECH & ENGINEER.
4. CONTRACTOR IS RESPONSIBLE TO REVIEW ALL GEOTECHNICAL RECOMMENDATIONS IN MOST CURRENT GEOTECHNICAL REPORT PROVIDED BY OWNER.
5. SEE GEOTECHNICAL REPORT FOR UNDERDRAIN LOCATIONS.

STANDARD DUTY PAVING
A = 1.5" ASPHALT CONCRETE - SURFACE COURSE (M3.11.03, TABLE A, TOP COURSE)
1.5" ASPHALT CONCRETE - BINDER COURSE (M3.11.03, TABLE A, BINDER COURSE)

B = 6" BASE COURSE - M2.01.7, DENSE GRADED CRUSHED STONE FOR SUBBASE 8" SUBBASE COURSE - MASSDOT ITEM M1.03.1 PROCESSED GRAVEL FOR SUBBASE, OR MASSDOT ITEM M1.03.0 GRAVEL BORROW

STANDARD DUTY BITUMINOUS ROADWAY (13)
NOT TO SCALE

NOTE:
TACK COAT - PROVIDE EMULSIFIED ASPHALT WHICH CONFORMS TO THE REQUIREMENTS OF THE STATE SPECIFICATIONS, DILUTED WITH ONE PART WATER TO ONE ONE PART ASPHALT FOLLOWING AASHTO M140/ASTM D997, OR AASHTO M208/ASTM D2397, SS-1H, CSS-1, OR CSS-1H.

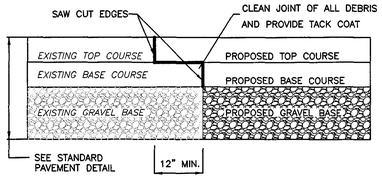

PAVEMENT KEY CUT DETAIL (14)
NOT TO SCALE

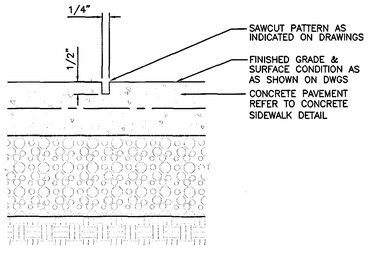

TYPICAL CONCRETE SAWCUT JOINT CONTROL (15)
NOT TO SCALE

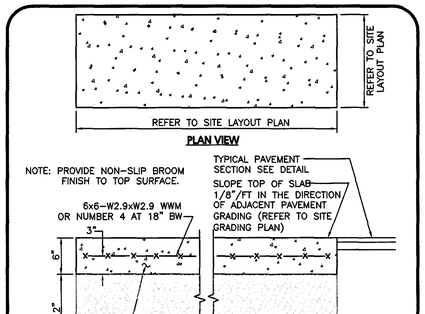

CONCRETE DUMPSTER PAD DETAIL (16)
NOT TO SCALE

LITTLETON LIGHT FIBERGLASS TRANSFORMER PAD (17)
NOT TO SCALE

WAIVERS OF TOWN OF BOXBOROUGH ZONING BYLAWS:
4.4003(1) USE REGULATION SCHEDULE
WAIVER TO PERMIT SINGLE-FAMILY AND MULTI-FAMILY ATTACHED RESIDENTIAL USES, NOT OTHERWISE PERMITTED IN THE INDUSTRIAL COMMERCIAL DISTRICT (I.E.: THE PROPOSED TWO (2) SINGLE FAMILY DWELLINGS AND THE PROPOSED 244 APARTMENT UNITS IN ELEVEN (11) MULTI-FAMILY BUILDINGS, FOR A TOTAL OF 246 UNITS)
4.4033 USE REGULATION SCHEDULE
WAIVER TO PERMIT A USE WHICH IS NOT OTHERWISE ACCESSORY TO INDUSTRIAL-COMMERCIAL USES, I.E., A CLUBHOUSE/RENTAL OFFICE.
5.5002 DIMENSIONAL SCHEDULE
WAIVER OF REQUIREMENT FOR A MAXIMUM FLOOR AREA RATIO OF 0.10.
8.6004 SURFACE, CIRCULATION, AND LANDSCAPING REQUIREMENTS
WAIVER OF REQUIREMENT THAT AUTOMOBILE PARKING SPACES SHALL NOT BE LESS THAN 10 FEET BY 20 FEET, IN ORDER TO ALLOW PARKING SPACE OF 9 FEET BY 18 FEET.
8.6103 MULTIPLE BUILDINGS ON ONE LOT
WAIVER OF REQUIREMENT THAT WHERE MORE THAN ONE BUILDING IS PROPOSED TO BE BUILT UPON A LOT, THE PLAN SHALL BE REVIEWED BY THE PLANNING BOARD REGARDING ADEQUACY OF ACCESS TO BUILDINGS, IN ORDER TO SUBSTITUTE THE PERMISSION FROM THE ZONING BOARD OF APPEALS GRANTED UNDER THIS COMPREHENSIVE PERMIT.
8.6105 PRIVATE/COMMON DRIVEWAYS IN THE BUSINESS, BUSINESS 1, OFFICE PARK, TOWN CENTER, AND INDUSTRIAL-COMMERCIAL DISTRICTS
WAIVER OF THE REQUIREMENT THAT PRIVATE/COMMON DRIVEWAYS ARE ALLOWED IN A DISTRICT ONLY BY SPECIAL PERMIT OF THE PLANNING BOARD, IN ORDER TO SUBSTITUTE THE PERMISSION FROM THE ZONING BOARD OF APPEALS UNDER THIS COMPREHENSIVE PERMIT.
7.7004(G) SPECIAL REGULATIONS AQUIFER PROTECTION DISTRICT
WAIVER OF REQUIREMENT THAT THERE BE NO DISPOSAL OF SANITARY WASTE TO A SUBSURFACE DISPOSAL SYSTEM IN QUANTITIES EXCEEDING 440 GALLONS PER DAY PER ACRE OF AQUIFER PROTECTION DISTRICT CONTAINED WITHIN THE LOT, IN ORDER TO ALLOW QUANTITIES OF UP TO 750 GALLONS PER DAY PER ACRE OF THE SITE IN THE AQUIFER PROTECTION DISTRICT IN THE EVENT RESERVE LEACHING FIELDS ARE USED.
7.7007(1) DESIGN REQUIREMENTS
WAIVER OF REQUIREMENT THAT WHERE A PORTION OF THE SITE IS LOCATED OUTSIDE OF THE AQUIFER PROTECTION DISTRICT, POTENTIAL POLLUTION SOURCES, SUCH AS ON SITE DISPOSAL SYSTEMS, SHOULD BE LOCATED OUTSIDE THE DISTRICT BOUNDARIES, IN ORDER TO ALLOW RESERVE LEACHING FIELD TO BE LOCATED WITHIN THE AQUIFER PROTECTION DISTRICT.
7.7104(G) AND (H) W-DISTRICT USE REGULATIONS
WAIVER OF REQUIREMENTS FOR SPECIAL PERMIT FOR USE IN THE W-DISTRICT, IN ORDER TO SUBSTITUTE APPROVAL UNDER THIS COMPREHENSIVE PERMIT.
7.7106 SUBMITTALS
WAIVER OF REQUIREMENTS FOR SPECIAL PERMIT APPLICATIONS TO BE PREPARED AND SUBMITTED TO THE BOARD OF APPEALS, IN ORDER TO PERMIT ONE COMPREHENSIVE SUBMISSION TO THE BOARD TO BE ACTED ON UNDER G.L. C.40B, §21.
7.7109 PROCEDURES
WAIVER OF REQUIREMENT FOR SPECIAL PERMIT APPLICATIONS TO BE PREPARED AND SUBMITTED TO THE BOARD OF APPEALS IN ORDER TO PERMIT A SINGLE COMPREHENSIVE PERMIT SUBMISSION TO THE BOARD TO BE ACTED UPON UNDER G.L. C.40B, §21.
7.720 LANDS BORDERING THE W-DISTRICT
WAIVER OF REQUIREMENT FOR SPECIAL PERMIT TO PLACE STRUCTURES WITHIN ONE HUNDRED (100') FEET OF THE W-DISTRICT, IN ORDER TO PERMIT CONSTRUCTION OF WARD ROAD AND A FIRE POND WITHIN 100' OF W-DISTRICT.
8.8000 SITE PLAN APPROVAL & DESIGN REVIEW
WAIVER OF REQUIREMENT FOR SITE PLAN REVIEW BY THE PLANNING BOARD, OR ITS ADMINISTRATOR, OF MULTI-FAMILY STRUCTURES AND PARKING AREAS ASSOCIATED WITH MULTI-FAMILY STRUCTURES.
8.9001(2) BUILDING PERMITS
WAIVER OF REQUIREMENT THAT NO BUILDING PERMIT SHALL BE ISSUED BY THE INSPECTOR OF BUILDINGS WITHOUT THE WRITTEN APPROVAL OF A SITE PLAN BY THE PLANNING BOARD.

WAIVERS FROM TOWN OF BOXBOROUGH REGULATIONS FOR THE WETLAND RETURN:
SECTION 2.5.3.1 PERFORMANCE STANDARDS
WAIVER OF PROHIBITION OF PARKING LOTS, PERMANENT STRUCTURES, AND SANITARY WASTE DISPOSAL SYSTEMS WITHIN ADJACENT LAND RESOURCE AREA, IN ORDER TO ALLOW THE PLACEMENT OF THE PROPOSED SANITARY WASTE DISPOSAL SYSTEM, PARKING LOT, ROAD AND OTHER PERMANENT STRUCTURES WITHIN THE ADJACENT LAND RESOURCE AREA IN ACCORDANCE WITH THE SITE PLAN APPROVED FOR THE PROJECT UNDER THIS COMPREHENSIVE PERMIT.

WAIVERS FROM BOXBOROUGH COMPREHENSIVE PERMIT RULES OF THE NORTHEAST DISTRICT OF OPERATION:
SECTION 3.02(1) LIST OF REQUESTED EXCEPTIONS
WAIVER OF REQUIREMENT THAT APPLICANT PROVIDES A COMPLETE LIST OF ALL REQUESTED EXCEPTIONS AT THE TIME OF THE INITIAL FILING OF THE APPLICATION IN ORDER TO PERMIT THE LIST TO BE REVISED AS THE PROJECT EVOLVES THROUGH THE HEARING AND APPROVAL PROCESS.

PROFESSIONAL ENGINEER FOR ALLEN & MAJOR ASSOCIATES, INC.

REV	DATE	DESCRIPTION
9.	07/08/2015	ISSUED FOR DEFINITIVE SITE PLAN
8.	06/12/2015	REVISED PER FIRE DEPARTMENT COMMENTS
7.	05/15/2015	ISSUED FOR PERMIT
6.	05/05/2015	ISSUED FOR DEP PERMIT APPROVAL
5.	05/04/2015	REVISED FOR PRICING
4.	03/26/2015	REVISED PER TOWN COMMENTS
3.	03/02/2015	ISSUED FOR MEPA
2.	02/27/2015	REVISED PER TOWN COMMENTS
1.	02/12/2015	ISSUED FOR ZONING BOARD OF APPEALS

APPLICANT:
JPI
3 WEST MAIN STREET, SUITE 203
IRVINGTON, NY 10533

PROJECT:
DEFINITIVE SITE PLAN SET
JEFFERSON AT BEAVER BROOK
BOXBOROUGH, MA

PROJECT NO.	2075-01	DATE:	02-11-2015
SCALE:	AS NOTED	DWG. NAME:	C2075-10
DESIGNED BY:	SJL	CHECKED BY:	CMQ

PREPARED BY:
ALLEN & MAJOR ASSOCIATES, INC.
civil & structural engineering • land surveying
environmental consulting • landscape architecture
www.allenmajor.com
100 COMMERCE WAY
P.O. BOX 2118
WOBURN MA 01888-0118
TEL: (781) 935-6889
FAX: (781) 935-2896
WOBURN, MA • LAKEVILLE, MA • MANCHESTER, NH

THIS DRAWING HAS BEEN PREPARED IN ELECTRONIC FORMAT. CLIENT/CLIENT'S REPRESENTATIVE OR CONSULTANT MAY BE PROVIDED COPIES OF DRAWINGS AND SPECIFICATIONS ON MAGNETIC MEDIA FOR HIS/HER INFORMATION AND USE FOR SPECIFIC APPLICATION TO THIS PROJECT. DUE TO THE POTENTIAL THAT THE MAGNETIC INFORMATION MAY BE MODIFIED UNINTENTIONALLY OR OTHERWISE, ALLEN & MAJOR ASSOCIATES, INC. MAY REMOVE ALL INDICATION OF THE DOCUMENT'S AUTHORSHIP ON THE MAGNETIC MEDIA. PRINTED REPRESENTATIONS OF THE DRAWINGS AND SPECIFICATIONS ISSUED SHALL BE THE ONLY RECORD COPIES OF ALLEN & MAJOR ASSOCIATES, INC.'S WORK PRODUCT.

DRAWING TITLE: DETAILS
SHEET No. D-1

Copyright©2015 Allen & Major Associates, Inc. All Rights Reserved

N:\PROJECTS\2075-01\CIVIL\DRAWINGS\CURRENT\2075-01 - DETAILS.DWG

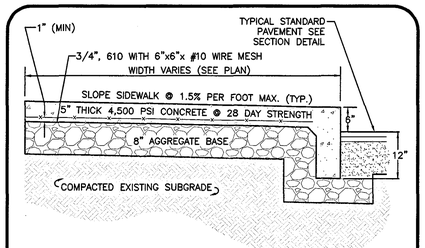

NOTES:
1. SIDEWALK TO HAVE TOOLED JOINTS IN A 5' x 5' (TYP.) GRID WITH EXPANSION JOINTS 15' ON CENTER AND PRE-MOLDED FILLER.
2. TOOLED JOINT 6" FROM FACE OF CURB.
3. SEE PLAN FOR ELEVATIONS AT CURB
4. SIDEWALK CROSS SLOPE TO BE 1.5% MAX & SIDEWALK LONGITUDINAL RUNNING SLOPE TO BE 4.5% MAX, TYP.
5. THE SURFACE SHALL BE FINISHED WITH A SOFT BRISTLED PUSH BROOM ACROSS THE ENTIRE SIDEWALK WIDTH, PERPENDICULAR TO THE DIRECTION OF PEDESTRIAN. "PICTURE FRAME" FINISHES SHOULD NOT BE PROVIDED.

MONOLITHIC CONCRETE CURB AT CONCRETE SIDEWALK (1)
NOT TO SCALE

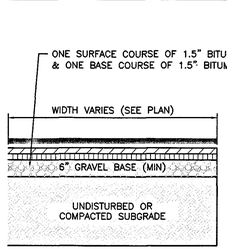

NOTES
1. SEE PLAN FOR ELEVATIONS.

BITUMUNOUS WALKWAY (2)
NOT TO SCALE

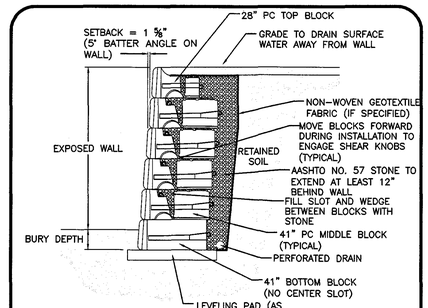

NOTES:
1. THIS DRAWING IS FOR REFERENCE ONLY AND ILLUSTRATES THE REDI-ROCK PC SERIES GRAVITY WALL
2. FINAL DESIGNS FOR CONSTRUCTION MUST BE PREPARED BY A GEOTECHNICAL ENGINEER USING THE ACTUAL CONDITIONS OF THE PROPOSED SITE.
3. FINAL WALL DESIGN MUST ADDRESS BOTH INTERNAL AND EXTERNAL DRAINAGE AND SHALL BE EVALUATED BY THE PROFESSIONAL ENGINEER WHO IS RESPONSIBLE FOR THE WALL DESIGN.

TYICAL GRAVITY WALL SECTION (3)
NOT TO SCALE

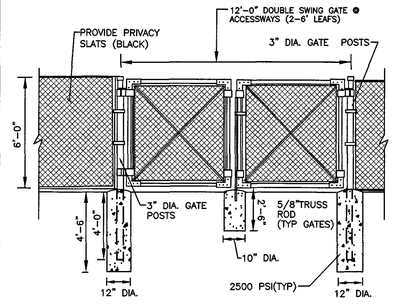

CHAIN LINK FENCE WITH GATE AT DUMPSTERS (4)
NOT TO SCALE

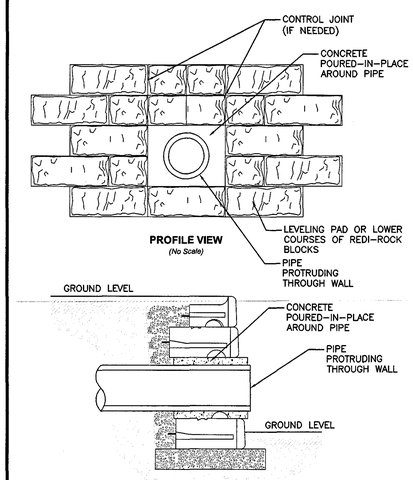

BASE LEVELING PAD NOTES:

1. THE LEVELING PAD IS TO BE CONSTRUCTED OF CRUSHED STONE OR 2000 PSI UNREINFORCED CONCRETE
2. THE BASE FOUNDATION IS TO BE APPROVED BY THE SITE GEOTECHNICAL ENGINEER PRIOR TO PLACEMENT O THE LEVELING PAD.

PIPE THROUGH WALL DETAIL (5)
NOT TO SCALE

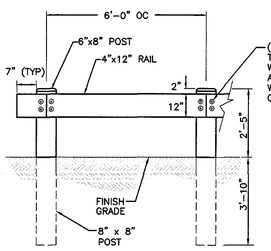

FRONT ELEVATION

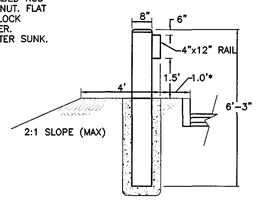

*IN SOME LOCATIONS THE FACE OF GUARDRAIL IS WILL BE FLUSH WITH THE FACE OF THE CURB – SEE PLAN

TYPICAL SECTION AT CURB

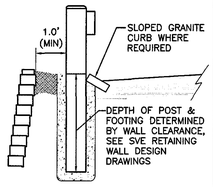

TYPICAL SECTION AT RETAIING WALL

NOTES:
1. ALL TIMBER STOCK TO BE PRESSURE TREATED.
2. ALL HARDWARE TO BE GALVANIZED STEEL.

WOOD BEAM GUARD RAIL (6)
NOT TO SCALE

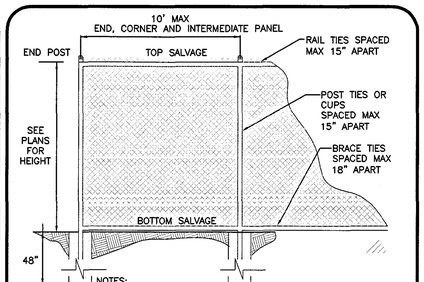

NOTES:
1. AT FENCING AGAINST WALLS, ALL POSTS TO BE SET USING "SLEEVE-IT" SEE DETAIL FOR FENCE POST BEHIND WALLS, IF INSTALLED AT MODULAR BLOCK WALLS.
2. ALL FENCE MATERIALS TO BE BLACK VINYL COATED.
3. AT DUMPSTER AREAS, INSTALL BLACK PVC PRIVACY SLATS IN FABRIC. PROVIDE SHOP DRAWING FOR APPROVAL. AT DUMPSTER AREAS INSTALL GATES WITH LOCKING MECHANISM INTO GROUND AND LOCK ACROSS BOTH LEAFS OF GATE.

BLACK VINYL COATED CHAIN LINK FENCE (7)
NOT TO SCALE

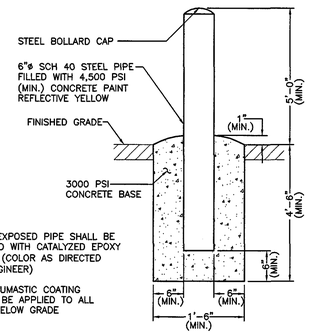

NOTES:
—ALL EXPOSED PIPE SHALL BE PAINTED WITH CATALYZED EPOXY PAINT. (COLOR AS DIRECTED BY ENGINEER)
—A BITUMASTIC COATING SHALL BE APPLIED TO ALL PIPE BELOW GRADE

FIXED PIPE BOLLARD AT TRANSFORMERS & GENERATORS (8)
NOT TO SCALE

NOTES:
1. PRIOR TO CONSTRUCTING THE SLOPE, THE EXISTING ORGANIC SURFACE SOIL SHALL BE REMOVED FROM BELOW THE PROPOSED SLOPE AREA, AND THE NATURAL, INORGANIC SOIL SUBGRADE SHOULD BE PROOF COMPACTED WITH AT LEAST 6 PASSES OF A 10-TON VIBRATORY ROLLER UNDER THE OBSERVATION OF A QUALIFIED GEOTECHNICAL ENGINEER, OR HIS/HER REPRESENTATIVE. ANY SOFT OR LOOSE ZONES IDENTIFIED BY THE PROOF ROLLING SHOULD BE EXCAVATED AND REPLACED WITH COMPACTED ON-SITE FILL.
2. THE SLOPE SHOULD BE CONSTRUCTED USING ON-SITE FILL AS SPECIFIED IN TABLE 2, PLACED IN COMPACTED LIFTS TO AT LEAST 92 PERCENT OF ITS MAXIMUM DRY DENSITY AS DETERMINED BY ASTM D1557, METHOD C (MODIFIED PROCTOR). NEW FILL SHOULD BE PLACED AND COMPACTED IN HORIZONTAL LIFTS BENCHED INTO THE EXISTING GROUND.
3. FOR LANDSCAPED SLOPES AT SLOPE ANGLES BETWEEN 2H:1V AND 3H:1V, WE RECOMMEND THAT A MAXIMUM THICKNESS OF 6 INCHES OF SCREENED TOPSOIL BE PLACED OVER THE SLOPE SURFACE. VEGETATIVE COVER SHOULD BE ESTABLISHED ON THE SLOPE SURFACE AS SOON AS PRACTICAL AFTER FINAL GRADING TO REDUCE EROSION AND THE POTENTIAL FOR SLOUGHING FAILURES. TOPSOIL THICKNESS MAY BE INCREASED ON SLOPES FLATTER THAN 3H:1V IN CONSULTATION WITH THE GEOTECHNICAL ENGINEER.
4. FOR SLOPE ANGLES STEEPER THAN 2H:1V, BUT NO STEEPER THAN 1.5H:1V, WE RECOMMEND PLACEMENT OF RIPRAP SLOPE STABILIZATION. THE SLOPE STABILIZATION SHOULD INCLUDE REMOVAL OF SURFACE ORGANIC SOILS, PLACEMENT OF ¾-INCH CRUSHED STONE AT LEAST 6 INCHES THICK ON THE SOIL SUBGRADE OVERLAIN BY RIPRAP (MASSDOT ITEM 2.02.4, MODIFIED ROCKFILL) AT LEAST 18 INCHES THICK MEASURED PERPENDICULAR TO THE SLOPE FACE. SLOPES STEEPER THAN 1.5H:1V ARE NOT RECOMMENDED.
5. IT IS RECOMMENDED THAT SURFACE WATER SWALES OR CURBING SHOULD BE PROVIDED AT THE CREST OF SOIL CUT AND FILL SLOPES TO INTERCEPT AND DIVERT RUNOFF FROM THE SLOPE FACE.
6. CONTRACTOR IS RESPONSIBLE TO REVIEW ALL GEOTECHNICAL RECOMMENDATIONS IN MOST CURRENT GEOTECHNICAL REPORT PROVIDED BY OWNER.

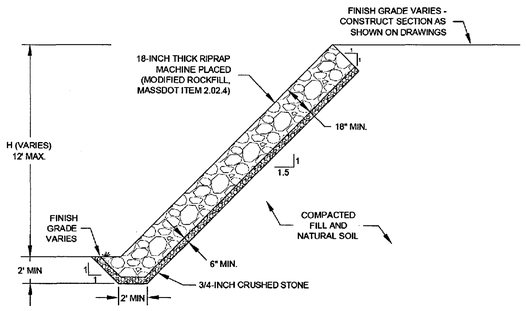

SLOPE STABILIZATION DETAIL
1.5H:1V SLOPE WITH RIPRAP (TYP)
NOT TO SCALE

REINFORCED SLOPES STEEPER THAN 2H:1V (9)
NOT TO SCALE

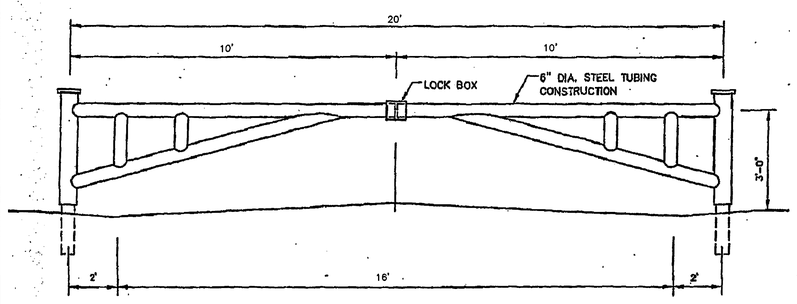

EMERGENCY FIRE ACCESS GATE (10)
NOT TO SCALE

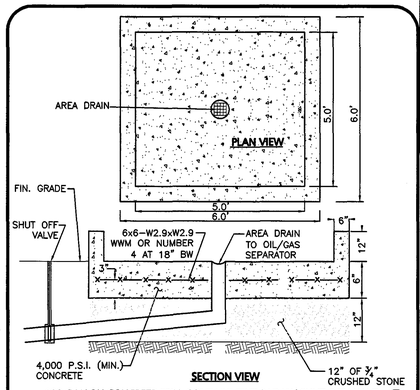

190 GALLON CONCRETE SPILL CONTAINMENT PAD W/ SHUT OFF VALVE (11)
NOT TO SCALE

PIPE MATERIAL NOTES:

1. NO-HUB CAST IRON WITH PRODUCT-APPROVED STAINLESS STEEL CLAMPS.
2. SERVICE WEIGHT CAST IRON WITH PRODUCT-APPROVED RESILIENT GASKETS OR LEAD AND OAKUM JOINTS.
3. EXTRA HEAVY CAST IRON WITH PRODUCT-APPROVED RESILIENT GASKETS OR LEAD AND OAKUM JOINTS.

MWRA INSPECTION NOTES:

1. AT LEAST 10 DAYS PRIOR TO INSTALLATION CONTRACTOR SHALL SUBMIT A "NOTIFICATION OF PROPOSED GAS/OIL SEPARATOR INSTALLATION" TO THE MWRA PER THE MASSACHUSETTS UNIFORM PLUMBING CODE AND THE MWRA'S SEWER USE REGULATIONS. FOR ADDITIONAL INFORMATION OR TO REQUEST AN INSPECTION PLEASE CONTACT THOMAS J. COFFEY, JR. (MWRA SOURCE COORDINATOR) @ (617)-305-5624.
2. PLUMBING SHALL BE INSTALLED, BUT STRUCTURE SHALL NOT BE BACKFILLED PRIOR TO MWRA INSPECTION.
3. MORTAR THE JOINTS (NO RUBBER BOOTS ALLOWED – HYDRAULIC CEMENT ONLY).
4. THE STRUCTURES SEAM MUST BE COMPLETELY VISIBLE AROUND THE ENTIRE STRUCTURE FOR INSPECTION. ADDITIONALLY THE AREA ONE FOOT BELOW THE OUTLET PIPE MUST ALSO BE VISIBLE. FOR INSPECTION.
5. OUTLET LINE SHALL BE PLUGGED (ON THE OUTSIDE) WHERE IT CAN BE REMOVED ONCE IT IS CONFIRMED THAT THE STRUCTURE HAS NO LEAKS.
6. THE CONTRACTOR SHALL FILL THE STRUCTURE WITH WATER AND CONFIRM THAT THE THERE ARE NO LEAKS PRIOR TO SCHEDULING THE MWRA INSPECTION. THE CONTRACTOR SHOULD NOTE THAT THE MWRA INSPECTOR WILL BE SPECIFICALLY LOOKING AT THE OUTLET PIPE "45 DEGREE ANGLE" AND UNDERSTANDS THAT IT IS PARTICULARLY DIFFICULT TO SEAL. SO THE CONTRACTOR SHOULD BE CAREFUL WHEN MORTARING THE JOINT. NOTE THE INSPECTOR WILL WANT TO INSPECT THE CONNECTION WITH THE TANK 1' BELOW THAT JOINT.
7. ONCE ON SITE, THE INSPECTOR WILL FIRST INSPECT THE STRUCTURE COMPLETELY FULL TO INSURE IT HAS NO LEAKS. THE INSPECTOR WILL THEN REQUIRE THAT THE OUTLET PIPE PLUG BE REMOVED TO OBSERVE THE WATER LEVEL. THE WATER LEVEL MUST BE OBSERVED AT LEAST 4" BELOW THE INLET PIPE.
8. THE CONTRACTOR MUST HAVE A 2" PUMP ON-SITE DURING THE INSPECTION TO ALLOW THE INSPECTOR TO VERIFY THE INTERIOR MEASUREMENT OF THE TANK FOR CODE COMPLIANCE.
9. THE OUTLET PIPE MUST NOT STICK INTO THE STRUCTURE CHAMBER ANY MORE THAN ILLUSTRATED.

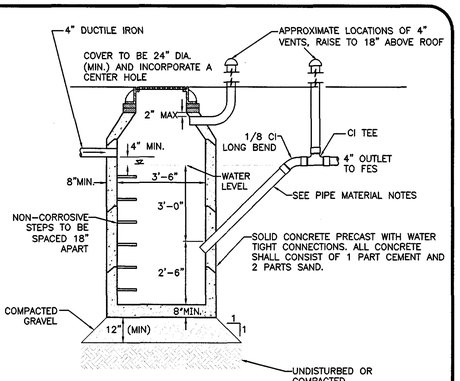

GENERAL CONSTRUCTION NOTES:

1. SEPARATOR TO BE LOCATED OUTSIDE WHERE POSSIBLE, WHEN LOCATED OUTSIDE, MANHOLE SHALL HAVE A CENTER HOLE.
2. SEPARATOR SHALL BE LOCATED AND CONSTRUCTED TO PREVENT SURFACE OR SUB-SURFACE WATER FROM ENTERING.
3. OUTLET TO BE BELOW FROST LINE.
4. SEPARATOR MUST BE FILLED WITH CLEAN WATER AND LEAK TESTED BEFORE BEING INTRODUCED INTO SERVICE.
5. OIL AND GAS TO BE REMOVED BEFORE CLEANING AND SHALL NOT BE DISCHARGED TO THE SEWER THROUGH ANY FIXTURES.
6. INLET SHALL BE SET A MINIMUM OF THREE FEET BELOW GRADE

GAS/OIL SEPARATOR (12)
NOT TO SCALE

WAIVERS OF TOWN OF BOXBOROUGH ZONING BYLAWS:
4.4003(1) USE REGULATION SCHEDULE
WAIVER TO PERMIT SINGLE-FAMILY AND MULTI-FAMILY ATTACHED RESIDENTIAL USES NOT OTHERWISE PERMITTED IN THE INDUSTRIAL COMMERCIAL DISTRICT (I.E., THE PROPOSED TWO (2) SINGLE FAMILY DWELLINGS AND THE PROPOSED 244 APARTMENT UNITS IN ELEVEN (11) MULTI-FAMILY BUILDINGS, FOR A TOTAL OF 246 UNITS)
4.4033 USE REGULATION SCHEDULE
WAIVER TO PERMIT A USE WHICH IS NOT OTHERWISE ACCESSORY TO INDUSTRIAL-COMMERCIAL USES, I.E., A CLUBHOUSE/RENTAL OFFICE.
5.5002 DIMENSIONAL SCHEDULE
WAIVER OF REQUIREMENT FOR A MAXIMUM FLOOR AREA RATIO OF 0.10.
6.6004 SURFACE, CIRCULATION, AND LANDSCAPING REQUIREMENTS
WAIVER OF REQUIREMENT THAT AUTOMOBILE PARKING SPACES SHALL NOT BE LESS THAN 10 FEET BY 20 FEET, IN ORDER TO ALLOW PARKING SPACE OF 9 FEET BY 18 FEET.
6.6103 MULTIPLE BUILDINGS ON ONE LOT
WAIVER OF REQUIREMENT THAT WHERE MORE THAN ONE BUILDING IS PROPOSED TO BE BUILT UPON A LOT, THE PLAN SHALL BE REVIEWED BY THE PLANNING BOARD REGARDING ADEQUACY OF ACCESS TO BUILDINGS, IN ORDER TO SUBSTITUTE THE PERMISSION FROM THE ZONING BOARD OF APPEALS GRANTED UNDER THIS COMPREHENSIVE PERMIT.
6.6105 PRIVATE/COMMON DRIVEWAYS IN THE BUSINESS, BUSINESS 1, OFFICE PARK, TOWN CENTER, AND INDUSTRIAL-COMMERCIAL DISTRICTS
WAIVER OF THE REQUIREMENT THAT PRIVATE/COMMON DRIVEWAYS ARE ALLOWED IN THE IC DISTRICT ONLY BY SPECIAL PERMIT OF THE PLANNING BOARD, IN ORDER TO SUBSTITUTE THE PERMISSION FROM THE ZONING BOARD OF APPEALS UNDER THIS COMPREHENSIVE PERMIT.
7.7004(6) SPECIAL REGULATIONS AQUIFER PROTECTION DISTRICT
WAIVER OF REQUIREMENT THAT THERE BE NO DISPOSAL OF SANITARY WASTE TO A SUBSURFACE DISPOSAL SYSTEM IN QUANTITIES EXCEEDING 440 GALLONS PER DAY PER ACRE OF AQUIFER PROTECTION DISTRICT CONTAINED WITHIN THE LOT, IN ORDER TO ALLOW QUANTITIES OF UP TO 750 GALLONS PER DAY PER ACRE OF THE SITE IN THE AQUIFER PROTECTION DISTRICT IN THE EVENT RESERVE LEACHING FIELDS ARE USED.
7.7007(1) DESIGN REQUIREMENTS
WAIVER OF REQUIREMENT THAT WHERE A PORTION OF THE SITE IS LOCATED OUTSIDE OF THE AQUIFER PROTECTION DISTRICT, POTENTIAL POLLUTION SOURCES, SUCH AS ON SITE DISPOSAL SYSTEMS, SHOULD BE LOCATED OUTSIDE THE DISTRICT BOUNDARIES, IN ORDER TO ALLOW RESERVE LEACHING FIELD TO BE LOCATED WITHIN THE AQUIFER PROTECTION DISTRICT.
7.7104(6) AND (9) W-DISTRICT USE REGULATIONS
WAIVER OF REQUIREMENTS FOR SPECIAL PERMIT FOR USE IN THE W-DISTRICT, IN ORDER TO SUBSTITUTE APPROVAL UNDER THIS COMPREHENSIVE PERMIT.
7.7106 SUBMITTALS
WAIVER OF REQUIREMENTS FOR SPECIAL PERMIT APPLICATIONS TO BE PREPARED AND SUBMITTED TO THE BOARD OF APPEALS, IN ORDER TO PERMIT ONE COMPREHENSIVE SUBMISSION TO THE BOARD TO BE ACTED ON UNDER G.L. C. 40B, §21.
7.7109 PROCEDURES
WAIVER OF REQUIREMENT FOR SPECIAL PERMIT APPLICATIONS TO BE PREPARED AND SUBMITTED TO THE BOARD OF APPEALS IN ORDER TO PERMIT A SINGLE COMPREHENSIVE PERMIT SUBMISSION TO THE BOARD TO BE ACTED UPON UNDER G.L. C.40B, §21.
7.7200 LANDS BORDERING THE W-DISTRICT
WAIVER OF REQUIREMENT FOR SPECIAL PERMIT TO PLACE STRUCTURES WITHIN ONE HUNDRED (100') FEET OF THE W-DISTRICT, IN ORDER TO PERMIT CONSTRUCTION OF WARD ROAD AND A FIRE POND WITHIN 100' OF W-DISTRICT.
8.8000 SITE PLAN APPROVAL & DESIGN REVIEW
WAIVER OF REQUIREMENT FOR SITE PLAN REVIEW BY THE PLANNING BOARD, FOR THE CONSTRUCTION OF MULTI-FAMILY STRUCTURES AND PARKING AREAS ASSOCIATED WITH MULTI-FAMILY STRUCTURES.
9.9012(2) BUILDING PERMITS
WAIVER OF REQUIREMENT THAT NO BUILDING PERMIT SHALL BE ISSUED BY THE INSPECTOR OF BUILDINGS WITHOUT THE WRITTEN APPROVAL OF A SITE PLAN BY THE PLANNING BOARD.

WAIVERS FROM TOWN OF BOXBOROUGH REGULATIONS FOR THE WETLAND BYLAW:
SECTION 2.5.3.1 PERFORMANCE STANDARDS
WAIVER OF PROHIBITION OF PARKING LOTS, PERMANENT STRUCTURES, AND SANITARY WASTE DISPOSAL SYSTEMS WITHIN ADJACENT LAND RESOURCE AREA, IN ORDER TO ALLOW THE PLACEMENT OF THE PROPOSED SANITARY WASTE DISPOSAL SYSTEM, PARKING LOT, ROAD AND OTHER PERMANENT STRUCTURES WITHIN THE ADJACENT LAND RESOURCE AREA IN ACCORDANCE WITH THE SITE PLAN APPROVED FOR THE PROJECT UNDER THIS COMPREHENSIVE PERMIT.

WAIVERS FROM BOXBOROUGH, COMPREHENSIVE PERMIT, RULES OF THE ZONING BOARD OF APPEALS:
SECTION 3.02(2) LIST OF REQUESTED EXCEPTIONS
WAIVER OF REQUIREMENT THAT APPLICANT PROVIDES A COMPLETE LIST OF ALL REQUESTED EXCEPTIONS AT THE TIME OF THE INITIAL FILING OF THE APPLICATION IN ORDER TO PERMIT THE LIST TO BE REVISED AS THE PROJECT EVOLVES THROUGH THE HEARING AND APPROVAL PROCESS.

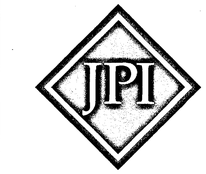

PROFESSIONAL ENGINEER FOR ALLEN & MAJOR ASSOCIATES, INC.

REV	DATE	DESCRIPTION
9.	07/08/2015	ISSUED FOR DEFINITIVE SITE PLAN
8.	06/12/2015	REVISED PER FIRE DEPARTMENT COMMENTS
7.	05/15/2015	ISSUED FOR PERMIT
6.	05/05/2015	ISSUED FOR DEP PERMIT APPROVAL
5.	05/04/2015	REVISED FOR PRICING
4.	03/26/2015	REVISED PER TOWN COMMENTS
3.	03/02/2015	ISSUED FOR MEPA
2.	02/27/2015	REVISED PER TOWN COMMENTS
1.	02/12/2015	ISSUED FOR ZONING BOARD OF APPEALS

APPLICANT:
JPI
3 WEST MAIN STREET, SUITE 203
IRVINGTON, NY 10533

PROJECT:
DEFINITIVE SITE PLAN SET
JEFFERSON AT BEAVER BROOK
BOXBOROUGH, MA

PROJECT NO.	2075-01	DATE:	02-11-2015
SCALE:	AS NOTED	DWG. NAME:	C2075-10
DESIGNED BY:	SJL	CHECKED BY:	CMQ

PREPARED BY:

ALLEN & MAJOR ASSOCIATES, INC.
civil & structural engineering • land surveying
environmental consulting • landscape architecture
www.allenmajor.com
100 COMMERCE WAY
P.O. BOX 2118
WOBURN MA 01888-0118
TEL: (781) 935-6889
FAX: (781) 935-2896
WOBURN, MA • LAKEVILLE, MA • MANCHESTER, NH

THIS DRAWING HAS BEEN PREPARED IN ELECTRONIC FORMAT. CLIENT/CLIENT'S REPRESENTATIVE OR CONSULTANT MAY BE PROVIDED COPIES OF DRAWINGS AND SPECIFICATIONS ON MAGNETIC MEDIA FOR HIS/HER INFORMATION AND USE FOR SPECIFIC APPLICATION TO THIS PROJECT. DUE TO THE POTENTIAL THAT THE MAGNETIC INFORMATION MAY BE MODIFIED UNINTENTIONALLY OR OTHERWISE, ALLEN & MAJOR ASSOCIATES, INC. MAY REMOVE ALL INDICATION OF THE DOCUMENT'S AUTHORSHIP ON THE MAGNETIC MEDIA. PRINTED REPRESENTATIONS OF THE DRAWINGS AND SPECIFICATIONS ISSUED SHALL BE THE ONLY RECORD COPIES OF ALLEN & MAJOR ASSOCIATES, INC.'S WORK PRODUCT.

DRAWING TITLE:	SHEET No.
DETAILS	D-2

Copyright©2015 Allen & Major Associates, Inc. All Rights Reserved

N:\PROJECTS\2075-01\CIVIL\DRAWINGS\CURRENT\2075-01 - DETAILS.DWG

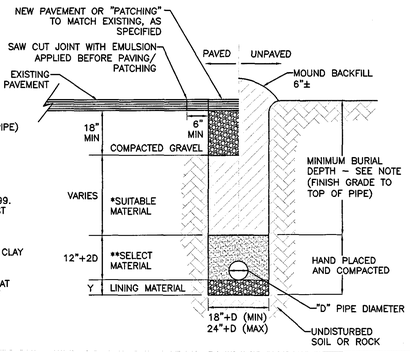

NOTES:

1. MINIMUM BURIAL DEPTH (FINISH GRADE TO TOP OF PIPE)
   GRAVITY PIPE – SEE PLAN OR PROFILE
   PRESSURE PIPE UNDER PAVING – 4'
   PRESSURE PIPE BENEATH UNPAVED – 3'
2. WHERE BACKFILL IS DESIGNATED AS COMPACTED, THIS MEANS 90 TO 95% STANDARD PROCTOR. AASHTO T–99. ALL FILL PLACED BELOW PIPES AND STRUCTURES MUST MEET THIS REQUIREMENT.
3. FOR ALL TRENCHES WITH A GRADE GREATER THAN 4% AND/OR WHERE GROUNDWATER IS APPARENT, INSTALL CLAY DAMS AROUND THE PIPE AT 100' INTERVALS.
4. IT IS RECOMMENDED THAT BEDROCK BE REMOVED TO AT LEAST 12 INCHES BELOW THE BOTTOM OF THE UTILITY CORRIDORS, AND THE UTILITIES BE BACKFILLED WITH BEDDING MATERIAL AS SPECIFIED HERE.
5. CONTRACTOR IS RESPONSIBLE TO REVIEW ALL GEOTECHNICAL RECOMMENDATIONS IN MOST CURRENT GEOTECHNICAL REPORT PROVIDED BY OWNER.

CONDITION & PIPE	**SELECT MATERIAL	LINING MATERIAL	Y–DIMENSION
DUCTILE IRON "ORDINARY SOIL"	TYPE I, II, OR III	SAND OR TYPE III	3"
RCP "ORDINARY SOIL"	TYPE II OR III	SAND OR TYPE III	3"
ALL PIPE OVER BEDROCK OR LEDGE	TYPE II OR III	SAND OR TYPE III	8"
DUCTILE IRON IN CLAY OR MUCK	TYPE II OR III	SAND	4"
RCP IN CLAY	TYPE II OR III	SAND	8"
ALL PLASTICS	TYPE III	SAND OR TYPE III	6"

* SUITABLE MATERIAL SHALL CONTAIN NO STONE GREATER THAN 4" IN DIAMETER, NO FROZEN LUMPS, AND ONLY MINOR AMOUNTS OF CLAY OR ORGANIC MATERIAL. ALL MATERIAL TO BE PLACED IN MAX 12" LIFTS AND COMPACTED BEFORE PLACING NEXT LIFT.

**TYPE I MATERIAL SHALL BE EITHER GRAVEL OR EXCAVATED MATERIAL CONTAINING NO STONES GREATER THAN 1.5" DIAMETER, NO FROZEN LUMPS, CLAY OR ORGANIC MATERIAL.

**TYPE II MATERIAL SHALL BE CLEAN, HARD, CRUSHED OR NATURAL STONE WITH A GRADATION BY WEIGHT OF 100% PASSING A 1.5" SQUARE OPENING, NOT MORE THAN 25% PASSING A ¾" OPENING, AND NOT MORE THAN 5% PASSING A ¼" SQUARE OPENING.

**TYPE III MATERIAL SHALL BE CLEAN, HARD, CRUSHED STONE FREE FROM COATINGS AND THOROUGHLY WASHED WITH A GRADATION BY WEIGHT OF 100% PASSING A 1" SQUARE OPENING, AND 0 TO 5% PASSING A ¼" SQUARE OPENING.

TRENCH DETAIL (1)
NOT TO SCALE

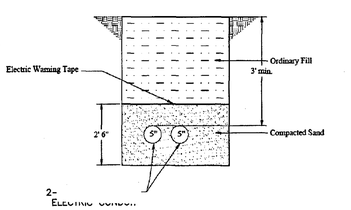

NOT
ELECTRICAL SERVICE CONDUIT UNDER A TRAVELED WAY SHALL BE SCHEDULE 80 PVC IN LIEU OF CONCRETE ENCASEMENT PER SECTION 5.D OF THE LELD NEW CONSTRUCTION GUIDELINES.

5" ELECTRICAL CONDUIT DETAIL (2)
NOT TO SCALE

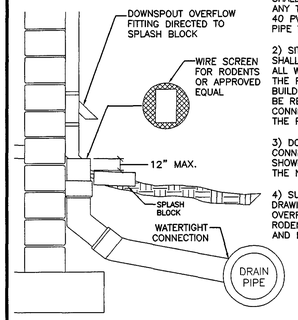

NOTES:

1) A WATERTIGHT CONNECTION SHALL BE MAINTAINED FROM ANY TRANSITION FROM SCH. 40 PVC PIPE TO ANY OTHER PIPE TYPE.

2) SITEWORK CONTRACTOR SHALL BE RESPONSIBLE FOR ALL WORK TO AND INCLUDING THE RODENT SCREEN. BUILDING CONTRACTOR SHALL BE RESPONSIBLE FOR THE CONNECTION AT THE POINT OF THE RODENT SCREEN.

3) DOWNSPOUTS SHALL BE CONNECTED IN THE MANNER SHOWN AND CONVEYED TO THE NEAREST STORM DRAIN.

4) SUBMIT SHOP DRAWINGS FOR DOWNSPOUT OVERFLOW, SPLASH BACK, RODENT SCREEN, FITTINGS AND PIPE.

TYPICAL ROOF DRAIN (RD) DOWNSPOUT COLLECTOR (3)
NOT TO SCALE

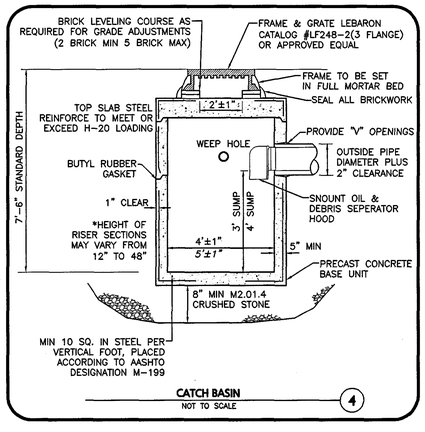

CATCH BASIN (4)
NOT TO SCALE

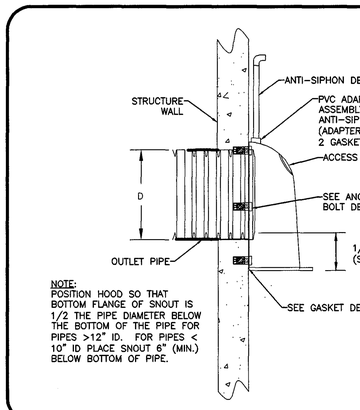

NOTE:
POSITION HOOD SO THAT BOTTOM FLANGE OF SNOUT IS 1/2 THE PIPE DIAMETER BELOW THE BOTTOM OF THE PIPE FOR PIPES >12" ID. FOR PIPES < 10" ID PLACE SNOUT 6" (MIN.) BELOW BOTTOM OF PIPE.

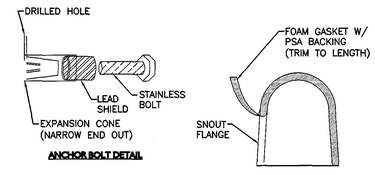

SNOUT OIL & DEBRIS STOP (5)
NOT TO SCALE

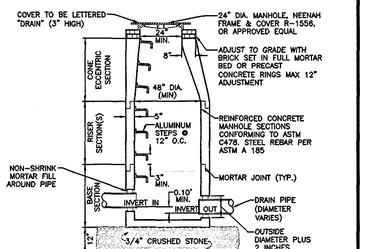

NOTE:
1. THE MANHOLE, INCLUDING ALL COMPONENT PARTS, SHALL HAVE ADEQUATE SPACE AND STRENGTH QUALITIES CONSIDERED NECESSARY FOR THE INTENDED SERVICE. SPACE REQUIREMENT AND CONFIGURATIONS SHALL BE AS SHOWN ON THE DRAWING. THE COMPLETE STRUCTURE SHALL BE OF SUCH MATERIAL AND QUALITY AS TO WITHSTAND (H–20 LOADING) WITHOUT FAILURE. VERTICAL FOOT OF MANHOLE.
2. ALL PIPE CONNECTIONS TO MANHOLES REQUIRE RUBBER BOOTS.

PRECAST DRAIN MANHOLE (6)
NOT TO SCALE

RIPRAP SIZING CHART			
OUTLET	La	W	D50
FES#1	13.9'	10.1'	0.50
FES#2	14.4'	9.5'	0.50
FES#3	5.7'	7.7'	0.50
HW#1	23.4'	13.9'	0.50

RIP RAP SHALL EXTEND FROM THE FES TO THE BOTTOM OF THE PROPOSED WETLAND AREA OR FURTHER AS SHOWN ON THE GRADING & DRAINAGE PLAN.

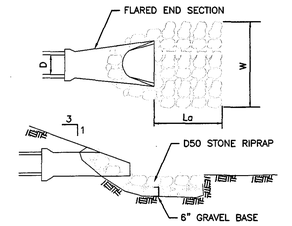

FLARED END SECTION WITH RIP RAP (7)
NOT TO SCALE

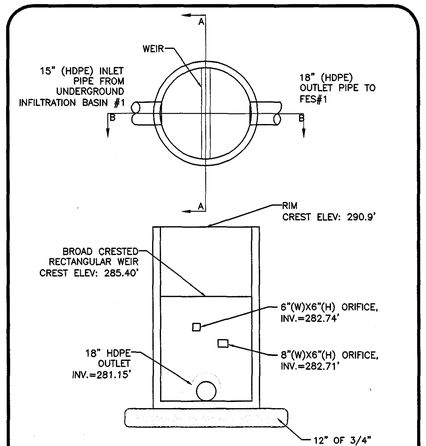

NOTES:

1. CONCRETE: 4,000 PSI MINIMUM AFTER 28 DAYS.
2. ALL REINFORCEMENT PER ASTM C1227–93.
3. TONGUE & GROOVE JOINT SEALED WITH BUTYLE RESIN OR MASTIC.
4. WALLS ARE TO BE 6" THICK & BOTTOM TO BE 8" THICK.
5. PROVIDE 4' SUMP

OUTLET CONTROL STRUCTURE #1 (8)
NOT TO SCALE

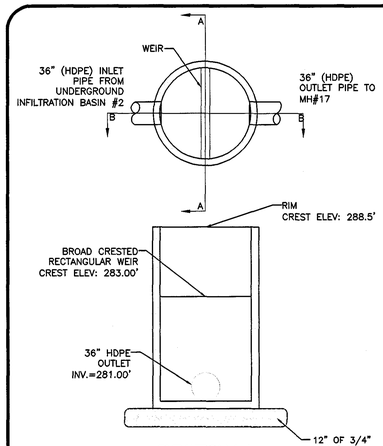

NOTES:

1. CONCRETE: 4,000 PSI MINIMUM AFTER 28 DAYS.
2. ALL REINFORCEMENT PER ASTM C1227–93.
3. TONGUE & GROOVE JOINT SEALED WITH BUTYLE RESIN OR MASTIC.
4. WALLS ARE TO BE 6" THICK & BOTTOM TO BE 8" THICK.
5. PROVIDE 4' SUMP

OUTLET CONTROL STRUCTURE #2 (9)
NOT TO SCALE

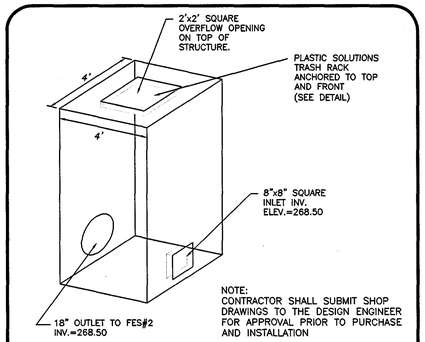

NOTE:
CONTRACTOR SHALL SUBMIT SHOP DRAWINGS TO THE DESIGN ENGINEER FOR APPROVAL PRIOR TO PURCHASE AND INSTALLATION

OUTLET CONTROL STRUCTURE #3 (10)
NOT TO SCALE

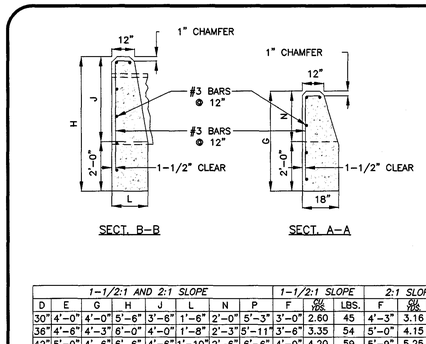

1–1/2:1 AND 2:1 SLOPE								1–1/2:1 SLOPE			2:1 SLOPE		
D	E	G	H	J	L	N	P	F	CU YDS	LBS.	F	CU YDS	LBS.
30"	4'–0"	4'–0"	5'–6"	3'–6"	1'–6"	2'–0"	5'–3"	3'–0"	2.60	45	4'–3"	3.16	54
36"	4'–6"	4'–3"	6'–0"	4'–0"	1'–8"	2'–3"	5'–11"	3'–6"	3.35	54	5'–0"	4.15	64
42"	5'–0"	4'–6"	6'–6"	4'–6"	1'–10"	2'–6"	6'–6"	4'–0"	4.20	59	5'–9"	5.25	70
48"	5'–6"	4'–9"	7'–0"	5'–0"	2'–0"	2'–9"	7'–2"	4'–6"	5.19	65	6'–6"	6.50	83

NOTE: ALL CONCRETE DIMENSIONS SHOWN ARE MINIMUM.

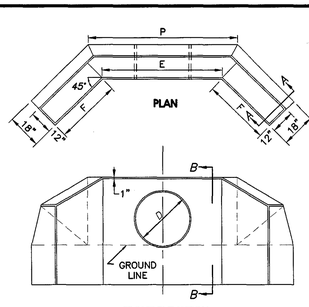

CONCRETE HEADWALL (11)
NOT TO SCALE

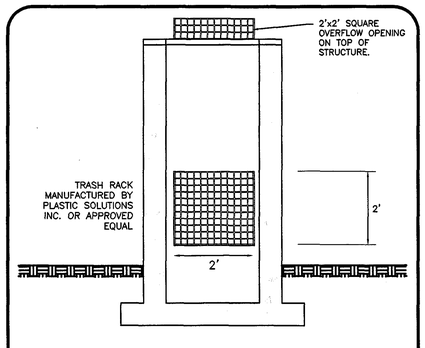

FLAT ROOF TRASH RACK FOR OCS #3 (12)
NOT TO SCALE

NOTES:
1. HINGE MECHANISM TO BE PROVIDED.
2. TRASH RACK SHALL BE HOT–DIP GALVANIZED AFTER FABRICATION.
3. ALL MATERIALS TO BE NON–CORROSIVE.
4. SMALL CONCRETE PAD TO BE INSTALLED UNDERNEATH ORIFICE.

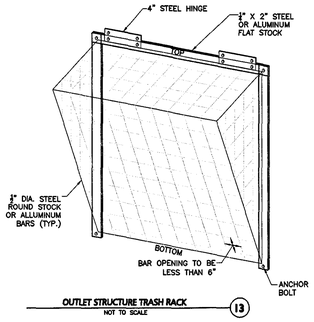

OUTLET STRUCTURE TRASH RACK (13)
NOT TO SCALE

JPI

WAIVERS OF TOWN OF BOXBOROUGH ZONING BYLAWS:
4.4003(1) USE REGULATION SCHEDULE
WAIVER TO PERMIT SINGLE-FAMILY AND MULTI-FAMILY ATTACHED RESIDENTIAL USES, NOT OTHERWISE PERMITTED IN THE INDUSTRIAL/COMMERCIAL DISTRICT (I/C) TO THE PROPOSED TWO (2) SINGLE-FAMILY DWELLINGS AND THE PROPOSED 244 APARTMENT UNITS IN ELEVEN (11) MULTI-FAMILY BUILDINGS, FOR A TOTAL OF 246 UNITS)
4.4033 USE REGULATION SCHEDULE
WAIVER TO PERMIT A USE WHICH IS NOT OTHERWISE ACCESSORY TO INDUSTRIAL-COMMERCIAL USES, I.E., A CLUBHOUSE/RENTAL OFFICE.
5.5002 DIMENSIONAL SCHEDULE
WAIVER OF REQUIREMENT FOR A MAXIMUM FLOOR AREA RATIO OF 0.10.
8.6004 SURFACE, CIRCULATION, AND LANDSCAPING REQUIREMENTS
WAIVER OF REQUIREMENT THAT AUTOMOBILE PARKING SPACES SHALL NOT BE LESS THAN 10 FEET BY 20 FEET, IN ORDER TO ALLOW PARKING SPACE OF 9 FEET BY 18 FEET.
8.6103 MULTIPLE BUILDINGS ON ONE LOT
WAIVER OF REQUIREMENT THAT WHERE MORE THAN ONE BUILDING IS PROPOSED TO BE BUILT UPON A LOT, THE PLAN SHALL BE REVIEWED BY THE PLANNING BOARD REGARDING ADEQUACY OF ACCESS TO BUILDINGS, IN ORDER TO SUBSTITUTE THE PERMISSION FROM THE ZONING BOARD OF APPEALS GRANTED UNDER THIS COMPREHENSIVE PERMIT.
8.6105 PRIVATE/COMMON DRIVEWAYS IN THE BUSINESS, BUSINESS 1, OFFICE PARK, TOWN CENTER, AND INDUSTRIAL–COMMERCIAL DISTRICTS
WAIVER OF THE REQUIREMENT THAT PRIVATE/COMMON DRIVEWAYS ARE ALLOWED IN THE I/C DISTRICT ONLY BY SPECIAL PERMIT OF THE PLANNING BOARD, IN ORDER TO SUBSTITUTE THE PERMISSION FROM THE ZONING BOARD OF APPEALS UNDER THIS COMPREHENSIVE PERMIT.
7.7004(G) SPECIAL REGULATIONS AQUIFER PROTECTION DISTRICT
WAIVER OF REQUIREMENT THAT THERE BE NO DISPOSAL OF SANITARY WASTE TO A SUBSURFACE DISPOSAL SYSTEM IN QUANTITIES EXCEEDING 440 GALLONS PER DAY PER ACRE OF AQUIFER PROTECTION DISTRICT CONTAINED WITHIN THE LOT, IN ORDER TO ALLOW QUANTITIES OF UP TO 750 GALLONS PER DAY PER ACRE OF THE SITE IN THE AQUIFER PROTECTION DISTRICT IN THE EVENT RESERVE LEACHING FIELDS ARE USED.
7.7007(E) DESIGN REQUIREMENTS
WAIVER OF REQUIREMENT THAT WHERE A PORTION OF THE SITE IS LOCATED OUTSIDE OF THE AQUIFER PROTECTION DISTRICT, POTENTIAL POLLUTION SOURCES, SUCH AS ON SITE DISPOSAL SYSTEMS, SHOULD BE LOCATED OUTSIDE THE DISTRICT BOUNDARIES, IN ORDER TO ALLOW RESERVE LEACHING FIELD TO BE LOCATED WITHIN THE AQUIFER PROTECTION DISTRICT.
7.7106(G) AND (H) W–DISTRICT USE REGULATIONS
WAIVER OF REQUIREMENTS FOR SPECIAL PERMIT FOR USE IN THE W–DISTRICT, IN ORDER TO SUBSTITUTE APPROVAL UNDER THIS COMPREHENSIVE PERMIT.
7.7106 SUBMITTALS
WAIVER OF REQUIREMENTS FOR SPECIAL PERMIT APPLICATIONS TO BE PREPARED AND SUBMITTED TO THE BOARD OF APPEALS, IN ORDER TO PERMIT ONE COMPREHENSIVE SUBMISSION TO THE BOARD TO BE ACTED ON UNDER G.L. C. 40B, §21.
7.7109 PROCEDURES
WAIVER OF REQUIREMENT FOR SPECIAL PERMIT APPLICATIONS TO BE PREPARED AND SUBMITTED TO THE BOARD OF APPEALS IN ORDER TO PERMIT A SINGLE COMPREHENSIVE PERMIT SUBMISSION TO THE BOARD TO BE ACTED UPON UNDER G.L. C.40B, §21.
7.7200 LANDS BORDERING THE W–DISTRICT
WAIVER OF REQUIREMENT FOR SPECIAL PERMIT TO PLACE STRUCTURES WITHIN ONE HUNDRED (100') FEET OF THE W–DISTRICT, IN ORDER TO PERMIT CONSTRUCTION OF WARD ROAD AND A FIRE POND WITHIN 100' OF W–DISTRICT.
8.8000 SITE PLAN APPROVAL & DESIGN REVIEW
WAIVER OF REQUIREMENT FOR SITE PLAN REVIEW BY THE PLANNING BOARD FOR CONSTRUCTION OF MULTI–FAMILY STRUCTURES AND PARKING AREAS ASSOCIATED WITH MULTI–FAMILY STRUCTURES.
9.9001(2) BUILDING PERMITS
WAIVER OF REQUIREMENT THAT NO BUILDING PERMIT SHALL BE ISSUED BY THE INSPECTOR OF BUILDINGS WITHOUT THE WRITTEN APPROVAL OF A SITE PLAN BY THE PLANNING BOARD.

WAIVERS FROM TOWN OF BOXBOROUGH REGULATIONS FOR THE WETLAND BYLAW:
SECTION 2.5.3.1 PERFORMANCE STANDARDS
WAIVER OF PROHIBITION OF PARKING LOTS, PERMANENT STRUCTURES, AND SANITARY WASTE DISPOSAL SYSTEMS WITHIN ADJACENT LAND RESOURCE AREA, IN ORDER TO ALLOW THE PLACEMENT OF THE PROPOSED SANITARY WASTE DISPOSAL SYSTEM, PARKING LOT, ROAD AND OTHER PERMANENT STRUCTURES WITHIN THE ADJACENT LAND RESOURCE AREA IN ACCORDANCE WITH THE SITE PLAN APPROVED FOR THE PROJECT UNDER THIS COMPREHENSIVE PERMIT.

WAIVERS FROM BOXBOROUGH COMPREHENSIVE PERMIT RULES OF THE PLANNING BOARD OF APPEALS:
SECTION 3.02(I) LIST OF REQUESTED EXCEPTIONS
WAIVER OF REQUIREMENT THAT APPLICANT PROVIDES A COMPLETE LIST OF ALL REQUESTED EXCEPTIONS AT THE TIME OF THE INITIAL FILING OF THE APPLICATION IN ORDER TO PERMIT THE LIST TO BE REVISED AS THE PROJECT EVOLVES THROUGH THE HEARING AND APPROVAL PROCESS.

COMMONWEALTH OF MASSACHUSETTS
TIMOTHY J. WILLIAMS
CIVIL
No. 43119
REGISTERED PROFESSIONAL ENGINEER
7/8/15

PROFESSIONAL ENGINEER FOR ALLEN & MAJOR ASSOCIATES, INC.

REV	DATE	DESCRIPTION
9.	07/08/2015	ISSUED FOR DEFINITIVE SITE PLAN
8.	06/12/2015	REVISED PER FIRE DEPARTMENT COMMENTS
7.	05/15/2015	ISSUED FOR PERMIT
6.	05/05/2015	ISSUED FOR DEP PERMIT APPROVAL
5.	05/04/2015	REVISED FOR PRICING
4.	03/26/2015	REVISED PER TOWN COMMENTS
3.	03/02/2015	ISSUED FOR MEPA
2.	02/27/2015	REVISED PER TOWN COMMENTS
1.	02/12/2015	ISSUED FOR ZONING BOARD OF APPEALS

APPLICANT:
JPI
3 WEST MAIN STREET, SUITE 203
IRVINGTON, NY 10533

PROJECT:
DEFINITIVE SITE PLAN SET
JEFFERSON AT BEAVER BROOK
BOXBOROUGH, MA

PROJECT NO.	2075-01	DATE:	02-11-2015
SCALE:	AS NOTED	DWG. NAME:	C2075-10
DESIGNED BY:	SJL	CHECKED BY:	CMQ

PREPARED BY:
ALLEN & MAJOR ASSOCIATES, INC.
civil & structural engineering ◆ land surveying
environmental consulting ◆ landscape architecture
www.allenmajor.com
100 COMMERCE WAY
P.O. BOX 2118
WOBURN MA 01888-0118
TEL: (781) 935-6889
FAX: (781) 935-2896
WOBURN, MA ◆ LAKEVILLE, MA ◆ MANCHESTER, NH

THIS DRAWING HAS BEEN PREPARED IN ELECTRONIC FORMAT. CLIENT/CLIENT'S REPRESENTATIVE OR CONSULTANT MAY BE PROVIDED COPIES OF DRAWINGS AND SPECIFICATIONS ON MAGNETIC MEDIA FOR HIS/HER INFORMATION AND USE FOR SPECIFIC APPLICATION TO THIS PROJECT. DUE TO THE POTENTIAL THAT THE MAGNETIC INFORMATION MAY BE MODIFIED UNINTENTIONALLY OR OTHERWISE, ALLEN & MAJOR ASSOCIATES, INC. MAY REMOVE ALL INDICATION OF THE DOCUMENT'S AUTHORSHIP ON THE MAGNETIC MEDIA. PRINTED REPRESENTATIONS OF THE DRAWINGS AND SPECIFICATIONS ISSUED SHALL BE THE ONLY RECORD COPIES OF ALLEN & MAJOR ASSOCIATES, INC.'S WORK PRODUCT.

DRAWING TITLE: DETAILS
SHEET No. D-3

Copyright©2015 Allen & Major Associates, Inc. All Rights Reserved

N:\PROJECTS\2075-01\CIVIL\DRAWINGS\CURRENT\2075-01 – DETAILS.DWG

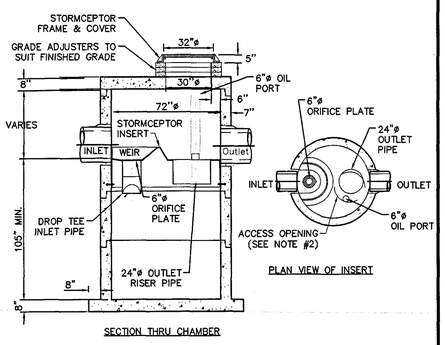

PLAN VIEW OF INSERT

SECTION THRU CHAMBER

NOTE :
1. THE USE OF FLEXIBLE CONNECTIONS IS RECOMMENDED AT THE INLET AND OUTLET WHERE APPLICABLE.
2. THE COVER SHOULD BE POSITIONED OVER THE OUTLET DROP PIPE AND THE OIL PORT.
3. THE STORMCEPTOR SYSTEM IS PROTECTED BY ONE OR MORE OF THE FOLLOWING U.S. PATENTS: #5753115, #5849181, #6068765, #6371690, #7582216, #7666303.
4. CONTACT A CONCRETE PIPE DIVISION REPRESENTATIVE FOR FURTHER DETAILS NOT LISTED ON THIS DRAWING.

STC 1800 PRECAST CONCRETE STORMCEPTOR (1)
(1800 US GALLON CAPACITY)
NOT TO SCALE

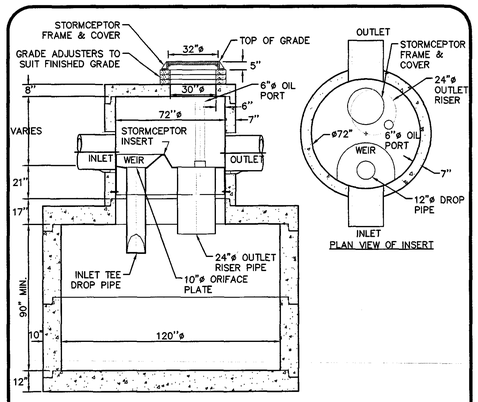

PLAN VIEW OF INSERT

SECTION THRU CHAMBER

NOTE :
1. THE USE OF FLEXIBLE CONNECTIONS IS RECOMMENDED AT THE INLET AND OUTLET WHERE APPLICABLE.
2. THE COVER SHOULD BE POSITIONED OVER THE 24"ø OUTLET RISER PIPE AND THE 6"ø OIL PORT.
3. THE STORMCEPTOR SYSTEM IS PROTECTED BY ONE OR MORE OF THE FOLLOWING U.S. PATENTS: #4985148, #5498331, #5725760, #5753115, #5849181.
4. CONTACT A CONCRETE PIPE DIVISION REPRESENTATIVE FOR FURTHER DETAILS NOT LISTED ON THIS DRAWING.

STC 4800 PRECAST CONCRETE STORMCEPTOR (2)
(4800 US GALLON CAPACITY)
NOT TO SCALE

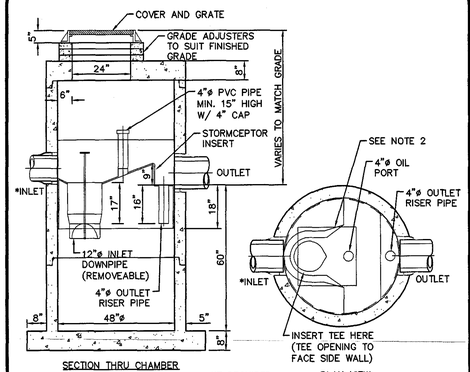

SECTION THRU CHAMBER

*IF REQUIRED

PLAN VIEW

NOTE :
1. THE USE OF FLEXIBLE CONNECTIONS IS RECOMMENDED AT THE INLET AND OUTLET WHERE APPLICABLE.
2. THE COVER SHOULD BE POSITIONED OVER THE 24"ø OUTLET RISER PIPE AND THE 6"ø OIL PORT.
3. THE STORMCEPTOR SYSTEM IS PROTECTED BY ONE OR MORE OF THE FOLLOWING U.S. PATENTS: #4985148, #5498331, #5725760, #5753115, #5849181.
4. CONTACT A CONCRETE PIPE DIVISION REPRESENTATIVE FOR FURTHER DETAILS NOT LISTED ON THIS DRAWING.

STC 450I PRECAST CONCRETE STORMCEPTOR (10)
(450 US GALLON CAPACITY)
NOT TO SCALE

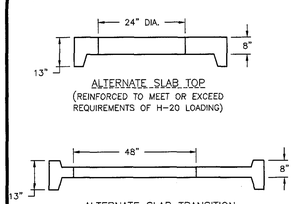

ALTERNATE SLAB TOP
(REINFORCED TO MEET OR EXCEED REQUIREMENTS OF H-20 LOADING)

ALTERNATE SLAB TRANSITION
(REINFORCED TO MEET OR EXCEED REQUIREMENTS OF H-20 LOADING)

NOTES:
1. MANUFACTURED TO MEET OR EXCEED ASTM C-478 & AASHTO M 199 SPECS.
2. REINFORCING STEEL SHALL CONFORM TO LATEST ASTM A185 SPECIFICATIONS.
3. CONCRETE SHALL BE 4,000 PSI MINIMUM WITH CEMENT PER ASTM C-478 (6.1).
4. STEEL REINFORCING SHALL MEET OR EXCEED H20 LOADING.
5. MANHOLE STEPS SHALL BE POLYPROPYLENE COATED GRADE 60 REINFORCING BAR, PER ASTM C-478 & O.S.H.A. (STD 1-1.9).
6. BUTYL RUBBER JOINT SEALANT SHALL BE PER ASTM C-990 & AASHTO M-198.
7. BASE SECTION SHALL BE ONE POUR MONOLITHIC.

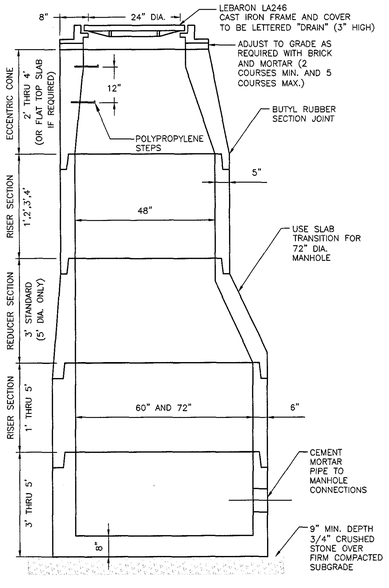

60" AND 72" DIAMETER PRECAST CONCRETE DRAIN MANHOLE (DMH) FOR PIPE DIAMETERS 24" AND GREATER (4)
(OR APPROVED EQUAL)

WAIVERS OF TOWN OF BOXBOROUGH ZONING BYLAWS:
4.4003(1) USE REGULATION SCHEDULE
WAIVER TO PERMIT SINGLE-FAMILY AND MULTI-FAMILY ATTACHED RESIDENTIAL USES NOT OTHERWISE PERMITTED IN THE INDUSTRIAL COMMERCIAL DISTRICT (I.E., THE PROPOSED TWO (2) SINGLE FAMILY DWELLINGS AND THE PROPOSED 244 APARTMENT UNITS IN ELEVEN (11) MULTI-FAMILY BUILDINGS, FOR A TOTAL OF 246 UNITS)
4.4033 USE REGULATION SCHEDULE
WAIVER TO PERMIT A USE WHICH IS NOT OTHERWISE ACCESSORY TO INDUSTRIAL-COMMERCIAL USES, I.E., A CLUBHOUSE/RENTAL OFFICE.
5.5002 DIMENSIONAL SCHEDULE
WAIVER OF REQUIREMENT FOR A MAXIMUM FLOOR AREA RATIO OF 0.10.
6.6004 SURFACE, CIRCULATION, AND LANDSCAPING REQUIREMENTS
WAIVER OF REQUIREMENT THAT AUTOMOBILE PARKING SPACES SHALL NOT BE LESS THAN 10 FEET BY 20 FEET, IN ORDER TO ALLOW PARKING SPACE OF 9 FEET BY 18 FEET.
6.6103 MULTIPLE BUILDINGS ON ONE LOT
WAIVER OF REQUIREMENT THAT WHERE MORE THAN ONE BUILDING IS PROPOSED TO BE BUILT UPON A LOT, THE PLAN SHALL BE REVIEWED BY THE PLANNING BOARD REGARDING ADEQUACY OF ACCESS TO BUILDINGS, IN ORDER TO SUBSTITUTE THE PERMISSION FROM THE ZONING BOARD OF APPEALS GRANTED UNDER THIS COMPREHENSIVE PERMIT.
6.6105 PRIVATE/COMMON DRIVEWAYS IN THE BUSINESS, BUSINESS 1, OFFICE PARK, TOWN CENTER, AND INDUSTRIAL-COMMERCIAL DISTRICTS
WAIVER OF THE REQUIREMENT THAT PRIVATE/COMMON DRIVEWAYS ARE ALLOWED IN THE IC DISTRICT ONLY BY SPECIAL PERMIT OF THE PLANNING BOARD, IN ORDER TO SUBSTITUTE THE PERMISSION FROM THE ZONING BOARD OF APPEALS UNDER THIS COMPREHENSIVE PERMIT.
7.7004(6) SPECIAL REGULATIONS AQUIFER PROTECTION DISTRICT
WAIVER OF REQUIREMENT THAT THERE BE NO DISPOSAL OF SANITARY WASTE TO A SUBSURFACE DISPOSAL SYSTEM IN QUANTITIES EXCEEDING 440 GALLONS PER DAY PER ACRE OF AQUIFER PROTECTION DISTRICT CONTAINED WITHIN THE LOT, IN ORDER TO ALLOW QUANTITIES OF UP TO 750 GALLONS PER DAY PER ACRE OF THE SITE IN THE AQUIFER PROTECTION DISTRICT IN THE EVENT RESERVE LEACHING FIELDS ARE USED.
7.7007(1) DESIGN REQUIREMENTS
WAIVER OF REQUIREMENT THAT WHERE A PORTION OF THE SITE IS LOCATED OUTSIDE OF THE AQUIFER PROTECTION DISTRICT, POTENTIAL POLLUTION SOURCES, SUCH AS ON SITE DISPOSAL SYSTEMS, SHOULD BE LOCATED OUTSIDE THE DISTRICT BOUNDARIES, IN ORDER TO ALLOW RESERVE LEACHING FIELD TO BE LOCATED WITHIN THE AQUIFER PROTECTION DISTRICT.
7.7104(G) AND (H) W-DISTRICT USE REGULATIONS
WAIVER OF REQUIREMENTS FOR SPECIAL PERMIT FOR USE IN THE W-DISTRICT, IN ORDER TO SUBSTITUTE APPROVAL UNDER THIS COMPREHENSIVE PERMIT.
7.7106 SUBMITTALS
WAIVER OF REQUIREMENTS FOR SPECIAL PERMIT APPLICATIONS TO BE PREPARED AND SUBMITTED TO THE BOARD OF APPEALS, IN ORDER TO PERMIT ONE COMPREHENSIVE SUBMISSION TO THE BOARD TO BE ACTED ON UNDER G.L. C. 40B, §21.
7.7100 PROCEDURES
WAIVER OF REQUIREMENT FOR SPECIAL PERMIT APPLICATIONS TO BE PREPARED AND SUBMITTED TO THE BOARD OF APPEALS IN ORDER TO PERMIT A SINGLE COMPREHENSIVE PERMIT SUBMISSION TO THE BOARD TO BE ACTED UPON UNDER G.L. C.40B, §21.
7.7220 LANDS BORDERING THE W-DISTRICT
WAIVER OF REQUIREMENT FOR SPECIAL PERMIT TO PLACE STRUCTURES WITHIN ONE HUNDRED (100') FEET OF THE W-DISTRICT, IN ORDER TO PERMIT CONSTRUCTION OF WARD ROAD AND A FIRE POND WITHIN 100' OF W-DISTRICT.
8.8000 SITE PLAN APPROVAL & DESIGN REVIEW
WAIVER OF REQUIREMENT FOR SITE PLAN REVIEW BY THE PLANNING BOARD FOR THE CONSTRUCTION OF MULTI-FAMILY STRUCTURES AND PARKING AREAS ASSOCIATED WITH MULTI-FAMILY STRUCTURES.
9.9001(2) BUILDING PERMITS
WAIVER OF REQUIREMENT THAT NO BUILDING PERMIT SHALL BE ISSUED BY THE INSPECTOR OF BUILDINGS WITHOUT THE WRITTEN APPROVAL OF A SITE PLAN BY THE PLANNING BOARD.

WAIVERS FROM TOWN OF BOXBOROUGH REGULATIONS FOR THE WETLAND BYLAW:
SECTION 2.5.3.1 PERFORMANCE STANDARDS
WAIVER OF PROHIBITION OF PARKING LOTS, PERMANENT STRUCTURES, AND SANITARY WASTE DISPOSAL SYSTEMS WITHIN ADJACENT LAND RESOURCE AREAS, IN ORDER TO ALLOW THE CONSTRUCTION OF THE PROPOSED SANITARY WASTE DISPOSAL SYSTEMS, PARKING LOT, ROAD AND PROPOSED PERMANENT STRUCTURES WITHIN THE ADJACENT LAND RESOURCE AREAS, IN ACCORDANCE WITH THE SITE PLAN APPROVED FOR THE PROJECT UNDER THIS COMPREHENSIVE PERMIT.

WAIVERS FROM BOXBOROUGH COMPREHENSIVE PERMIT RULES OF THE BOARD OF APPEALS:
SECTION 3.02(I) LIST OF REQUESTED EXCEPTIONS
WAIVER OF REQUIREMENT THAT APPLICANT PROVIDE A COMPLETE LIST OF ALL REQUESTED EXCEPTIONS AT THE TIME OF THE INITIAL FILING OF THE APPLICATION, IN ORDER TO PERMIT THE LIST TO BE REVISED AS THE PROJECT EVOLVES THROUGH THE HEARING AND APPROVAL PROCESS.

PROFESSIONAL ENGINEER FOR
ALLEN & MAJOR ASSOCIATES, INC.

REV	DATE	DESCRIPTION
9.	07/08/2015	ISSUED FOR DEFINITIVE SITE PLAN
8.	06/12/2015	REVISED PER FIRE DEPARTMENT COMMENTS
7.	05/15/2015	ISSUED FOR PERMIT
6.	05/05/2015	ISSUED FOR DEP PERMIT APPROVAL
5.	05/04/2015	REVISED FOR PRICING
4.	03/26/2015	REVISED PER TOWN COMMENTS
3.	03/02/2015	ISSUED FOR MEPA
2.	02/27/2015	REVISED PER TOWN COMMENTS
1.	02/12/2015	ISSUED FOR ZONING BOARD OF APPEALS

APPLICANT:
JPI
3 WEST MAIN STREET, SUITE 203
IRVINGTON, NY 10533

PROJECT:
DEFINITIVE SITE PLAN SET
JEFFERSON AT BEAVER BROOK
BOXBOROUGH, MA

PROJECT NO.	2075-01	DATE:	02-11-2015
SCALE:	AS NOTED	DWG. NAME:	C2075-10
DESIGNED BY:	SJL	CHECKED BY:	CMQ

PREPARED BY:
ALLEN & MAJOR ASSOCIATES, INC.
civil & structural engineering ◆ land surveying
environmental consulting ◆ landscape architecture
www.allenmajor.com
100 COMMERCE WAY
P.O. BOX 9118
WOBURN MA 01888-0118
TEL: (781) 935-6889
FAX: (781) 935-2896
WOBURN, MA ◆ LAKEVILLE, MA ◆ MANCHESTER, NH

THIS DRAWING HAS BEEN PREPARED IN ELECTRONIC FORMAT. CLIENT/CLIENT'S REPRESENTATIVE OR CONSULTANT MAY BE PROVIDED COPIES OF DRAWINGS AND SPECIFICATIONS ON MAGNETIC MEDIA FOR HIS/HER INFORMATION AND USE FOR SPECIFIC APPLICATION TO THIS PROJECT. DUE TO THE POTENTIAL THAT THE MAGNETIC INFORMATION MAY BE MODIFIED UNINTENTIONALLY OR OTHERWISE, ALLEN & MAJOR ASSOCIATES, INC. MAY REMOVE ALL INDICATION OF THE DOCUMENT'S AUTHORSHIP ON THE MAGNETIC MEDIA. PRINTED REPRESENTATIONS OF THE DRAWINGS AND SPECIFICATIONS ISSUED SHALL BE THE ONLY RECORD COPIES OF ALLEN & MAJOR ASSOCIATES, INC.'S WORK PRODUCT.

DRAWING TITLE: DETAILS

SHEET No. D-4

Copyright©2015 Allen & Major Associates, Inc. All Rights Reserved

N:\PROJECTS\2075-01\CIVIL\DRAWINGS\CURRENT\2075-01 - DETAILS.DWG

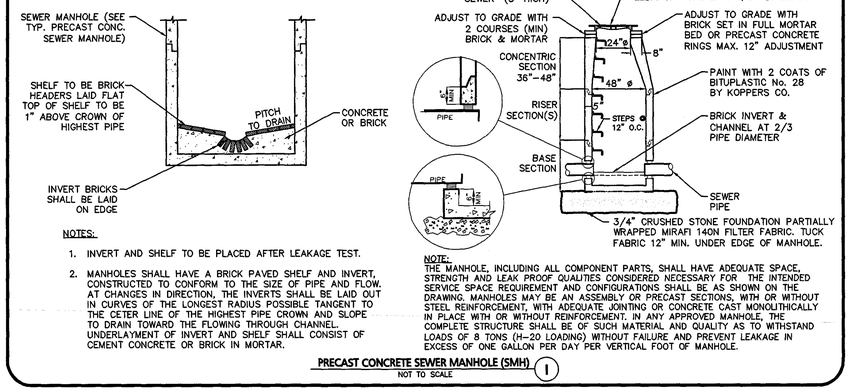

NOTES:

1. INVERT AND SHELF TO BE PLACED AFTER LEAKAGE TEST.
2. MANHOLES SHALL HAVE A BRICK PAVED SHELF AND INVERT, CONSTRUCTED TO CONFORM TO THE SIZE OF PIPE AND FLOW. AT CHANGES IN DIRECTION, THE INVERTS SHALL BE LAID OUT IN CURVES OF THE LONGEST RADIUS POSSIBLE TANGENT TO THE CETER LINE OF THE HIGHEST PIPE GROWN AND SLOPE TO DRAIN TOWARD THE FLOWING THROUGH CHANNEL. UNDERLAYMENT OF INVERT AND SHELF SHALL CONSIST OF CEMENT CONCRETE OR BRICK IN MORTAR.

NOTE:
THE MANHOLE, INCLUDING ALL COMPONENT PARTS, SHALL HAVE ADEQUATE SPACE, STRENGTH AND LEAK PROOF QUALITIES CONSIDERED NECESSARY FOR THE INTENDED SERVICE. SPACE REQUIREMENT AND CONFIGURATIONS SHALL BE AS SHOWN ON THE DRAWING. MANHOLES MAY BE AN ASSEMBLY OR PRECAST SECTIONS, WITH OR WITHOUT STEEL REINFORCEMENT, WITH ADEQUATE JOINTING OR CONCRETE CAST MONOLITHICALLY IN PLACE WITH OR WITHOUT REINFORCEMENT. IN ANY APPROVED MANHOLE, THE COMPLETE STRUCTURE SHALL BE OF SUCH MATERIAL AND QUALITY AS TO WITHSTAND LOADS OF 8 TONS (H-20 LOADING) WITHOUT FAILURE AND PREVENT LEAKAGE IN EXCESS OF ONE GALLON PER DAY PER VERTICAL FOOT OF MANHOLE.

PRECAST CONCRETE SEWER MANHOLE (SMH) (1)
NOT TO SCALE

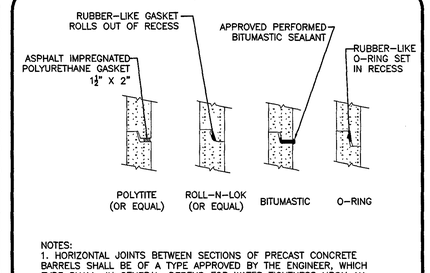

NOTES:
1. HORIZONTAL JOINTS BETWEEN SECTIONS OF PRECAST CONCRETE BARRELS SHALL BE OF A TYPE APPROVED BY THE ENGINEER, WHICH TYPE SHALL, IN GENERAL, DEPEND FOR WATER TIGHTNESS UPON AN ELASTOMERIC OR MASTIC-LIKE GASKET.
2. ALL GASKETS AND SEALANTS SHALL BE INSTALLED IN ACCORDANCE WITH MANUFACTURER'S WRITTEN INSTRUCTIONS.
3. FOR BITUMASTIC TYPE JOINTS THE AMOUNT OF SEALANT SHALL BE SUFFICIENT TO FILL AT LEAST 75% OF THE JOINT CAVITY.

SEWER MANHOLE JOINTING METHODS (2)
NOT TO SCALE

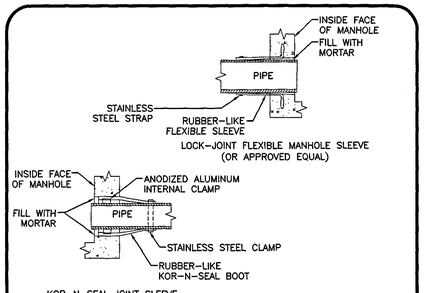

NOTES:
1. PIPE TO MANHOLE JOINTS SHALL BE ONLY AS APPROVED BY THE ENGINEER AND IN GENERAL, WILL DEPEND FOR WATER TIGHTNESS UPON ELASTOMETRIC SEALANT
2. NON-SHRINKING MORTAR SHALL ONLY BE USED WHERE SPECIFICALLY APPROVED BY THE ENGINEER.

PIPE CONNECTIONS TO SEWER MANHOLE (3)
NOT TO SCALE

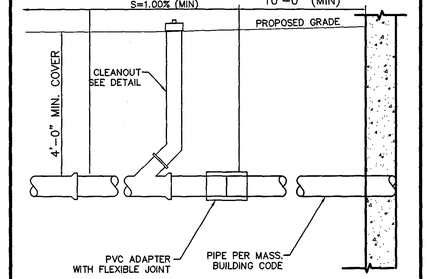

BUILDING SEWER SERVICE (4)
NOT TO SCALE

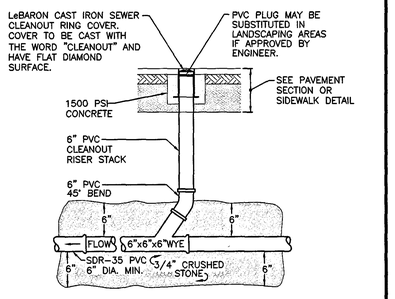

SEWER CLEAN OUT DETAIL (5)
NOT TO SCALE

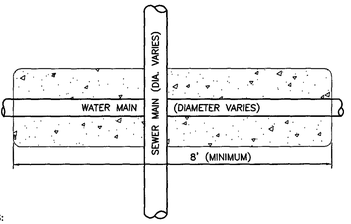

NOTES:

WHENEVER CONDITIONS PREVENT A LATERAL SEPARATION OF 10 FEET BETWEEN A SEWER MAIN AND A WATER MAIN:

1. THE WATER MAIN SHALL BE LAID IN A SEPARATE TRENCH AND THE DIFFERENCE IN ELEVATION BETWEEN THE WATER MAIN AND THE SEWER MAIN SHALL BE AT LEAST 18 INCHES.
2. THE PIPE CROSSING SHALL OCCUR AS CLOSE TO 90° AS PRACTICABLE.
3. THE PIPE JOINTS SHALL BE STAGGERED TO PROVIDE THE MAXIMUM SEPARATION FROM THE POINT OF CROSSING.
4. THE CROSSING SHALL BE ENCASED IN CONCRETE FOR THE ENTIRE WIDTH OF THE TRENCH AND FOR A DISTANCE OF 8 LINEAR FEET CENTERED ON THE CROSSING.

SEWER / WATER CROSSING DETAIL (6)
NOT TO SCALE

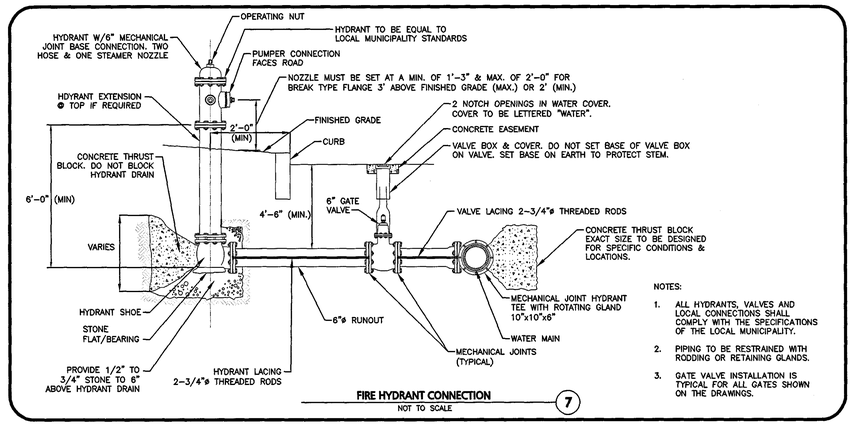

NOTES:

1. ALL HYDRANTS, VALVES AND LOOP CONNECTIONS SHALL COMPLY WITH THE SPECIFICATIONS OF THE LOCAL MUNICIPALITY.
2. PIPING TO BE RESTRAINED WITH RODDING OR RETAINING GLANDS.
3. GATE VALVE INSTALLATION IS TYPICAL FOR ALL GATES SHOWN ON THE DRAWINGS.

FIRE HYDRANT CONNECTION (7)
NOT TO SCALE

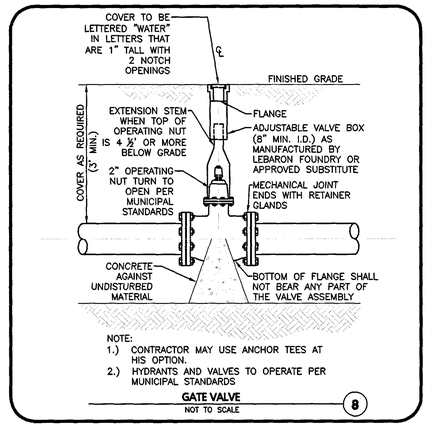

NOTE:
1.) CONTRACTOR MAY USE ANCHOR TEES AT HIS OPTION.
2.) HYDRANTS AND VALVES TO OPERATE PER MUNICIPAL STANDARDS

GATE VALVE (8)
NOT TO SCALE

NOTES:
1. ALL WATER MAIN FITTINGS, BENDS, TEES, PLUGS ETC. SHALL BE RESTRAINED W/ THRUST BLOCKS EXCEPT WHERE NOTED.
2. ALL THRUST BLOCKS & COLLARS SHALL BE INSTALLED SO THAT THEY BEAR AGAINST UNDISTURBED EARTH.
3. SIZE OF CONCRETE THRUST BLOCKS SHALL BE AS NOTED BELOW.
4. MINIMUM COMPRESSIVE STRENGTH OF THRUST BLOCK CONCRETE SHALL BE 3,000 P.S.I.
5. KEEP CONCRETE CLEAR OF MECHANICAL JOINTS.
6. THE BELOW PREDICATED ON A WATER PRESSURE OF 225 PSI AND A SOIL RESISTANCE OF 2000 PSF (TILL). FOR OTHER SOILS THE VALUES IN THE ABOVE TABLE SHALL BE MULTIPLIED BY:

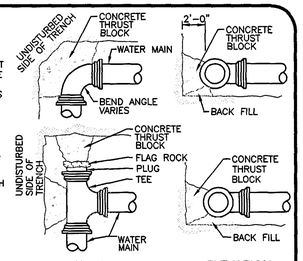

PLAN **ELEVATION**

MINIMUM THRUST BLOCK BEARING AREAS				
PIPE ø	90° BEND (SQ. FT.)	45° BEND (SQ. FT.)	22.5° BEND (SQ. FT.)	TEES, PLUGS, CAPS & HYD. (SQ.FT.)
6"	5	3	3	4
8"	9	6	3	9
10"	13	7	4	12
12"	20	10	5	16

THRUST BLOCK DETAILS (9)
NOT TO SCALE

WAIVERS OF TOWN OF BOXBOROUGH ZONING BYLAWS:
4.4003(1) USE REGULATION SCHEDULE
WAIVER TO PERMIT SINGLE-FAMILY AND MULTI-FAMILY ATTACHED RESIDENTIAL USES NOT OTHERWISE PERMITTED IN THE INDUSTRIAL COMMERCIAL DISTRICT (I.E. THE PROPOSED TWO (2) SINGLE FAMILY DWELLINGS AND THE PROPOSED 244 APARTMENT UNITS IN ELEVEN (11) MULTI-FAMILY BUILDINGS, FOR A TOTAL OF 246 UNITS)
4.4033 USE REGULATION SCHEDULE
WAIVER TO PERMIT A USE WHICH IS NOT OTHERWISE ACCESSORY TO INDUSTRIAL-COMMERCIAL USES, I.E., A CLUBHOUSE/RENTAL OFFICE.
5.5002 DIMENSIONAL SCHEDULE
WAIVER OF REQUIREMENT FOR A MAXIMUM FLOOR AREA RATIO OF 0.10.
6.6004 SURFACE, CIRCULATION, AND LANDSCAPING REQUIREMENTS
WAIVER OF REQUIREMENT THAT AUTOMOBILE PARKING SPACES SHALL NOT BE LESS THAN 10 FEET BY 20 FEET, IN ORDER TO ALLOW PARKING SPACE OF 9 FEET BY 18 FEET.
6.6103 MULTIPLE BUILDINGS ON ONE LOT
WAIVER OF REQUIREMENT THAT WHERE MORE THAN ONE BUILDING IS PROPOSED TO BE BUILT UPON A LOT, THE PLAN SHALL BE REVIEWED BY THE PLANNING BOARD REGARDING ADEQUACY OF ACCESS TO BUILDINGS, IN ORDER TO SUBSTITUTE THE PERMISSION FROM THE ZONING BOARD OF APPEALS GRANTED UNDER THIS COMPREHENSIVE PERMIT.
6.6105 PRIVATE/COMMON DRIVEWAYS IN THE BUSINESS, BUSINESS 1, OFFICE PARK, TOWN CENTER, AND INDUSTRIAL-COMMERCIAL DISTRICTS
WAIVER OF THE REQUIREMENT THAT PRIVATE/COMMON DRIVEWAYS ARE ALLOWED IN THE IC DISTRICT ONLY BY SPECIAL PERMIT OF THE PLANNING BOARD, IN ORDER TO SUBSTITUTE THE PERMISSION FROM THE ZONING BOARD OF APPEALS UNDER THIS COMPREHENSIVE PERMIT.
7.7004(G) SPECIAL REGULATIONS AQUIFER PROTECTION DISTRICT
WAIVER OF REQUIREMENT THAT THE DISPOSAL OF SANITARY WASTE TO A SUBSURFACE DISPOSAL SYSTEM IN QUANTITIES EXCEEDING 440 GALLONS PER DAY PER ACRE OF AQUIFER PROTECTION DISTRICT CONTAINED WITHIN THE LOT, IN ORDER TO ALLOW QUANTITIES OF UP TO 750 GALLONS PER DAY PER ACRE OF THE SITE IN THE AQUIFER PROTECTION DISTRICT IN THE EVENT RESERVE LEACHING FIELDS ARE USED.
7.7007(1) DESIGN REQUIREMENTS
WAIVER OF REQUIREMENT THAT WHERE A PORTION OF THE SITE IS LOCATED OUTSIDE OF THE AQUIFER PROTECTION DISTRICT, POTENTIAL POLLUTION SOURCES, SUCH AS ON SITE DISPOSAL SYSTEMS, SHOULD BE LOCATED OUTSIDE THE DISTRICT BOUNDARIES, IN ORDER TO ALLOW RESERVE LEACHING FIELD TO BE LOCATED WITHIN THE AQUIFER PROTECTION DISTRICT.
7.7104(G) AND (H) W-DISTRICT USE REGULATIONS
WAIVER OF REQUIREMENTS FOR SPECIAL PERMIT FOR USE IN THE W-DISTRICT, IN ORDER TO SUBSTITUTE APPROVAL UNDER THIS COMPREHENSIVE PERMIT.
7.7109 SUBMITTALS
WAIVER OF REQUIREMENTS FOR SPECIAL PERMIT APPLICATIONS TO BE PREPARED AND SUBMITTED TO THE BOARD OF APPEALS, IN ORDER TO PERMIT ONE COMPREHENSIVE SUBMISSION TO THE BOARD TO BE ACTED ON UNDER G.L. C. 40B, §21.
7.7109 PROCEDURES
WAIVER OF REQUIREMENT FOR SPECIAL PERMIT APPLICATIONS TO BE PREPARED AND SUBMITTED TO THE BOARD OF APPEALS IN ORDER TO PERMIT A SINGLE COMPREHENSIVE PERMIT SUBMISSION TO THE BOARD TO BE ACTED UPON UNDER G.L. C.40B, §21.
7.7300 LANDS BORDERING THE W-DISTRICT
WAIVER OF REQUIREMENT FOR SPECIAL PERMIT TO PLACE STRUCTURES WITHIN ONE HUNDRED (100') FEET OF THE W-DISTRICT, IN ORDER TO PERMIT CONSTRUCTION OF WARD ROAD AND A FIRE POND WITHIN 100' OF W-DISTRICT.
8.8000 SITE PLAN APPROVAL & DESIGN REVIEW
WAIVER OF REQUIREMENT FOR SITE PLAN REVIEW BY THE PLANNING BOARD FOR THE CONSTRUCTION OF MULTI-FAMILY STRUCTURES AND PARKING AREAS ASSOCIATED WITH MULTI-FAMILY STRUCTURES.
9.9001(2) BUILDING PERMITS
WAIVER OF REQUIREMENT THAT NO BUILDING PERMIT SHALL BE ISSUED BY THE INSPECTOR OF BUILDINGS WITHOUT THE WRITTEN APPROVAL OF A SITE PLAN BY THE PLANNING BOARD.

WAIVERS FROM TOWN OF BOXBOROUGH REGULATIONS FOR THE WETLAND BYLAW:
SECTION 2.5.3.1 PERFORMANCE STANDARDS
WAIVER OF PROHIBITION OF PARKING LOTS, PERMANENT STRUCTURES, AND SANITARY WASTE DISPOSAL SYSTEMS WITHIN ADJACENT LAND RESOURCE AREA, IN ORDER TO ALLOW THE PLACEMENT OF PERMANENT SANITARY WASTE DISPOSAL SYSTEM, PARKING LOT, AND ASSOCIATED PERMANENT STRUCTURES WITHIN THE ADJACENT LAND RESOURCE AREA IN ACCORDANCE WITH THE SITE PLAN APPROVED FOR THE PROJECT UNDER THIS COMPREHENSIVE PERMIT.

WAIVERS FROM BOXBOROUGH COMPREHENSIVE PERMIT RULES OF THE HOUSING BOARD OF APPEALS:
SECTION 3.02(1) LIST OF REQUESTED EXCEPTIONS
WAIVER OF REQUIREMENT THAT APPLICANT PROVIDES A COMPLETE LIST OF ALL REQUESTED EXCEPTIONS AT THE TIME OF THE INITIAL FILING OF THE APPLICATION IN ORDER TO PERMIT THIS LIST TO BE REVISED AS THE PROJECT EVOLVES THROUGH THE HEARING AND APPROVAL PROCESS.

TIMOTHY J. WILLIAMS CIVIL No.43119 REGISTERED PROFESSIONAL ENGINEER
COMMONWEALTH OF MASSACHUSETTS
7/8/15
PROFESSIONAL ENGINEER FOR ALLEN & MAJOR ASSOCIATES, INC.

REV	DATE	DESCRIPTION
9.	07/08/2015	ISSUED FOR DEFINITIVE SITE PLAN
8.	06/12/2015	REVISED PER FIRE DEPARTMENT COMMENTS
7.	05/15/2015	ISSUED FOR PERMIT
6.	05/05/2015	ISSUED FOR DEP PERMIT APPROVAL
5.	05/04/2015	REVISED FOR PRICING
4.	03/26/2015	REVISED PER TOWN COMMENTS
3.	03/02/2015	ISSUED FOR MEPA
2.	02/27/2015	REVISED PER TOWN COMMENTS
1.	02/12/2015	ISSUED FOR ZONING BOARD OF APPEALS

APPLICANT:
JPI
3 WEST MAIN STREET, SUITE 203
IRVINGTON, NY 10533

PROJECT:
DEFINITIVE SITE PLAN SET
JEFFERSON AT BEAVER BROOK
BOXBOROUGH, MA

PROJECT NO.	2075-01	DATE:	02-11-2015
SCALE:	AS NOTED	DWG. NAME:	C2075-10
DESIGNED BY:	SJL	CHECKED BY:	CMQ

PREPARED BY:
ALLEN & MAJOR ASSOCIATES, INC.
civil & structural engineering ◆ land surveying
environmental consulting ◆ landscape architecture
www.allenmajor.com
100 COMMERCE WAY
P.O. BOX 2118
WOBURN MA 01888-0118
TEL: (781) 935-6889
FAX: (781) 935-2896
WOBURN, MA ◆ LAKEVILLE, MA ◆ MANCHESTER, NH

THIS DRAWING HAS BEEN PREPARED IN ELECTRONIC FORMAT. CLIENT/CLIENT'S REPRESENTATIVE OR CONSULTANT MAY BE PROVIDED COPIES OF DRAWINGS AND SPECIFICATIONS ON MAGNETIC MEDIA FOR HIS/HER INFORMATION AND USE FOR SPECIFIC APPLICATION TO THIS PROJECT. DUE TO THE POTENTIAL THAT THE MAGNETIC INFORMATION MAY BE MODIFIED UNINTENTIONALLY OR OTHERWISE, ALLEN & MAJOR ASSOCIATES, INC. MAY REMOVE ALL INDICATION OF THE DOCUMENT'S AUTHORSHIP ON THE MAGNETIC MEDIA. PRINTED REPRESENTATIONS OF THE DRAWINGS AND SPECIFICATIONS ISSUED SHALL BE THE ONLY RECORD COPIES OF ALLEN & MAJOR ASSOCIATES, INC.'S WORK PRODUCT.

DRAWING TITLE: DETAILS

SHEET No. D-5

Copyright©2015 Allen & Major Associates, Inc. All Rights Reserved

N:\PROJECTS\2075-01\CIVIL\DRAWINGS\CURRENT\2075-01 - DETAILS.DWG

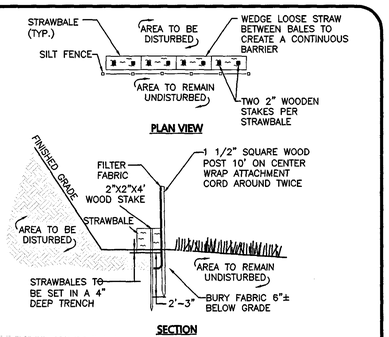

NOTE:
DEPTH TO BE 2' UNLESS POST IS TO BE SET IN PEAT THEN 3' OR DEPTH POSSIBLE BY PUSHING BY HAND SHALL BE REQUIRED.

SILT FENCE AND STRAWBALE DETAIL (1)
NOT TO SCALE

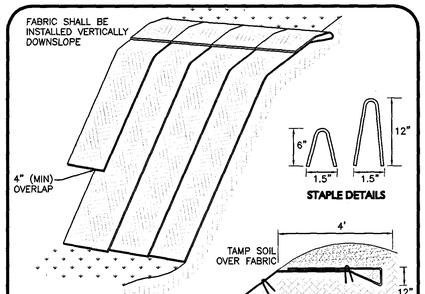

NOTE:
1. SLOPE SURFACE SHALL BE FREE OF ROCKS, CLODS, STICKS AND GRASS.
2. APPLY PERMANENT SEEDING BEFORE PLACING FABRIC.
3. LAY BLANKETS LOOSELY AND STAKE OR STAPLE TO MAINTAIN DIRECT CONTACT WITH THE SOIL. DO NOT STRETCH.
4. CHOOSE MATERIAL BASED ON SLOPE, SOILS, AND APPLICATION.

EROSION CONTROL FABRIC (2)
N.T.S.

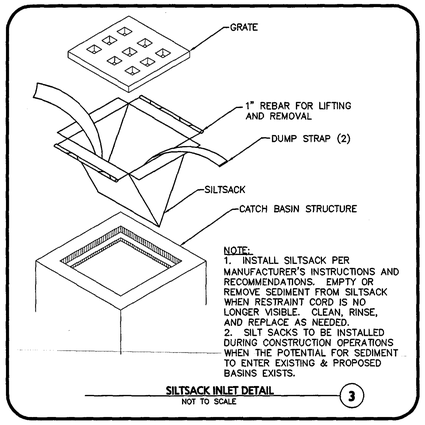

NOTE:
1. INSTALL SILTSACK PER MANUFACTURER'S INSTRUCTIONS AND RECOMMENDATIONS. EMPTY OR REMOVE SEDIMENT FROM SILTSACK WHEN RESTRAINT CORD IS NO LONGER VISIBLE. CLEAN, RINSE, AND REPLACE AS NEEDED.
2. SILT SACKS TO BE INSTALLED DURING CONSTRUCTION OPERATIONS WHEN THE POTENTIAL FOR SEDIMENT TO ENTER EXISTING & PROPOSED BASINS EXISTS.

SILTSACK INLET DETAIL (3)
NOT TO SCALE

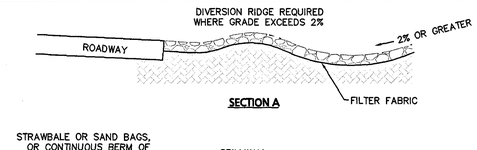

NOTES:
1. THE ENTRANCE SHALL BE MAINTAINED IN A CONDITION THAT WILL PREVENT TRACKING OR FLOWING OF SEDIMENT ONTO PUBLIC RIGHT-OF-WAYS. THIS MAY REQUIRE TOP DRESSING, REPAIR AND/OR CLEANOUT OF ANY MEASURES USED TO TRAP SEDIMENT.
2. WHEN NECESSARY, WHEELS SHALL BE CLEANED PRIOR TO ENTERING THE PUBLIC RIGHT-OF-WAY.
3. WHEN WASHING IS REQUIRED, IT SHALL BE DONE ON AN AREA STABILIZED WITH CRUSHED STONE THAT DRAINS INTO AN APPROVED SEDIMENT TRAP OR SEDIMENT BASIN.
4. USE SANDBAGS,STRAWBALES, OR OTHER APPROVED METHODS TO CHANNELIZE RUNOFF TO BASIN AS REQUIRED.

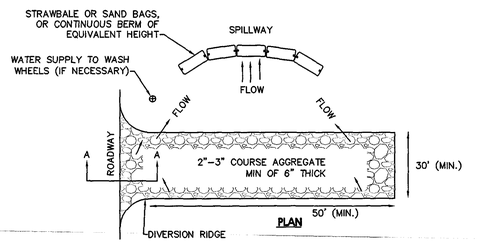

TEMPORARY CONSTRUCTION ENTRANCE/EXIT (4)
NOT TO SCALE

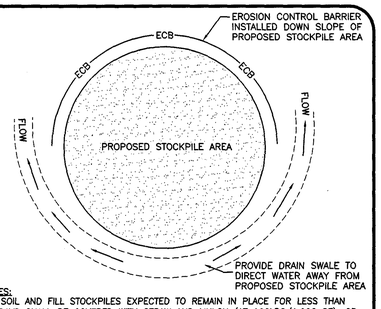

NOTES:
1. SOIL AND FILL STOCKPILES EXPECTED TO REMAIN IN PLACE FOR LESS THAN 90 DAYS SHALL BE COVERED WITH STRAW AND MULCH (AT 100LBS/1,000 SF), OR WITH AN ANCHORED TARP WITHIN 7 DAYS OR PRIOR TO ANY RAINFALL.
2. SOIL AND FILL STOCKPILES EXPECTED TO REMAIN IN PLACE FOR 90 DAYS OR MORE SHALL BE SEEDED WITH WINTER RYE (FOR FALL SEEDING AT 1LB/1,000 SF) OR OATS (FOR SUMMER SEEDING AT 2LB/1,000 SF) AND THEN COVERED WITH HAY MULCH (AT 100LB/1,000 SF) OR AN ANCHORED TARP WITHIN 7 DAYS OR PRIOR TO ANY RAINFALL.

STOCKPILE PROTECTION (5)
NOT TO SCALE

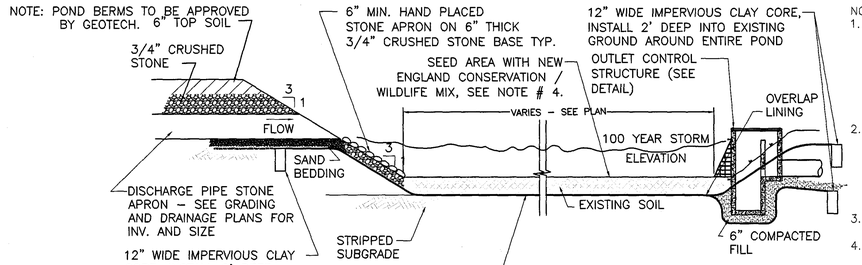

TYPICAL DETENTION POND DETAIL
NOT TO SCALE

NOTE:
1. CLAY CORE TO BE CONSTRUCTED OF IMPERVIOUS SOIL BORROW AND TO BE COMPACTED TO 90% OF MAXIMUM DRY DENSITY WITH 6" OF TOPSOIL. BERM TO BE SEEDED. IMPERVIOUS CLAY CORE TO BE FREE OF PEAT STUMPS, BRUSH, ORGANIC SOILS AND OTHER DELETERIOUS MATERIALS. CORE MATERIAL TO HAVE PERMEABILITY OF 1 x10^-4 CM/SEC
2. IMPERMEABLE LINER TO ENCOMPASS THE BOTTOM AND SIDES OF THE SEDIMENTATION FOREBAY. LINER TO BE 20-MIL PVC WITH LAP JOINTS AND SEALED IN THE FIELD. A SAND CUSHION SHOULD BE APPLIED IF NEEDED TO FORM THE BASIN. INSTALL LINER PER MANUFACTURERS RECOMMENDATIONS.
3. FINAL DESIGN TO BE BASED ON GEOTECHNICAL REPORT.
4. "NEW ENGLAND CONSERVATION WILDLIFE MIX" SEED WILL BE DISPERSED ON THE SLOPES AND BOTTOM OF THE DETENTION AREA AT A RATIO OF 1 POUND PER 1,000 SQUARE FEET AS AVAILABLE FROM NEW ENGLAND WETLAND PLANTS, INC. 820 WEST ST., AMHERST, MA, 413-548-8000. SEE LANDSCAPE PLAN FOR SEED MIX.

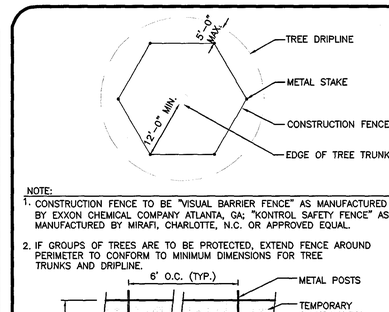

NOTE:
1. CONSTRUCTION FENCE TO BE "VISUAL BARRIER FENCE" AS MANUFACTURED BY EXXON CHEMICAL COMPANY ATLANTA, GA; "KONTROL SAFETY FENCE" AS MANUFACTURED BY MIRAFI, CHARLOTTE, N.C. OR APPROVED EQUAL.
2. IF GROUPS OF TREES ARE TO BE PROTECTED, EXTEND FENCE AROUND PERIMETER TO CONFORM TO MINIMUM DIMENSIONS FOR TREE TRUNKS AND DRIPLINE.

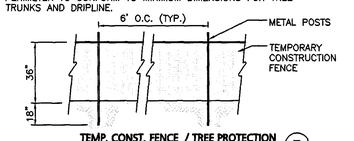

TEMP. CONST. FENCE / TREE PROTECTION (7)
NOT TO SCALE

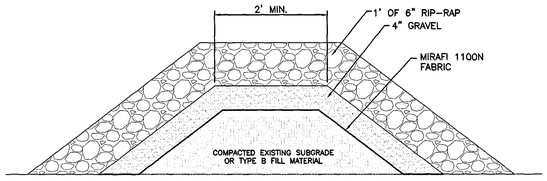

SECTION VIEW

NOTE:
1. REFER TO PLAN SHEETS, C-4A TO C-4C FOR CHECK DAM HEIGHT, DISTANCE FROM FLARED END SECTION.
2. TOP OF CHECK DAM ELEVATION CORRESPONDS TO THE TOP OF GRAVEL ELEVATION OF THE CHECK DAM, NOT THE TOP OF RIP RAP ELEVATION.

SEDIMENT FOREBAY CHECK DAM DETAIL
NOT TO SCALE

JPI

WAIVERS OF TOWN OF BOXBOROUGH ZONING BYLAWS:
4.4003(1) USE REGULATION SCHEDULE
WAIVER TO PERMIT SINGLE-FAMILY AND MULTI-FAMILY ATTACHED RESIDENTIAL USES NOT OTHERWISE PERMITTED IN THE INDUSTRIAL COMMERCIAL DISTRICT (I.E., THE PROPOSED TWO (2) SINGLE FAMILY DWELLINGS AND THE PROPOSED 244 APARTMENT UNITS IN ELEVEN (11) MULTI-FAMILY BUILDINGS, FOR A TOTAL OF 246 UNITS)
4.4033 USE REGULATION SCHEDULE
WAIVER TO PERMIT A USE WHICH IS NOT OTHERWISE ACCESSORY TO INDUSTRIAL-COMMERCIAL USES, I.E., A CLUBHOUSE/RENTAL OFFICE.
5.5002 DIMENSIONAL SCHEDULE
WAIVER OF REQUIREMENT FOR A MAXIMUM FLOOR AREA RATIO OF 0.10.
6.6004 SURFACE, CIRCULATION, AND LANDSCAPING REQUIREMENTS
WAIVER OF REQUIREMENT THAT AUTOMOBILE PARKING SPACES SHALL NOT BE LESS THAN 10 FEET BY 20 FEET, IN ORDER TO ALLOW PARKING SPACE OF 9 FEET BY 18 FEET.
6.6103 MULTIPLE BUILDINGS ON ONE LOT
WAIVER OF REQUIREMENT THAT WHERE MORE THAN ONE BUILDING IS PROPOSED TO BE BUILT UPON A LOT, THE PLAN SHALL BE REVIEWED BY THE PLANNING BOARD REGARDING ADEQUACY OF ACCESS TO BUILDINGS, IN ORDER TO SUBSTITUTE THE PERMISSION FROM THE ZONING BOARD OF APPEALS GRANTED UNDER THIS COMPREHENSIVE PERMIT.
6.6105 PRIVATE/COMMON DRIVEWAYS IN THE BUSINESS, BUSINESS 1, OFFICE PARK, TOWN CENTER, AND INDUSTRIAL-COMMERCIAL DISTRICTS
WAIVER OF THE REQUIREMENT THAT PRIVATE/COMMON DRIVEWAYS ARE ALLOWED IN THE IC DISTRICT ONLY BY SPECIAL PERMIT OF THE PLANNING BOARD, IN ORDER TO SUBSTITUTE THE PERMISSION FROM THE ZONING BOARD OF APPEALS UNDER THIS COMPREHENSIVE PERMIT.
7.7004(G) SPECIAL REGULATIONS AQUIFER PROTECTION DISTRICT
WAIVER OF REQUIREMENT THAT THERE BE NO DISPOSAL OF SANITARY WASTE TO A SUBSURFACE DISPOSAL SYSTEM IN QUANTITIES EXCEEDING 440 GALLONS PER DAY PER ACRE OF AQUIFER PROTECTION DISTRICT CONTAINED WITHIN THE LOT, IN ORDER TO ALLOW QUANTITIES OF UP TO 750 GALLONS PER DAY PER ACRE OF THE SITE IN THE AQUIFER PROTECTION DISTRICT IN THE EVENT RESERVE LEACHING FIELDS ARE USED.
7.7007(1) DESIGN REQUIREMENTS
WAIVER OF REQUIREMENT THAT WHERE A PORTION OF THE SITE IS LOCATED OUTSIDE OF THE AQUIFER PROTECTION DISTRICT, POTENTIAL POLLUTION SOURCES, SUCH AS ON SITE DISPOSAL SYSTEMS, SHOULD BE LOCATED OUTSIDE THE DISTRICT BOUNDARIES IN ORDER TO ALLOW RESERVE LEACHING FIELD TO BE LOCATED WITHIN THE AQUIFER PROTECTION DISTRICT.
7.7104(D) AND (I) W-DISTRICT USE REGULATIONS
WAIVER OF REQUIREMENTS FOR SPECIAL PERMIT FOR USE IN THE W-DISTRICT, IN ORDER TO SUBSTITUTE APPROVAL UNDER THIS COMPREHENSIVE PERMIT.
7.7106 SUBMITTALS
WAIVER OF REQUIREMENTS FOR SPECIAL PERMIT APPLICATIONS TO BE PREPARED AND SUBMITTED TO THE BOARD OF APPEALS, IN ORDER TO PERMIT ONE COMPREHENSIVE SUBMISSION TO THE BOARD TO BE ACTED ON UNDER G.L. C. 40B, §21.
7.7109 PROCEDURES
WAIVER OF REQUIREMENT FOR SPECIAL PERMIT APPLICATIONS TO BE PREPARED AND SUBMITTED TO THE BOARD OF APPEALS IN ORDER TO PERMIT A SINGLE COMPREHENSIVE PERMIT SUBMISSION TO THE BOARD TO BE ACTED UPON UNDER G.L. C.40B, §21.
7.7200 LANDS BORDERING THE W-DISTRICT
WAIVER OF REQUIREMENT FOR SPECIAL PERMIT TO PLACE STRUCTURES WITHIN ONE HUNDRED (100') FEET OF THE W-DISTRICT, IN ORDER TO PERMIT CONSTRUCTION OF WARD ROAD AND A FIRE POND WITHIN 100' OF W-DISTRICT.
8.8000 SITE PLAN APPROVAL & DESIGN REVIEW
WAIVER OF REQUIREMENT FOR SITE PLAN REVIEW BY THE PLANNING BOARD FOR THE CONSTRUCTION OF MULTI-FAMILY STRUCTURES AND PARKING AREAS ASSOCIATED WITH MULTI-FAMILY STRUCTURES.
9.9001(2) BUILDING PERMITS
WAIVER TO REQUIREMENT THAT NO BUILDING PERMIT SHALL BE ISSUED BY THE INSPECTOR OF BUILDINGS WITHOUT THE WRITTEN APPROVAL OF A SITE PLAN BY THE PLANNING BOARD.

WAIVERS FROM TOWN OF BOXBOROUGH REGULATIONS FOR THE WETLAND BYLAW:
SECTION 2.5.3.1 PERFORMANCE STANDARDS
WAIVER OF PROHIBITION OF PARKING LOTS, PERMANENT STRUCTURES, AND SANITARY WASTE DISPOSAL SYSTEMS WITHIN ADJACENT LAND RESOURCE AREA, IN ORDER TO PERMIT PARKING LOTS, PERMANENT STRUCTURES AND SANITARY WASTE DISPOSAL SYSTEMS WITHIN ADJACENT LAND RESOURCE AREA. PERMANENT STRUCTURES WITHIN THE ADJACENT LAND RESOURCE AREA ACCORDANCE WITH THE SITE PLAN APPROVED FOR THE PROJECT UNDER THIS COMPREHENSIVE PERMIT.

WAIVERS FROM BOXBOROUGH COMPREHENSIVE PERMIT RULES OF THE ZONING BOARD OF APPEALS:
SECTION 3.02(I) LIST OF REQUESTED EXCEPTIONS
WAIVER OF REQUIREMENT THAT APPLICANT PROVIDES A COMPLETE LIST OF ALL REQUESTED EXCEPTIONS AT THE TIME OF THE INITIAL FILING OF THE APPLICATION, IN ORDER TO PERMIT SUCH LIST TO BE REVISED AS THE PROJECT EVOLVES THROUGH THE PERMITTING AND APPROVAL PROCESS.

COMMONWEALTH OF MASSACHUSETTS
TIMOTHY J. WILLIAMS
CIVIL
No. 43119
REGISTERED PROFESSIONAL ENGINEER
2015

PROFESSIONAL ENGINEER FOR ALLEN & MAJOR ASSOCIATES, INC.

REV	DATE	DESCRIPTION
9.	07/08/2015	ISSUED FOR DEFINITIVE SITE PLAN
8.	06/12/2015	REVISED PER FIRE DEPARTMENT COMMENTS
7.	05/15/2015	ISSUED FOR PERMIT
6.	05/05/2015	ISSUED FOR DEP PERMIT APPROVAL
5.	05/04/2015	REVISED FOR PRICING
4.	03/26/2015	REVISED PER TOWN COMMENTS
3.	03/02/2015	ISSUED FOR MEPA
2.	02/27/2015	REVISED PER TOWN COMMENTS
1.	02/12/2015	ISSUED FOR ZONING BOARD OF APPEALS

APPLICANT:
JPI
3 WEST MAIN STREET, SUITE 203
IRVINGTON, NY 10533

PROJECT:
DEFINITIVE SITE PLAN SET
JEFFERSON AT BEAVER BROOK
BOXBOROUGH, MA

PROJECT NO.	2075-01	DATE:	02-11-2015
SCALE:	AS NOTED	DWG. NAME:	C2075-10
DESIGNED BY:	SJL	CHECKED BY:	CMQ

PREPARED BY:
ALLEN & MAJOR ASSOCIATES, INC.
civil & structural engineering • land surveying
environmental consulting • landscape architecture
www.allenmajor.com
100 COMMERCE WAY
P.O. BOX 2118
WOBURN MA 01888-0118
TEL: (781) 935-6889
FAX: (781) 935-2896
WOBURN, MA • LAKEVILLE, MA • MANCHESTER, NH

THIS DRAWING HAS BEEN PREPARED IN ELECTRONIC FORMAT. CLIENT/CLIENT'S REPRESENTATIVE OR CONSULTANT MAY BE PROVIDED COPIES OF DRAWINGS AND SPECIFICATIONS ON MAGNETIC MEDIA FOR HIS/HER INFORMATION AND USE FOR SPECIFIC APPLICATION TO THIS PROJECT. DUE TO THE POTENTIAL THAT THE MAGNETIC INFORMATION MAY BE MODIFIED UNINTENTIONALLY OR OTHERWISE, ALLEN & MAJOR ASSOCIATES, INC. MAY REMOVE ALL INDICATION OF THE DOCUMENT'S AUTHORSHIP ON THE MAGNETIC MEDIA. PRINTED REPRESENTATIONS OF THE DRAWINGS AND SPECIFICATIONS ISSUED SHALL BE THE ONLY RECORD COPIES OF ALLEN & MAJOR ASSOCIATES, INC.'S WORK PRODUCT.

DRAWING TITLE: DETAILS
SHEET No. D-6

Copyright©2015 Allen & Major Associates, Inc. All Rights Reserved

N:\PROJECTS\2075-01\CIVIL\DRAWINGS\CURRENT\2075-01 - DETAILS.DWG

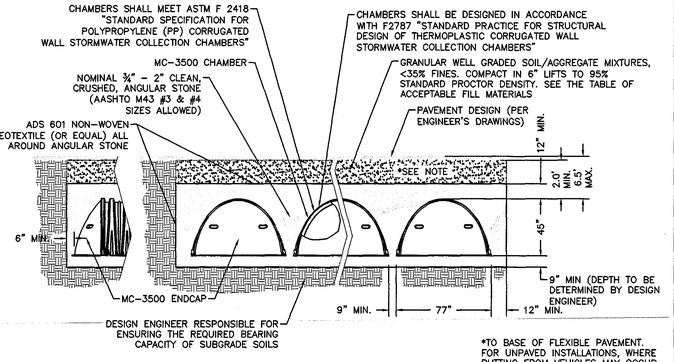

*TO BASE OF FLEXIBLE PAVEMENT. FOR UNPAVED INSTALLATIONS, WHERE RUTTING FROM VEHICLES MAY OCCUR, INCREASE COVER TO 30".

NOTES:

1. PERIMETER STONE MUST ALWAYS BE BROUGHT UP EVENLY WITH BACKFILL OF BED.
2. PERIMETER STONE MUST EXTEND HORIZONTALLY TO THE EXCAVATION WALL FOR BOTH STRAIGHT OR SLOPED SIDEWALLS.
3. THE INSTALLED CHAMBER SYSTEM SHALL PROVIDE THE LOAD FACTORS SPECIFIED IN THE AASHTO LRFD BRIDGE DESIGN SPECIFICATIONS SECTION 12.12 FOR EARTH AND LIVE LOADS, WITH CONSIDERATION FOR IMPACT AND MULTIPLE VEHICLE PRESENCES.

StormTech®
Detention • Retention • Water Quality

70 INWOOD ROAD, SUITE 3 | ROCKY HILL | CT | 06067
860-529-8188 | 888-892-2694 | WWW.STORMTECH.COM

STORMTECH MC-3500 TYPICAL CROSS-SECTION (1)
NOT TO SCALE

UIS#1 PROPOSED LAYOUT

(96) STORMTECH MC-3500 CHAMBERS
(18) STORMTECH MC-3500 END CAPS
INSTALLED WITH 12" COVER STONE,
9" BASE STONE, 40% STONE VOID
AREA OF SYSTEM: 5,874 FT²
PERIMETER OF SYSTEM: 310 FT

UIS#2 PROPOSED LAYOUT

(32) STORMTECH MC-3500 CHAMBERS
(8) STORMTECH MC-3500 END CAPS
INSTALLED WITH 12" COVER STONE,
9" BASE STONE, 40% STONE VOID
AREA OF SYSTEM: 1,994 FT²
PERIMETER OF SYSTEM: 207 FT

PROPOSED UIS#1 & UIS#2 ELEVATIONS

FINISHED GRADE	
(TOP OF FLEXIBLE PAVEMENT):	290.50
TOP OF STONE:	285.90
TOP OF CHAMBER:	284.90
BOTTOM OF CHAMBER:	281.15
BOTTOM OF STONE:	280.40

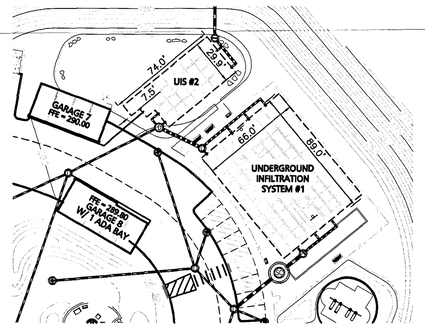

STORMTECH MC-3500 CHAMBERS (2)
NOT TO SCALE

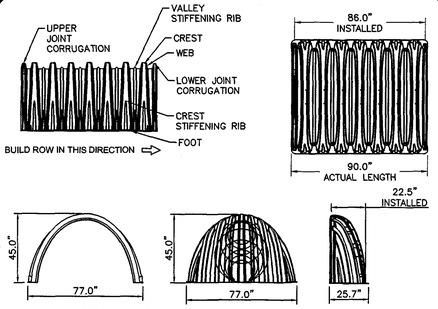

NOMINAL CHAMBER SPECIFICATIONS

SIZE (W X H X INSTALLED LENGTH)	77.0" X 45.0" X 86.0"
CHAMBER STORAGE	109.9 CUBIC FEET
MINIMUM INSTALLED STORAGE*	178.9 CUBIC FEET
WEIGHT	135.0 lbs.

NOMINAL END CAP SPECIFICATIONS

SIZE (W X H X INSTALLED LENGTH)	77.0" X 45.0" X 22.5"
END CAP STORAGE	14.9 CUBIC FEET
MINIMUM INSTALLED STORAGE*	46.0 CUBIC FEET
WEIGHT	50.0 lbs.

*ASSUMES 12" STONE ABOVE, 9" STONE FOUNDATION AND BETWEEN CHAMBERS, 12" STONE PERIMETER IN FRONT OF END CAPS AND 40% STONE POROSITY

STUBS AT BOTTOM OF END CAP FOR PART NUMBERS ENDING WITH "B"
STUBS AT TOP OF END CAP FOR PART NUMBERS ENDING WITH "T"

PART #	STUB	B	C
MC3500IEPP06T	6" (150 mm)	33.21" (844 mm)	---
MC3500IEPP06B		---	0.66" (17 mm)
MC3500IEPP08T	8" (200 mm)	31.16" (791 mm)	---
MC3500IEPP08B		---	0.81" (21 mm)
MC3500IEPP10T	10" (250 mm)	29.04" (738 mm)	---
MC3500IEPP10B		---	0.93" (24 mm)
MC3500IEPP12T	12" (300 mm)	26.36" (670 mm)	---
MC3500IEPP12B		---	1.35" (34 mm)
MC3500IEPP15T	15" (375 mm)	23.39" (594 mm)	---
MC3500IEPP15B		---	1.50" (38 mm)
MC3500IEPP18TC	18" (450 mm)	20.03" (509 mm)	---
MC3500IEPP18BC		---	1.77" (45 mm)
MC3500IEPP24TC	24" (600 mm)	14.48" (368 mm)	---
MC3500IEPP24BC		---	2.06" (52 mm)
MC3500IEPP30BC	30" (750 mm)	---	

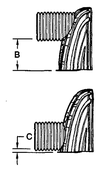

NOTE: ALL DIMENSIONS ARE NOMINAL

1) CUSTOM PRE-CORED INVERTS ARE AVAILABLE UPON REQUEST. INVENTORIED MANIFOLDS INCLUDE 12-24" SIZE ON SIZE AND 15-48" ECCENTRIC MANIFOLDS.
2) CUSTOM INVERT LOCATIONS ON THE MC-3500 END CAP CUT IN THE FIELD ARE NOT RECOMMENDED FOR PIPE SIZES GREATER THAN 10". THE INVERT LOCATION IN COLUMN 'B' ARE THE HIGHEST POSSIBLE FOR THE PIPE SIZE.

MC-3500 TECHNICAL SPECIFICATION (3)
NOT TO SCALE

1. STORMTECH LLC ("STORMTECH") REQUIRES INSTALLING CONTRACTORS TO USE AND UNDERSTAND STORMTECH'S LATEST INSTALLATION INSTRUCTIONS PRIOR TO BEGINNING SYSTEM INSTALLATION.
2. OUR TECHNICAL SERVICES DEPARTMENT OFFERS INSTALLATION CONSULTATIONS TO INSTALLING CONTRACTORS. CONTACT OUR TECHNICAL SERVICES REPRESENTATIVE AT LEAST 30 DAYS PRIOR TO SYSTEM INSTALLATION TO ARRANGE A PRE-INSTALLATION CONSULTATION. OUR REPRESENTATIVES CAN THEN ANSWER QUESTIONS OR ADDRESS COMMENTS ON THE STORMTECH CHAMBER SYSTEM AND INFORM THE INSTALLING CONTRACTOR OF THE MINIMUM INSTALLATION REQUIREMENTS BEFORE BEGINNING THE SYSTEM'S CONSTRUCTION. CALL 1-888-892-2694 TO SPEAK TO A TECHNICAL SERVICE REPRESENTATIVE OR VISIT WWW.STORMTECH.COM TO RECEIVE A COPY OF OUR INSTALLATION INSTRUCTIONS.
3. STORMTECH'S REQUIREMENTS FOR SYSTEMS WITH PAVEMENT DESIGN (ASPHALT, CONCRETE PAVERS, ETC.): MINIMUM COVER IS 18 INCHES NOT INCLUDING PAVEMENT; MAXIMUM COVER IS 96 INCHES INCLUDING PAVEMENT. FOR INSTALLATIONS THAT DO NOT INCLUDE PAVEMENT, WHERE RUTTING FROM VEHICLES MAY OCCUR, MINIMUM REQUIRED COVER IS 24 INCHES, MAXIMUM COVER IS 96 INCHES.
4. THE CONTRACTOR MUST REPORT ANY DISCREPANCIES WITH CHAMBER FOUNDATION MATERIALS BEARING CAPACITIES TO THE DESIGN ENGINEER.
5. AASHTO M288 CLASS 2 NON-WOVEN GEOTEXTILE (FILTER FABRIC) MUST BE USED AS INDICATED IN THE PROJECT PLANS.
6. STONE PLACEMENT BETWEEN CHAMBERS ROWS AND AROUND PERIMETER MUST FOLLOW INSTRUCTIONS AS INDICATED IN THE MOST CURRENT VERSION OF STORMTECH'S INSTALLATION INSTRUCTIONS.
7. BACKFILLING OVER THE CHAMBERS MUST FOLLOW REQUIREMENTS AS INDICATED IN THE MOST CURRENT VERSION OF STORMTECH'S INSTALLATION INSTRUCTIONS.
8. THE CONTRACTOR MUST REFER TO STORMTECH'S INSTALLATION INSTRUCTIONS FOR A TABLE OF ACCEPTABLE VEHICLE LOADS AT VARIOUS DEPTHS OF COVER. THIS INFORMATION IS ALSO AVAILABLE AT STORMTECH'S WEBSITE: WWW.STORMTECH.COM. THE CONTRACTOR IS RESPONSIBLE FOR PREVENTING VEHICLES THAT EXCEED STORMTECH'S REQUIREMENTS FROM TRAVELING ACROSS OR PARKING OVER THE STORMWATER SYSTEM. TEMPORARY FENCING, WARNING TAPE AND APPROPRIATELY LOCATED SIGNS ARE COMMONLY USED TO PREVENT UNAUTHORIZED VEHICLES FROM ENTERING SENSITIVE CONSTRUCTION AREAS.
9. THE CONTRACTOR MUST APPLY EROSION AND SEDIMENT CONTROL MEASURES TO PROTECT THE STORMWATER SYSTEM DURING ALL PHASES OF SITE CONSTRUCTION PER LOCAL CODES AND DESIGN ENGINEER'S SPECIFICATIONS.
10. STORMTECH PRODUCT WARRANTY IS LIMITED. SEE CURRENT PRODUCT WARRANTY FOR DETAILS. TO ACQUIRE A COPY CALL STORMTECH AT 1-888-892-2694 OR VISIT WWW.STORMTECH.COM.

STORMTECH® GENERAL NOTES (4)
NOT TO SCALE

MATERIAL LOCATION		DESCRIPTION	AASHTO MATERIAL CLASSIFICATIONS	COMPACTION / DENSITY REQUIREMENT
D	**FINAL FILL:** FILL MATERIAL FOR LAYER 'D' STARTS FROM THE TOP OF THE 'C' LAYER TO THE BOTTOM OF FLEXIBLE PAVEMENT OR UNPAVED FINISHED GRADE ABOVE. NOTE THAT PAVEMENT SUB-BASE MAY BE PART OF THE 'D' LAYER	ANY SOIL/ROCK MATERIALS, NATIVE SOILS, OR PER ENGINEER'S PLANS. CHECK PLANS FOR PAVEMENT SUB-GRADE REQUIREMENTS.	N/A	PREPARE PER SITE DESIGN ENGINEER'S PLANS. PAVED INSTALLATIONS MAY HAVE STRINGENT MATERIAL AND PREPARATION REQUIREMENTS.
C	**INITIAL FILL:** FILL MATERIAL FOR LAYER 'C' STARTS FROM THE TOP OF THE EMBEDMENT STONE ('B' LAYER) TO 18" (450 mm) ABOVE THE TOP OF THE CHAMBER. NOTE THAT PAVEMENT SUB-BASE MAY BE A PART OF THE 'C' LAYER.	GRANULAR WELL-GRADED SOIL/AGGREGATE MIXTURES, <35% FINES OR PROCESSED AGGREGATE. MOST PAVEMENT SUB-BASE MATERIALS CAN BE USED IN LIEU OF THIS LAYER.	AASHTO M145[1] A-1, A-2-4, A-3 OR AASHTO M43[1] 3, 357, 4, 467, 5, 56, 57, 6, 67, 68, 7, 78, 8, 89, 9, 10	BEGIN COMPACTIONS AFTER 12" (300 mm) OF MATERIAL OVER THE CHAMBERS IS REACHED. COMPACT ADDITIONAL LAYERS IN 6" (150 mm) MAX LIFTS TO A MIN. 95% PROCTOR DENSITY FOR WELL GRADED MATERIAL AND 95% RELATIVE DENSITY FOR PROCESSED AGGREGATE MATERIALS. ROLLER GROSS VEHICLE WEIGHT NOT TO EXCEED 12,000 lbs (53 kN). DYNAMIC FORCE NOT TO EXCEED 20,000 lbs (89 kN).
B	**EMBEDMENT STONE:** FILL SURROUNDING THE CHAMBERS FROM THE FOUNDATION STONE ('A' LAYER) TO THE 'C' LAYER ABOVE.	CLEAN, CRUSHED, ANGULAR STONE, NOMINAL SIZE DISTRIBUTION BETWEEN 3/4-2 INCH (20-50 mm)	AASHTO M43[1] 3, 357, 4, 467, 5, 56, 57	NO COMPACTION REQUIRED.
A	**FOUNDATION STONE:** FILL BELOW CHAMBERS FROM THE SUB-GRADE UP TO THE FOOT (BOTTOM) OF THE CHAMBER.	CLEAN, CRUSHED, ANGULAR STONE, NOMINAL SIZE DISTRIBUTION BETWEEN 3/4-2 INCH (20-50 mm)	AASHTO M43[1] 3, 357, 4, 467, 5, 56, 57	PLATE COMPACT OR ROLL TO ACHIEVE A FLAT SURFACE. [2] [3]

PLEASE NOTE:
1. THE LISTED AASHTO DESIGNATIONS ARE FOR GRADATIONS ONLY. THE STONE MUST ALSO BE CLEAN, CRUSHED, ANGULAR. FOR EXAMPLE, A SPECIFICATION FOR #4 STONE WOULD STATE: "CLEAN, CRUSHED, ANGULAR NO. 4 (AASHTO M43) STONE".
2. STORMTECH COMPACTION REQUIREMENTS ARE MET FOR 'A' LOCATION MATERIALS WHEN PLACED AND COMPACTED IN 9" (230 mm) (MAX) LIFTS USING TWO FULL COVERAGES WITH A VIBRATORY COMPACTOR.
3. WHERE INFILTRATION SURFACES MAY BE COMPROMISED BY COMPACTION, FOR STANDARD DESIGN LOAD CONDITIONS, A FLAT SURFACE MAY BE ACHIEVED BY RAKING OR DRAGGING WITHOUT COMPACTION EQUIPMENT. FOR SPECIAL LOAD DESIGNS, CONTACT STORMTECH FOR COMPACTION REQUIREMENTS.

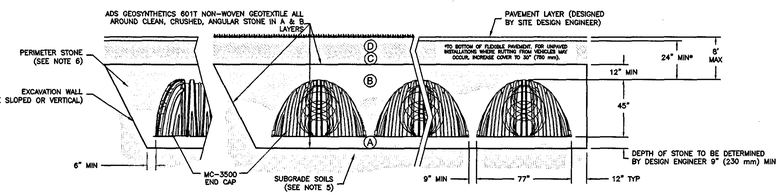

NOTES:

1. MC-3500 CHAMBERS SHALL CONFORM TO THE REQUIREMENTS OF ASTM F2418 "STANDARD SPECIFICATION FOR POLYPROPYLENE (PP) CORRUGATED WALL STORMWATER COLLECTION CHAMBERS".
2. MC-3500 CHAMBERS SHALL BE DESIGNED IN ACCORDANCE WITH ASTM F2787 "STANDARD PRACTICE FOR STRUCTURAL DESIGN OF THERMOPLASTIC CORRUGATED WALL STORMWATER COLLECTION CHAMBERS".
3. "ACCEPTABLE FILL MATERIALS" TABLE ABOVE PROVIDES MATERIAL LOCATIONS, DESCRIPTIONS, GRADATIONS, AND COMPACTION REQUIREMENTS FOR FOUNDATION, EMBEDMENT, AND FILL MATERIALS.
4. THE "SITE DESIGN ENGINEER" REFERS TO THE ENGINEER RESPONSIBLE FOR THE DESIGN AND LAYOUT OF THE STORMTECH CHAMBERS FOR THIS PROJECT.
5. THE SITE DESIGN ENGINEER IS RESPONSIBLE FOR ASSESSING THE BEARING RESISTANCE (ALLOWABLE BEARING CAPACITY) OF THE SUBGRADE SOILS AND THE DEPTH OF FOUNDATION STONE WITH CONSIDERATION FOR THE RANGE OF EXPECTED SOIL MOISTURE CONDITIONS.
6. PERIMETER STONE MUST BE EXTENDED HORIZONTALLY TO THE EXCAVATION WALL FOR BOTH VERTICAL AND SLOPED EXCAVATION WALLS.
7. ONCE LAYER 'C' IS PLACED, ANY SOIL/MATERIAL CAN BE PLACED IN LAYER 'D' UP TO THE FINISHED GRADE. MOST PAVEMENT SUBBASE SOILS CAN BE USED TO REPLACE THE MATERIAL REQUIREMENTS OF LAYER 'C' OR 'D' AT THE SITE DESIGN ENGINEER'S DISCRETION.

ACCEPTABLE FILL MATERIALS: STORMTECH MC-3500 CHAMBER SYSTEMS (5)
NOT TO SCALE

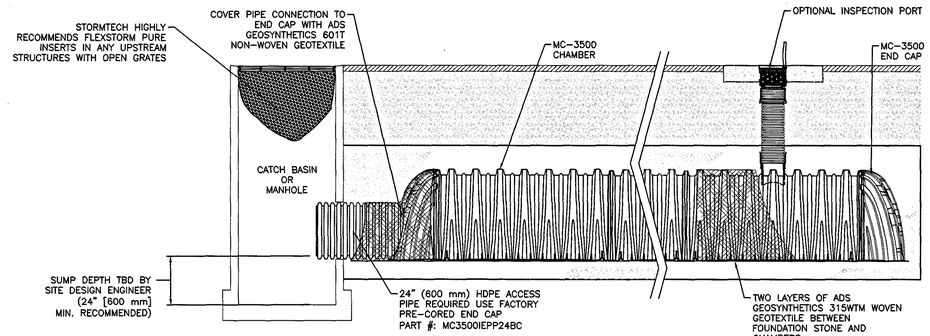

MC-3500 ISOLATOR ROW DETAIL
NTS

INSPECTION & MAINTENANCE

STEP 1) INSPECT ISOLATOR ROW FOR SEDIMENT
- A. INSPECTION PORTS (IF PRESENT)
  - A.1. REMOVE/OPEN LID ON NYLOPLAST INLINE DRAIN
  - A.2. REMOVE AND CLEAN FLEXSTORM FILTER IF INSTALLED
  - A.3. USING A FLASHLIGHT AND STADIA ROD, MEASURE DEPTH OF SEDIMENT AND RECORD ON MAINTENANCE LOG
  - A.4. LOWER A CAMERA INTO ISOLATOR ROW FOR VISUAL INSPECTION OF SEDIMENT LEVELS (OPTIONAL)
  - A.5. IF SEDIMENT IS AT, OR ABOVE, 3" (80 mm) PROCEED TO STEP 2. IF NOT, PROCEED TO STEP 3.
- B. ALL ISOLATOR ROWS
  - B.1. REMOVE COVER FROM STRUCTURE AT UPSTREAM END OF ISOLATOR ROW
  - B.2. USING A FLASHLIGHT, INSPECT DOWN THE ISOLATOR ROW THROUGH OUTLET PIPE
    - i) MIRRORS ON POLES OR CAMERAS MAY BE USED TO AVOID A CONFINED SPACE ENTRY
    - ii) FOLLOW OSHA REGULATIONS FOR CONFINED SPACE ENTRY IF ENTERING MANHOLE
  - B.3. IF SEDIMENT IS AT, OR ABOVE, 3" (80 mm) PROCEED TO STEP 2. IF NOT, PROCEED TO STEP 3.

STEP 2) CLEAN OUT ISOLATOR ROW USING THE JETVAC PROCESS
- A. A FIXED CULVERT CLEANING NOZZLE WITH REAR FACING SPREAD OF 45" (1.1 m) OR MORE IS PREFERRED
- B. APPLY MULTIPLE PASSES OF JETVAC UNTIL BACKFLUSH WATER IS CLEAN
- C. VACUUM STRUCTURE SUMP AS REQUIRED

STEP 3) REPLACE ALL COVERS, GRATES, FILTERS, AND LIDS; RECORD OBSERVATIONS AND ACTIONS.

STEP 4) INSPECT AND CLEAN BASINS AND MANHOLES UPSTREAM OF THE STORMTECH SYSTEM.

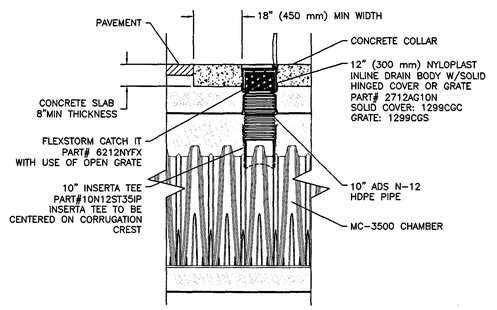

NOTES

1. INSPECT EVERY 6 MONTHS DURING THE FIRST YEAR OF OPERATION. ADJUST THE INSPECTION INTERVAL BASED ON PREVIOUS OBSERVATIONS OF SEDIMENT ACCUMULATION AND HIGH WATER ELEVATIONS.
2. CONDUCT JETTING AND VACTORING ANNUALLY OR WHEN INSPECTION SHOWS THAT MAINTENANCE IS NECESSARY.

MC-3500 ISOLATOR ROW DETAIL (6)
NOT TO SCALE

N:\PROJECTS\2075-01\CIVIL\DRAWINGS\CURRENT\2075-01 - DETAILS.DWG

JPI

WAIVERS OF TOWN OF BOXBOROUGH ZONING BYLAWS:
4.4003(1) USE REGULATION SCHEDULE
WAIVER TO PERMIT SINGLE-FAMILY AND MULTI-FAMILY ATTACHED RESIDENTIAL USES NOT OTHERWISE PERMITTED IN THE INDUSTRIAL COMMERCIAL DISTRICT (I.E., THE PROPOSED TWO (2) SINGLE FAMILY DWELLINGS AND THE PROPOSED 244 APARTMENT UNITS IN ELEVEN (11) MULTI-FAMILY BUILDINGS, FOR A TOTAL OF 246 UNITS)
4.4033 USE REGULATION SCHEDULE
WAIVER TO PERMIT A USE WHICH IS NOT OTHERWISE ACCESSORY TO INDUSTRIAL-COMMERCIAL USES, I.E., A CLUBHOUSE/RENTAL OFFICE.
5.3002 DIMENSIONAL SCHEDULE
WAIVER OF REQUIREMENT FOR A MAXIMUM FLOOR AREA RATIO OF 0.10.
6.6004 SURFACE, CIRCULATION, AND LANDSCAPING REQUIREMENTS
WAIVER OF REQUIREMENT THAT AUTOMOBILE PARKING SPACES SHALL NOT BE LESS THAN 10 FEET BY 20 FEET, IN ORDER TO ALLOW PARKING SPACE OF 9 FEET BY 18 FEET.
6.6103 MULTIPLE BUILDINGS ON ONE LOT
WAIVER OF REQUIREMENT THAT WHERE MORE THAN ONE BUILDING IS PROPOSED TO BE BUILT UPON A LOT, THE PLAN SHALL BE REVIEWED BY THE PLANNING BOARD REGARDING ADEQUACY OF ACCESS TO BUILDINGS, IN ORDER TO SUBSTITUTE THE PERMISSION FROM THE ZONING BOARD OF APPEALS GRANTED UNDER THIS COMPREHENSIVE PERMIT.
6.6105 PRIVATE/COMMON DRIVEWAYS IN THE BUSINESS, BUSINESS 1, OFFICE PARK, TOWN CENTER, AND INDUSTRIAL-COMMERCIAL DISTRICTS
WAIVER OF THE REQUIREMENT THAT PRIVATE/COMMON DRIVEWAYS ARE ALLOWED IN THE IC DISTRICT ONLY BY SPECIAL PERMIT OF THE PLANNING BOARD, IN ORDER TO SUBSTITUTE THE PERMISSION FROM THE ZONING BOARD OF APPEALS UNDER THIS COMPREHENSIVE PERMIT.
7.7004(G) SPECIAL REGULATIONS AQUIFER PROTECTION DISTRICT
WAIVER OF REQUIREMENT THAT THERE BE NO DISPOSAL OF SANITARY WASTE TO A SUBSURFACE DISPOSAL SYSTEM IN QUANTITIES EXCEEDING 440 GALLONS PER DAY PER ACRE OF AQUIFER PROTECTION DISTRICT CONTAINED WITHIN THE LOT, IN ORDER TO ALLOW QUANTITIES OF UP TO 750 GALLONS PER DAY PER ACRE OF THE SITE IN THE AQUIFER PROTECTION DISTRICT IN THE EVENT RESERVE LEACHING FIELDS ARE USED.
7.7007(1) DESIGN REQUIREMENTS
WAIVER OF REQUIREMENT THAT WHERE A PORTION OF THE SITE IS LOCATED OUTSIDE OF THE AQUIFER PROTECTION DISTRICT, POTENTIAL POLLUTION SOURCES, SUCH AS ON SITE DISPOSAL SYSTEMS, SHOULD BE LOCATED OUTSIDE THE DISTRICT BOUNDARIES, IN ORDER TO ALLOW RESERVE LEACHING FIELD TO BE LOCATED WITHIN THE AQUIFER PROTECTION DISTRICT.
7.7104(G) AND (H) W-DISTRICT USE REGULATIONS
WAIVER OF REQUIREMENTS FOR SPECIAL PERMIT FOR USE IN THE W-DISTRICT, IN ORDER TO SUBSTITUTE APPROVAL UNDER THIS COMPREHENSIVE PERMIT.
7.7105 SUBMITTALS
WAIVER OF REQUIREMENTS FOR SPECIAL PERMIT APPLICATIONS TO BE PREPARED AND SUBMITTED TO THE BOARD OF APPEALS, IN ORDER TO PERMIT ONE COMPREHENSIVE SUBMISSION TO THE BOARD TO BE ACTED ON UNDER G.L. C. 40B, §21.
7.7109 PROCEDURES
WAIVER OF REQUIREMENT FOR SPECIAL PERMIT APPLICATIONS TO BE PREPARED AND SUBMITTED TO THE BOARD OF APPEALS IN ORDER TO PERMIT SINGLE COMPREHENSIVE PERMIT SUBMISSION TO THE BOARD TO BE ACTED UPON UNDER G.L. C.40B, §21.
7.7200 LANDS WITHIN THE W-DISTRICT
WAIVER OF REQUIREMENT FOR SPECIAL PERMIT TO PLACE STRUCTURES WITHIN ONE HUNDRED (100') FEET OF THE W-DISTRICT, IN ORDER TO PERMIT CONSTRUCTION OF WARD ROAD AND A FIRE POND WITHIN 100' OF W-DISTRICT.
8.8000 SITE PLAN APPROVAL & DESIGN REVIEW
WAIVER OF REQUIREMENT FOR SITE PLAN REVIEW BY THE PLANNING BOARD FOR THE CONSTRUCTION OF MULTI-FAMILY STRUCTURES AND PARKING AREAS ASSOCIATED WITH MULTI-FAMILY STRUCTURES.
9.9001(2) BUILDING PERMITS
WAIVER OF REQUIREMENT THAT NO BUILDING PERMIT SHALL BE ISSUED BY THE INSPECTOR OF BUILDINGS WITHOUT THE WRITTEN APPROVAL OF A SITE PLAN BY THE PLANNING BOARD.

WAIVERS FROM TOWN OF BOXBOROUGH REGULATIONS FOR THE WETLAND BYLAW:
SECTION 2.5.3.1 PERFORMANCE STANDARDS
WAIVER OF PROHIBITION OF PARKING LOTS, PERMANENT STRUCTURES, AND MAINTENANCE WASTE DISPOSAL SYSTEMS WITHIN ADJACENT LAND RESOURCE AREA, IN ORDER TO ALLOW SITE PLACEMENT OF THE PROPOSED SANITARY WASTE DISPOSAL SYSTEM, PARKING LOT, ROAD AND OTHER PERMANENT STRUCTURES WITHIN THE ADJACENT LAND RESOURCE AREA, IN ACCORDANCE WITH THE SITE PLAN APPROVED FOR THE PROJECT UNDER THIS COMPREHENSIVE PERMIT.

WAIVERS FROM BOXBOROUGH COMPREHENSIVE PERMIT RULES OF THE HOUSING BOARD OF APPEALS:
SECTION 3.02(1) LIST OF REQUESTED EXCEPTIONS
WAIVER OF REQUIREMENT THAT APPLICANT PROVIDES A COMPLETE LIST OF ALL REQUESTED EXCEPTIONS AT THE TIME OF THE INITIAL FILING OF THE APPLICATION IN ORDER TO PERMIT THE LIST TO BE REVISED AS THE PROJECT EVOLVES THROUGH THE HEARING AND APPRAISAL PROCESS.

7/9/15
TIMOTHY J. WILLIAMS CIVIL No.43119 REGISTERED PROFESSIONAL ENGINEER
PROFESSIONAL ENGINEER FOR ALLEN & MAJOR ASSOCIATES, INC.

REV	DATE	DESCRIPTION
9.	07/08/2015	ISSUED FOR DEFINITIVE SITE PLAN
8.	06/12/2015	REVISED PER FIRE DEPARTMENT COMMENTS
7.	05/15/2015	ISSUED FOR PERMIT
6.	05/05/2015	ISSUED FOR DEP PERMIT APPROVAL
5.	05/04/2015	REVISED FOR PRICING
4.	03/26/2015	REVISED PER TOWN COMMENTS
3.	03/02/2015	ISSUED FOR MEPA
2.	02/27/2015	REVISED PER TOWN COMMENTS
1.	02/12/2015	ISSUED FOR ZONING BOARD OF APPEALS

APPLICANT:
JPI
3 WEST MAIN STREET, SUITE 203
IRVINGTON, NY 10533

PROJECT:
DEFINITIVE SITE PLAN SET
JEFFERSON AT BEAVER BROOK
BOXBOROUGH, MA

PROJECT NO.	2075-01	DATE:	02-11-2015
SCALE:	AS NOTED	DWG. NAME:	C2075-10
DESIGNED BY:	SJL	CHECKED BY:	CMQ

PREPARED BY:
ALLEN & MAJOR ASSOCIATES, INC.
civil & structural engineering • land surveying
environmental consulting • landscape architecture
www.allenmajor.com
100 COMMERCE WAY
P.O. BOX 2118
WOBURN MA 01888-0118
TEL: (781) 935-6889
FAX: (781) 935-2896
WOBURN, MA • LAKEVILLE, MA • MANCHESTER, NH

THIS DRAWING HAS BEEN PREPARED IN ELECTRONIC FORMAT. CLIENT/CLIENT'S REPRESENTATIVE OR CONSULTANT MAY BE PROVIDED COPIES OF DRAWINGS AND SPECIFICATIONS ON MAGNETIC MEDIA FOR HIS/HER INFORMATION AND USE FOR SPECIFIC APPLICATION TO THIS PROJECT. DUE TO THE POTENTIAL THAT THE MAGNETIC INFORMATION MAY BE MODIFIED UNINTENTIONALLY OR OTHERWISE, ALLEN & MAJOR ASSOCIATES, INC. MAY REMOVE ALL INDICATION OF THE DOCUMENT'S AUTHORSHIP ON THE MAGNETIC MEDIA. PRINTED REPRESENTATIONS OF THE DRAWINGS AND SPECIFICATIONS ISSUED SHALL BE THE ONLY RECORD COPIES OF ALLEN & MAJOR ASSOCIATES, INC.'S WORK PRODUCT.

DRAWING TITLE: DETAILS
SHEET No. D-7

Copyright©2015 Allen & Major Associates, Inc. All Rights Reserved

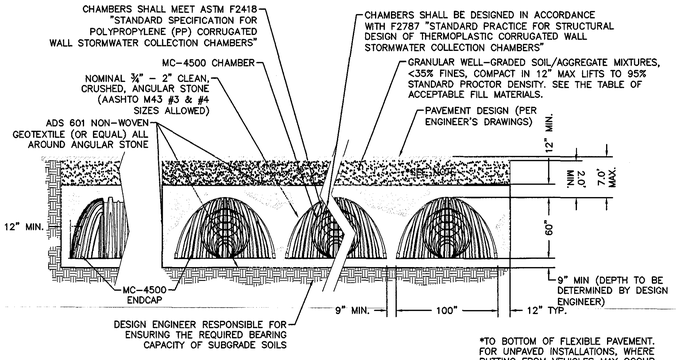

*TO BOTTOM OF FLEXIBLE PAVEMENT. FOR UNPAVED INSTALLATIONS, WHERE RUTTING FROM VEHICLES MAY OCCUR, INCREASE COVER TO 30".

NOTES:

1. PERIMETER STONE MUST ALWAYS BE BROUGHT UP EVENLY WITH BACKFILL OF BED.
2. PERIMETER STONE MUST EXTEND HORIZONTALLY TO THE EXCAVATION WALL FOR BOTH STRAIGHT OR SLOPED SIDEWALLS.
3. THE INSTALLED CHAMBER SYSTEM SHALL PROVIDE THE LOAD FACTORS SPECIFIED IN THE AASHTO LRFD BRIDGE DESIGN SPECIFICATIONS SECTION 12.12 FOR EARTH AND LIVE LOADS, WITH CONSIDERATION FOR IMPACT AND MULTIPLE VEHICLE PRESENCES.

StormTech®
Detention · Retention · Water Quality

70 INWOOD ROAD, SUITE 3 | ROCKY HILL | CT | 06067
860-529-8188 | 888-892-2694 | WWW.STORMTECH.COM

STORMTECH MC-4500 TYPICAL CROSS-SECTION (1)
NOT TO SCALE

UIS#3 PROPOSED LAYOUT

(117) STORMTECH MC-4500 CHAMBERS
(18) STORMTECH MC-4500 END CAPS
INSTALLED WITH 12" COVER STONE,
9" BASE STONE, 40% STONE VOID
AREA OF SYSTEM: 5,874 FT²
PERIMETER OF SYSTEM: 310 FT

UIS#4 PROPOSED LAYOUT

(48) STORMTECH MC-4500 CHAMBERS
(6) STORMTECH MC-4500 END CAPS
INSTALLED WITH 12" COVER STONE,
9" BASE STONE, 40% STONE VOID
AREA OF SYSTEM: 2,038 FT²
PERIMETER OF SYSTEM: 200 FT

PROPOSED UIS#3 & UIS#4 ELEVATIONS

FINISHED GRADE:	288.10
TOP OF STONE:	284.55
TOP OF CHAMBER:	283.55
BOTTOM OF CHAMBER:	278.55
BOTTOM OF STONE:	277.80

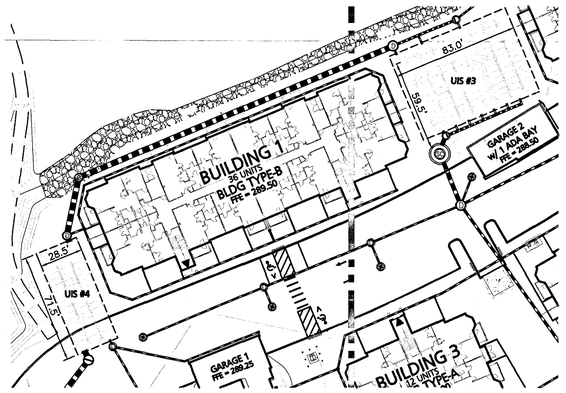

STORMTECH MC-4500 CHAMBERS (2)
NOT TO SCALE

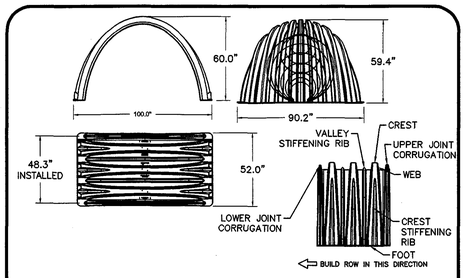

NOMINAL CHAMBER SPECIFICATIONS	
SIZE (W X H X INSTALLED LENGTH)	100.0" X 60.0" X 48.3"
CHAMBER STORAGE	106.5 CUBIC FEET
MINIMUM INSTALLED STORAGE*	162.6 CUBIC FEET
WEIGHT	130.0 lbs.

NOMINAL END CAP SPECIFICATIONS	
SIZE (W X H X INSTALLED LENGTH)	90.2" X 59.4" X 30.7"
END CAP STORAGE	35.7 CUBIC FEET
MINIMUM INSTALLED STORAGE*	108.7 CUBIC FEET
WEIGHT	135.0 lbs.

*ASSUMES 12" STONE ABOVE, 9" STONE FOUNDATION AND BETWEEN CHAMBERS, 12" STONE PERIMETER IN FRONT OF END CAPS AND 40% STONE POROSITY.

STUBS AT BOTTOM OF END CAP FOR PART NUMBERS ENDING WITH "B"
STUBS AT TOP OF END CAP FOR PART NUMBERS ENDING WITH "T"

PART #	STUB	B	C
MC4500REPE06T	6" (150 mm)	42.54" (1,081 m)	—
MC4500REPE06B		—	0.88" (22 mm)
MC4500REPE08T	8" (200 mm)	40.50" (1,029 m)	—
MC4500REPE08B		—	1.01" (26 mm)
MC4500REPE10T	10" (250 mm)	38.37" (975 mm)	—
MC4500REPE10B		—	1.33" (34 mm)
MC4500REPE12T	12" (300 mm)	35.69" (907 mm)	—
MC4500REPE12B		—	1.55" (39 mm)
MC4500REPE15T	15" (375 mm)	32.72" (831 mm)	—
MC4500REPE15B		—	1.70" (43 mm)
MC4500REPE18TC	18" (450 mm)	29.38" (746 mm)	—
MC4500REPE18BC		—	1.97" (50 mm)
MC4500REPE24TC	24" (600 mm)	23.06" (586 mm)	—
MC4500REPE24BC		—	2.28" (57 mm)
MC4500REPE30BC	30" (750 mm)	—	2.95" (75 mm)
MC4500REPE36BC	36" (900 mm)	—	3.25" (83 mm)
MC4500REPE42BC	42" (1050 mm)	—	3.55" (90 mm)

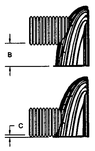

NOTE: ALL DIMENSIONS ARE NOMINAL

1) CUSTOM PRE-CORED INVERTS ARE AVAILABLE UPON REQUEST. INVENTORIED MANIFOLDS INCLUDE 12–24" SIZE ON SIZE AND 15–48" ECCENTRIC MANIFOLDS.
2) CUSTOM INVERT LOCATIONS ON THE MC-4500 END CAP CUT IN THE FIELD ARE NOT RECOMMENDED FOR PIPE SIZES GREATER THAN 10" THE INVERT LOCATION IN COLUMN 'B' ARE THE HIGHTEST POSSIBLE FOR THE PIPE SIZE.

MC-4500 TECHNICAL SPECIFICATION (3)
NOT TO SCALE

1. STORMTECH LLC ("STORMTECH") REQUIRES INSTALLING CONTRACTORS TO USE AND UNDERSTAND STORMTECH'S LATEST INSTALLATION INSTRUCTIONS PRIOR TO BEGINNING SYSTEM INSTALLATION.
2. OUR TECHNICAL SERVICES DEPARTMENT OFFERS INSTALLATION CONSULTATIONS TO INSTALLING CONTRACTORS. CONTACT OUR TECHNICAL SERVICES REPRESENTATIVE AT LEAST 30 DAYS PRIOR TO SYSTEM INSTALLATION TO ARRANGE A PRE-INSTALLATION CONSULTATION. OUR REPRESENTATIVES CAN THEN ANSWER QUESTIONS OR ADDRESS COMMENTS ON THE STORMTECH CHAMBER SYSTEM AND INFORM THE INSTALLING CONTRACTOR OF THE MINIMUM INSTALLATION REQUIREMENTS BEFORE BEGINNING THE SYSTEM'S CONSTRUCTION. CALL 1-888-892-2694 TO SPEAK TO A TECHNICAL SERVICE REPRESENTATIVE OR VISIT WWW.STORMTECH.COM TO RECEIVE A COPY OF OUR INSTALLATION INSTRUCTIONS.
3. STORMTECH'S REQUIREMENTS FOR SYSTEMS WITH PAVEMENT DESIGN (ASPHALT, CONCRETE PAVERS, ETC.): MINIMUM COVER IS 18 INCHES NOT INCLUDING PAVEMENT; MAXIMUM COVER IS 96 INCHES INCLUDING PAVEMENT. FOR INSTALLATIONS THAT DO NOT INCLUDE PAVEMENT, WHERE RUTTING FROM VEHICLES MAY OCCUR, MINIMUM REQUIRED COVER IS 24 INCHES, MAXIMUM COVER IS 96 INCHES.
4. THE CONTRACTOR MUST REPORT ANY DISCREPANCIES WITH CHAMBER FOUNDATION MATERIALS BEARING CAPACITIES TO THE DESIGN ENGINEER.
5. AASHTO M288 CLASS 2 NON-WOVEN GEOTEXTILE (FILTER FABRIC) MUST BE USED AS INDICATED IN THE PROJECT PLANS.
6. STONE PLACEMENT BETWEEN CHAMBERS ROWS AND AROUND PERIMETER MUST FOLLOW INSTRUCTIONS AS INDICATED IN THE MOST CURRENT VERSION OF STORMTECH'S INSTALLATION INSTRUCTIONS.
7. BACKFILLING OVER THE CHAMBERS MUST FOLLOW REQUIREMENTS AS INDICATED IN THE MOST CURRENT VERSION OF STORMTECH'S INSTALLATION INSTRUCTIONS.
8. THE CONTRACTOR MUST REFER TO STORMTECH'S INSTALLATION INSTRUCTIONS FOR A TABLE OF ACCEPTABLE VEHICLE LOADS AT VARIOUS DEPTHS OF COVER. THIS INFORMATION IS ALSO AVAILABLE AT STORMTECH'S WEBSITE: WWW.STORMTECH.COM. THE CONTRACTOR IS RESPONSIBLE FOR PREVENTING VEHICLES THAT EXCEED STORMTECH'S REQUIREMENTS FROM TRAVELING ACROSS OR PARKING OVER THE STORMWATER SYSTEM. TEMPORARY FENCING, WARNING TAPE AND APPROPRIATELY LOCATED SIGNS ARE COMMONLY USED TO PREVENT UNAUTHORIZED VEHICLES FROM ENTERING SENSITIVE CONSTRUCTION AREAS.
9. THE CONTRACTOR MUST APPLY EROSION AND SEDIMENT CONTROL MEASURES TO PROTECT THE STORMWATER SYSTEM DURING ALL PHASES OF SITE CONSTRUCTION PER LOCAL CODES AND DESIGN ENGINEER'S SPECIFICATIONS.
10. STORMTECH PRODUCT WARRANTY IS LIMITED. SEE CURRENT PRODUCT WARRANTY FOR DETAILS. TO ACQUIRE A COPY CALL STORMTECH AT 1-888-892-2694 OR VISIT WWW.STORMTECH.COM.

STORMTECH* GENERAL NOTES (4)
NOT TO SCALE

MATERIAL LOCATION		DESCRIPTION	AASHTO MATERIAL CLASSIFICATIONS	COMPACTION / DENSITY REQUIREMENT
D	**FINAL FILL:** FILL MATERIAL FOR LAYER 'D' STARTS FROM THE TOP OF THE 'C' LAYER TO THE BOTTOM OF FLEXIBLE PAVEMENT OR UNPAVED FINISHED GRADE ABOVE. NOTE THAT PAVEMENT SUB-BASE MAY BE PART OF THE 'D' LAYER.	ANY SOIL/ROCK MATERIALS, NATIVE SOILS, OR PER ENGINEER'S PLANS. CHECK PLANS FOR PAVEMENT SUB-GRADE REQUIREMENTS.	N/A	PREPARE PER SITE DESIGN ENGINEER'S PLANS. PAVED INSTALLATIONS MAY HAVE STRINGENT MATERIAL AND PREPARATION REQUIREMENTS.
C	**INITIAL FILL:** FILL MATERIAL FOR LAYER 'C' STARTS FROM THE TOP OF THE EMBEDMENT STONE ('B' LAYER) TO 18" (450 mm) ABOVE THE TOP OF THE CHAMBER. NOTE THAT PAVEMENT SUB-BASE MAY BE A PART OF THE 'C' LAYER.	GRANULAR WELL-GRADED SOIL/AGGREGATE MIXTURES, <35% FINES OR PROCESSED AGGREGATE. MOST PAVEMENT SUB-BASE MATERIALS CAN BE USED IN LIEU OF THIS LAYER.	AASHTO M145[1] A-1, A-2-4, A-3 OR AASHTO M43[1] 3, 357, 4, 467, 5, 56, 57, 6, 67, 68, 7, 78, 8, 89, 9, 10	BEGIN COMPACTIONS AFTER 12" (300 mm) OF MATERIAL OVER THE CHAMBERS IS REACHED. COMPACT ADDITIONAL LAYERS IN 6" (150 mm) MAX LIFTS TO A MIN. 95% PROCTOR DENSITY FOR WELL GRADED MATERIAL AND 95% RELATIVE DENSITY FOR PROCESSED AGGREGATE MATERIALS. ROLLER GROSS VEHICLE WEIGHT NOT TO EXCEED 12,000 lbs (53 kN). DYNAMIC FORCE NOT TO EXCEED 20,000 lbs (89 kN).
B	**EMBEDMENT STONE:** FILL SURROUNDING THE CHAMBERS FROM THE FOUNDATION STONE ('A' LAYER) TO THE 'C' LAYER ABOVE.	CLEAN, CRUSHED, ANGULAR STONE, NOMINAL SIZE DISTRIBUTION BETWEEN 3/4-2 INCH (20-50 mm)	AASHTO M43[1] 3, 357, 4, 467, 5, 56, 57	NO COMPACTION REQUIRED.
A	**FOUNDATION STONE:** FILL BELOW CHAMBERS FROM THE SUB-GRADE UP TO THE FOOT (BOTTOM) OF THE CHAMBER.	CLEAN, CRUSHED, ANGULAR STONE, NOMINAL SIZE DISTRIBUTION BETWEEN 3/4-2 INCH (20-50 mm)	AASHTO M43[1] 3, 357, 4, 467, 5, 56, 57	PLATE COMPACT OR ROLL TO ACHIEVE A FLAT SURFACE. [2] [3]

PLEASE NOTE:
1. THE LISTED AASHTO DESIGNATIONS ARE FOR GRADATIONS ONLY. THE STONE MUST ALSO BE CLEAN, CRUSHED, ANGULAR. FOR EXAMPLE, A SPECIFICATION FOR #4 STONE WOULD STATE: "CLEAN, CRUSHED, ANGULAR NO. 4 (AASHTO M43) STONE".
2. STORMTECH COMPACTION REQUIREMENTS ARE MET FOR 'A' LOCATION MATERIALS WHEN PLACED AND COMPACTED IN 9" (230 mm) (MAX) LIFTS USING TWO FULL COVERAGES WITH A VIBRATORY COMPACTOR.
3. WHERE INFILTRATION SURFACES MAY BE COMPROMISED BY COMPACTION, FOR STANDARD DESIGN LOAD CONDITIONS, A FLAT SURFACE MAY BE ACHIEVED BY RAKING OR DRAGGING WITHOUT COMPACTION EQUIPMENT. FOR SPECIAL LOAD DESIGNS, CONTACT STORMTECH FOR COMPACTION REQUIREMENTS.

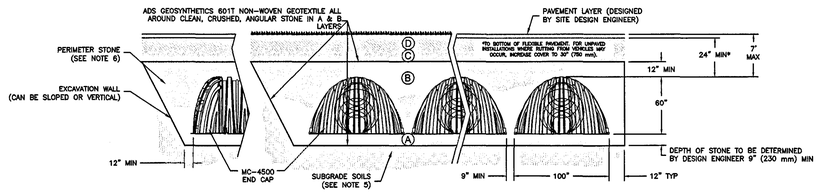

NOTES:

1. MC-4500 CHAMBERS SHALL CONFORM TO THE REQUIREMENTS OF ASTM F2418 "STANDARD SPECIFICATION FOR POLYPROPYLENE (PP) CORRUGATED WALL STORMWATER COLLECTION CHAMBERS".
2. MC-4500 CHAMBERS SHALL BE DESIGNED IN ACCORDANCE WITH ASTM F2787 "STANDARD PRACTICE FOR STRUCTURAL DESIGN OF THERMOPLASTIC CORRUGATED WALL STORMWATER COLLECTION CHAMBERS".
3. "ACCEPTABLE FILL MATERIALS" TABLE ABOVE PROVIDES MATERIAL LOCATIONS, DESCRIPTIONS, GRADATIONS, AND COMPACTION REQUIREMENTS FOR FOUNDATION, EMBEDMENT, AND FILL MATERIALS.
4. THE "SITE DESIGN ENGINEER" REFERS TO THE ENGINEER RESPONSIBLE FOR THE DESIGN AND LAYOUT OF THE STORMTECH CHAMBERS FOR THIS PROJECT.
5. THE SITE DESIGN ENGINEER IS RESPONSIBLE FOR ASSESSING THE BEARING RESISTANCE (ALLOWABLE BEARING CAPACITY) OF THE SUBGRADE SOILS AND THE DEPTH OF FOUNDATION STONE WITH CONSIDERATION FOR THE RANGE OF EXPECTED SOIL MOISTURE CONDITIONS.
6. PERIMETER STONE MUST BE EXTENDED HORIZONTALLY TO THE EXCAVATION WALL FOR BOTH VERTICAL AND SLOPED EXCAVATION WALLS.
7. ONCE LAYER 'C' IS PLACED, ANY SOIL/MATERIAL CAN BE PLACED IN LAYER 'D' UP TO THE FINISHED GRADE. MOST PAVEMENT SUBBASE SOILS CAN BE USED TO REPLACE THE MATERIAL REQUIREMENTS OF LAYER 'C' OR 'D' AT THE SITE DESIGN ENGINEER'S DISCRETION.

ACCEPTABLE FILL MATERIALS: STORMTECH MC-4500 CHAMBER SYSTEMS (5)
NOT TO SCALE

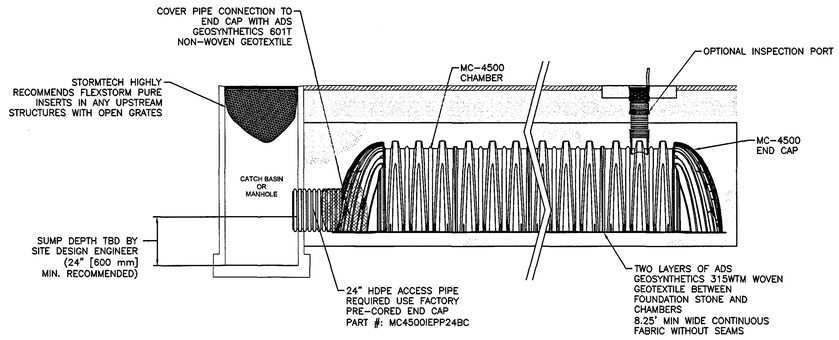

MC-4500 ISOLATOR ROW DETAIL
NTS

INSPECTION & MAINTENANCE

STEP 1) INSPECT ISOLATOR ROW FOR SEDIMENT
- A. INSPECTION PORTS (IF PRESENT)
  - A.1. REMOVE/OPEN LID ON NYLOPLAST INLINE DRAIN
  - A.2. REMOVE AND CLEAN FLEXSTORM FILTER IF INSTALLED
  - A.3. USING A FLASHLIGHT AND STADIA ROD, MEASURE DEPTH OF SEDIMENT AND RECORD ON MAINTENANCE LOG
  - A.4. LOWER A CAMERA INTO ISOLATOR ROW FOR VISUAL INSPECTION OF SEDIMENT LEVELS (OPTIONAL)
  - A.5. IF SEDIMENT IS AT, OR ABOVE, 3" (80 mm) PROCEED TO STEP 2. IF NOT, PROCEED TO STEP 3.
- B. ALL ISOLATOR ROWS
  - B.1. REMOVE COVER FROM STRUCTURE AT UPSTREAM END OF ISOLATOR ROW
  - B.2. USING A FLASHLIGHT, INSPECT DOWN THE ISOLATOR ROW THROUGH OUTLET PIPE
    - i) MIRRORS ON POLES OR CAMERAS MAY BE USED TO AVOID A CONFINED SPACE ENTRY
    - ii) FOLLOW OSHA REGULATIONS FOR CONFINED SPACE ENTRY IF ENTERING MANHOLE
  - B.3. IF SEDIMENT IS AT, OR ABOVE, 3" (80 mm) PROCEED TO STEP 2. IF NOT, PROCEED TO STEP 3.

STEP 2) CLEAN OUT ISOLATOR ROW USING THE JETVAC PROCESS
- A. A FIXED CULVERT CLEANING NOZZLE WITH REAR FACING SPREAD OF 45" (1.1 m) OR MORE IS PREFERRED
- B. APPLY MULTIPLE PASSES OF JETVAC UNTIL BACKFLUSH WATER IS CLEAN
- C. VACUUM STRUCTURE SUMP AS REQUIRED

STEP 3) REPLACE ALL COVERS, GRATES, FILTERS, AND LIDS; RECORD OBSERVATIONS AND ACTIONS.

STEP 4) INSPECT AND CLEAN BASINS AND MANHOLES UPSTREAM OF THE STORMTECH SYSTEM.

NOTES

1. INSPECT EVERY 6 MONTHS DURING THE FIRST YEAR OF OPERATION. ADJUST THE INSPECTION INTERVAL BASED ON PREVIOUS OBSERVATIONS OF SEDIMENT ACCUMULATION AND HIGH WATER ELEVATIONS.
2. CONDUCT JETTING AND VACTORING ANNUALLY OR WHEN INSPECTION SHOWS THAT MAINTENANCE IS NECESSARY.

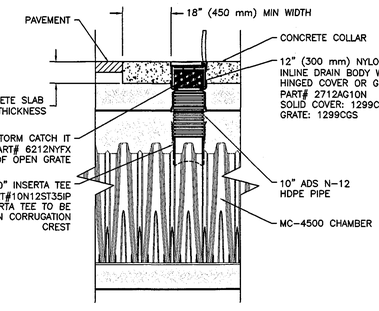

MC-4500 ISOLATOR ROW DETAIL (6)
NOT TO SCALE

N:\PROJECTS\2075-01\CIVIL\DRAWINGS\CURRENT\2075-01 - DETAILS.DWG

JPI

WAIVERS OF TOWN OF BOXBOROUGH ZONING BYLAWS:
4.4003(1) USE REGULATION SCHEDULE
WAIVER TO PERMIT SINGLE-FAMILY AND MULTI-FAMILY ATTACHED RESIDENTIAL USES NOT OTHERWISE PERMITTED IN THE INDUSTRIAL COMMERCIAL DISTRICT (I.E. THE PROPOSED TWO (2) SINGLE FAMILY DWELLINGS AND THE PROPOSED 244 APARTMENT UNITS IN ELEVEN (11) MULTI-FAMILY BUILDINGS, FOR A TOTAL OF 246 UNITS)
4.4033 USE REGULATION SCHEDULE
WAIVER TO PERMIT A USE WHICH IS NOT OTHERWISE ACCESSORY TO INDUSTRIAL-COMMERCIAL USES, I.E., A CLUBHOUSE/RENTAL OFFICE.
5.5002 DIMENSIONAL SCHEDULE
WAIVER OF REQUIREMENT FOR A MAXIMUM FLOOR AREA RATIO OF 0.10.
6.6004 SURFACE, CIRCULATION, AND LANDSCAPING REQUIREMENTS
WAIVER OF REQUIREMENT THAT AUTOMOBILE PARKING SPACES SHALL NOT BE LESS THAN 10 FEET BY 20 FEET, IN ORDER TO ALLOW PARKING SPACE OF 9 FEET BY 18 FEET.
6.6103 MULTIPLE BUILDINGS ON ONE LOT
WAIVER OF REQUIREMENT THAT WHERE MORE THAN ONE BUILDING IS PROPOSED TO BE BUILT UPON A LOT, THE PLAN SHALL BE REVIEWED BY THE PLANNING BOARD REGARDING ADEQUACY OF ACCESS TO BUILDINGS, IN ORDER TO SUBSTITUTE THE PERMISSION FROM THE ZONING BOARD OF APPEALS GRANTED UNDER THIS COMPREHENSIVE PERMIT.
6.6105 PRIVATE/COMMON DRIVEWAYS IN THE, BUSINESS, BUSINESS 1, OFFICE PARK, TOWN CENTER, AND INDUSTRIAL-COMMERCIAL DISTRICTS
WAIVER OF THE REQUIREMENT THAT PRIVATE/COMMON DRIVEWAYS ARE ALLOWED IN THE I-C DISTRICT ONLY BY SPECIAL PERMIT OF THE PLANNING BOARD, IN ORDER TO SUBSTITUTE THE PERMISSION FROM THE ZONING BOARD OF APPEALS UNDER THIS COMPREHENSIVE PERMIT.
7.7004(G) SPECIAL REGULATIONS AQUIFER PROTECTION DISTRICT
WAIVER OF REQUIREMENT THAT THERE BE NO DISPOSAL OF SANITARY WASTE, TO A SUBSURFACE DISPOSAL SYSTEM IN QUANTITIES EXCEEDING 440 GALLONS PER DAY PER ACRE OF AQUIFER PROTECTION DISTRICT CONTAINED WITHIN THE LOT, IN ORDER TO ALLOW QUANTITIES OF UP TO 750 GALLONS PER DAY PER ACRE OF THE LOT IN THE AQUIFER PROTECTION DISTRICT IN THE EVENT RESERVE LEACHING FIELDS ARE USED.
7.7007(1) DESIGN REQUIREMENTS
WAIVER OF REQUIREMENT THAT WHERE A PORTION OF THE SITE IS LOCATED OUTSIDE OF THE AQUIFER PROTECTION DISTRICT, POTENTIAL POLLUTION SOURCES, SUCH AS ON SITE DISPOSAL SYSTEMS, SHOULD BE LOCATED OUTSIDE THE DISTRICT BOUNDARIES, IN ORDER TO ALLOW RESERVE LEACHING FIELD TO BE LOCATED WITHIN THE AQUIFER PROTECTION DISTRICT.
7.7104(G) AND (H) W-DISTRICT USE REGULATIONS
WAIVER OF REQUIREMENTS FOR SPECIAL PERMIT FOR USE IN THE W-DISTRICT, IN ORDER TO SUBSTITUTE APPROVAL UNDER THIS COMPREHENSIVE PERMIT.
7.7106 SUBMITTALS
WAIVER OF REQUIREMENTS FOR SPECIAL PERMIT APPLICATIONS TO BE PREPARED AND SUBMITTED TO THE BOARD OF APPEALS, IN ORDER TO PERMIT ONE COMPREHENSIVE SUBMISSION TO THE BOARD TO BE ACTED ON UNDER G.L. c. 40B, §21.
7.7109 PROCEDURES
WAIVER OF REQUIREMENT FOR SPECIAL PERMIT APPLICATIONS TO BE PREPARED AND SUBMITTED TO THE BOARD OF APPEALS IN ORDER TO PERMIT A SINGLE COMPREHENSIVE PERMIT SUBMISSION TO THE BOARD TO BE ACTED UPON UNDER G.L. C.40B, §21.
7.7200 LANDSCAPING BORDERING THE W-DISTRICT
WAIVER OF REQUIREMENT FOR SPECIAL PERMIT TO PLACE STRUCTURES WITHIN ONE HUNDRED (100') FEET OF THE W-DISTRICT, IN ORDER TO PERMIT CONSTRUCTION OF WARD ROAD AND A FIRE POND WITHIN 100' OF W-DISTRICT.
8.8000 SITE PLAN APPROVAL & DESIGN REVIEW
WAIVER OF REQUIREMENT FOR SITE PLAN REVIEW BY THE PLANNING BOARD FOR THE CONSTRUCTION OF MULTI-FAMILY STRUCTURES AND PARKING AREAS ASSOCIATED WITH MULTI-FAMILY STRUCTURES.
9.9001(2) BUILDING PERMITS
WAIVER OF REQUIREMENT THAT NO BUILDING PERMIT SHALL BE ISSUED BY THE INSPECTOR OF BUILDINGS WITHOUT THE WRITTEN APPROVAL OF A SITE PLAN BY THE PLANNING BOARD.

WAIVERS FROM TOWN OF BOXBOROUGH REGULATIONS FOR THE WETLAND BYLAW:
SECTION 2.5.3.1 PERFORMANCE STANDARDS
WAIVER OF PROHIBITION OF PARKING LOTS, PERMANENT STRUCTURES, AND SANITARY WASTE DISPOSAL SYSTEMS WITHIN ADJACENT LAND RESOURCE AREA, IN ORDER TO ALLOW THE PLACEMENT OF THE PROPOSED SANITARY WASTE DISPOSAL SYSTEM, PARKING LOT, ROAD AND OTHER PERMANENT STRUCTURES WITHIN THE BUFFER ZONE AS SHOWN ON THE PLANS IN ACCORDANCE WITH THE SITE PLAN APPROVED FOR THE PROJECT UNDER THIS COMPREHENSIVE PERMIT.

WAIVERS FROM BOXBOROUGH COMPREHENSIVE PERMIT RULES OF THE ZONING BOARD OF APPEALS:
SECTION 3.02(1) LIST OF REQUESTED EXCEPTIONS
WAIVER OF REQUIREMENT THAT APPLICANT PROVIDES A COMPLETE LIST OF ALL REQUESTED EXCEPTIONS AT THE TIME OF THE INITIAL FILING OF THE APPLICATION IN ORDER TO PERMIT THE LIST TO BE REVISED AS THE PROJECT EVOLVES THROUGH THE HEARING AND APPROVAL PROCESS.

TIMOTHY J. WILLIAMS CIVIL No.43119 REGISTERED PROFESSIONAL ENGINEER
7/9/15
PROFESSIONAL ENGINEER FOR ALLEN & MAJOR ASSOCIATES, INC.

REV	DATE	DESCRIPTION
9.	07/08/2015	ISSUED FOR DEFINITIVE SITE PLAN
8.	06/12/2015	REVISED PER FIRE DEPARTMENT COMMENTS
7.	05/15/2015	ISSUED FOR PERMIT
6.	05/05/2015	ISSUED FOR DEP PERMIT APPROVAL
5.	05/04/2015	REVISED FOR PRICING
4.	03/26/2015	REVISED PER TOWN COMMENTS
3.	03/02/2015	ISSUED FOR MEPA
2.	02/27/2015	REVISED PER TOWN COMMENTS
1.	02/12/2015	ISSUED FOR ZONING BOARD OF APPEALS

APPLICANT:
JPI
3 WEST MAIN STREET, SUITE 203
IRVINGTON, NY 10533

PROJECT:
DEFINITIVE SITE PLAN SET
JEFFERSON AT BEAVER BROOK
BOXBOROUGH, MA

PROJECT NO.	2075-01	DATE:	02-11-2015
SCALE:	AS NOTED	DWG. NAME:	C2075-10
DESIGNED BY:	SJL	CHECKED BY:	CMQ

PREPARED BY:
ALLEN & MAJOR ASSOCIATES, INC.
civil & structural engineering ♦ land surveying
environmental consulting ♦ landscape architecture
www.allenmajor.com
100 COMMERCE WAY
P.O. BOX 2118
WOBURN MA 01888-0118
TEL: (781) 935-6889
FAX: (781) 935-2896
WOBURN, MA ♦ LAKEVILLE, MA ♦ MANCHESTER, NH

THIS DRAWING HAS BEEN PREPARED IN ELECTRONIC FORMAT. CLIENT/CLIENT'S REPRESENTATIVE OR CONSULTANT MAY BE PROVIDED COPIES OF DRAWINGS AND SPECIFICATIONS ON MAGNETIC MEDIA FOR HIS/HER INFORMATION AND USE FOR SPECIFIC APPLICATION TO THIS PROJECT. DUE TO THE POTENTIAL THAT THE MAGNETIC INFORMATION MAY BE MODIFIED UNINTENTIONALLY OR OTHERWISE, ALLEN & MAJOR ASSOCIATES, INC. MAY REMOVE ALL INDICATION OF THE DOCUMENT'S AUTHORSHIP ON THE MAGNETIC MEDIA. PRINTED REPRESENTATIONS OF THE DRAWINGS AND SPECIFICATIONS ISSUED SHALL BE THE ONLY RECORD COPIES OF ALLEN & MAJOR ASSOCIATES, INC.'S WORK PRODUCT.

DRAWING TITLE: DETAILS
SHEET No. D-8

Copyright©2015 Allen & Major Associates, Inc. All Rights Reserved

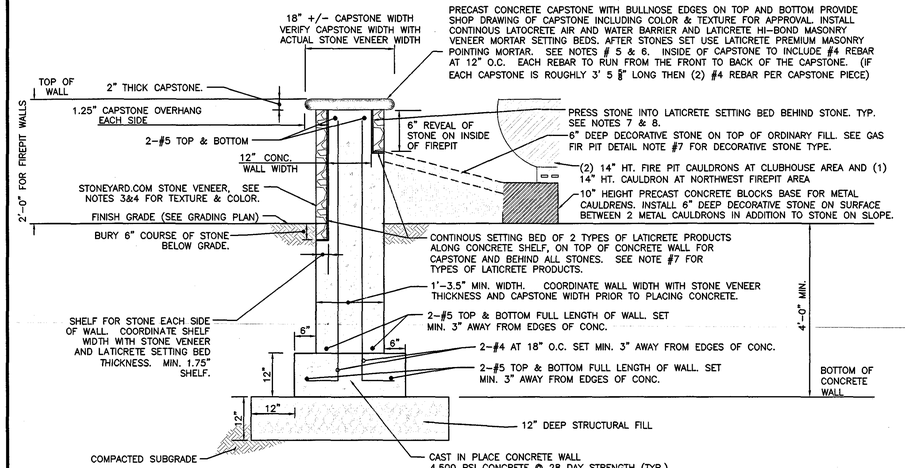

NOTES:
1. INSTALL STONE VENEER PER MANUFACTURERS RECOMMENDATIONS FOR EXTERIOR CONCRETE WALL USE IN MASSACHUSETTS.
2. SEE GAS FIRE PIT DETAIL AND POOL AMENITIES PLAN.
3. FOLLOW MANUFACTURERS & MA STATE FIRE MARSHALLS RECOMMENDATIONS FOR MATERIALS AND SAFE INSTALLATION METHODS NECESSARY FOR USE WITH GAS FIREPIT.
4. STONE VENEER TO BE FROM STONEYARD.COM; 978-742-9800; 2 SPECTACLE POND ROAD; LITTLETON, MA. PROVIDE OWNER WITH SAMPLES OF EACH STYLE AND SHOP DRAWINGS FOR APPROVAL PRIOR TO ORDERING. MULTIPLE OPTIONS FOR STYLE TO INCLUDE: BOSTON BLEND ROUND STONE, VINEYARD GRANITE LEDGESTONE, & BOSTON BLEND LEDGESTONE OR EQUAL.
5. WALLS INCLUDING FOOTING TO BE REVIEWED AS A SHOP DRAWING, AND APPROVED BY STRUCTURAL ENGINEER LICENSED IN THE STATE OF MASSACHUSETTS AND AT CONTRACTOR COST. CONTRACTOR TO INCORPORATE ANY NECESSARY REVISIONS.
6. PRECAST CONCRETE CAPSTONE TO BE FROM NORTHERN DESIGN PRECAST, INC. LOCATED IN LOUDON, NH. 603-783-8989 OR APPROVED EQUAL. PROVIDE OWNER WITH STAMPLES OF EACH STYLE AND SHOP DRAWINGS FOR APPROVAL PRIOR TO ORDERING.
7. DO NOT USE ORDINARY MASONARY MORTAR BEHIND STONE VENEER. AFTER CONCRETE WALL HAS FULLY CURED UTILIZE 2 LATICRETE PRODUCTS BETWEEN STONE VENEER AND CONCRETE WALL. FIRST CLEAN CONCRETE WALL AND MAKE SURE NO LOOSE CONCRETE OR DIRT. THEN APPLY 2 COATS (15-22 MILS) OF LATICRETE AIR AND WATER BARRIER CONTINUOUS ACROSS ENTIRE WALL SIDES, TOP AND SHELF TO RECEIVE STONES. ALLOW TO CURE. THEN APPLY LATICRETE HI-BOND MASONRY VENEER MORTAR (PRODUCT IS A POLYMER FORTIFIED MORTAR) CONTINUOUS ACROSS ENTIRE WALL AND SHELF TO RECEIVE STONES. PRESS STONES VENEER INTO MORTAR. AFTER STONES SET USE LATICRETE PREMIUM MASONRY POINTING MORTAR. PROVIDE SHOP DRAWINGS OF ALL LATICRETE PRODUCTS FOR APPROVAL TO LANDSCAPE ARCHITECT PRIOR TO PURCHASING. INSTALL LATICRETE PRODUCTS AND STONE VENEER PER MANUFACTURERS INSTRUCTIONS.
8. PRESS STONE INTO LATICRETE SETTING BED BEHIND STONE. SETTING BED TO BE 3/4" DEPTH BEFORE COMPRESSION. EACH STONE TO BE HAND TIGHT JOINTS AND NO MORE THAN 1/4" BETWEEN STONES. STAGGER ALL JOINTS. CREATE RANDOM APPEARANCE OF VENEER WITH VARYING STONE SIZES. REMOVE EXCESS MORTAR FROM JOINTS. AFTER STONES ARE SET, APPLY LATICRETE PREMIUM MASONRY POINTING MORTAR TO JOINTS. JOINTS TO HAVE SMOOTH FINISH AND BE CLEAN IN APPEARANCE.

DOUBLE SIDED FREESTANDING STONE VENEER WALL AT FIREPITS (1)
NOT TO SCALE

CONCRETE FIREPIT BOWL

DECORATIVE LOGS & ROUND FIREPIT

NOTES:
1. PROVIDE (3) KINGSMAN (WWW.KINGSMANFIREPLACES.COM) ROUND GAS FIRE PIT & ASSEMBLY FOR NATURAL GAS (MODEL FP2085N). ALSO (3) KINGSMAN ROUND FIREPIT FP2085 FIREPIT ASSEMBLY WHICH INCLUDES: 65,000 BTU BURNER, BURNER PAN, FRAME, HEAT SHIELD, GASKET, & MIXING TUBE ASSEMBLY. ALSO PROVIDE THE FOLLOWING FROM KINGSMAN FOR EACH FIREPIT: BLACK TEXTURED CONCRETE FIRE PIT BOWL FOR FP2085 ROUND FIRE PIT, COVER FOR FIRE PIT (COLOR CHARCOAL), DECORATIVE KEY WAY VALVE KIT, LAVA ROCKS, AND DECORATIVE LOGS. CONTRACTOR AND PLUMBER TO INSTALL FIRE PITS WITH LOCKABLE CLEAR ENCLOSURE THAT CONTAINS NATURAL GAS T-HANDLE GAS SHUTOFF CONTROL, AND A SEPARATE AUTOMATIC GAS SHUT-OFF TIMER. OWNER TO SELECT LOCATION OF THE CONTROLS AND AUTOMATIC GAS SHUT-OFF TIMER WITH SOLENOID VALVE (EITHER WITHIN CLUBHOUSE OR INSIDE TOP OF FIREPIT, FOR PRICING PURPOSES ASSUME THE CONTROLS ARE LOCATED WITHIN THE CLUBHOUSE FOR POOL FIRE PITS AND WITHIN A RESIDENTIAL BUILDING #10 FOR THE NORTHEAST FIREPIT). FINISHES AND COLORS TO BE SELECTED BY OWNER AND A&M DURING THE SHOP DRAWING PROCESS.
2. PROVIDE SHOP DRAWINGS FOR APPROVAL TO PLUMBER, ELECTRICIAN, A&M, & OWNER FOR APPROVAL PRIOR TO ORDERING. CONNECT TO NATURAL GAS AND ELECTRICAL AS APPROPRIATE FOR CONTROLS.
3. INSTALL PER MANUFACTURERS RECOMMENDATIONS, ELECTRICAL & PLUMBING CONSULTANTS RECOMMENDATIONS, & MA STATE FIRE & PLUMBING CODE. CONTRACTOR TO REVIEW COMPLIANCE WITH MA STATE FIRE CODE AND RECEIVE ANY NECESSARY PERMITS & APPROVALS FROM LOCAL AND STATE FIRE OFFICIALS.
4. COORDINATE WITH PLUMBER AND ELECTRICIAN FOR INSTALLATION OF GAS SERVICE TO FIREPIT, GAS AUTOMATIC TIME SHUT-OFF CONTROLS, FLAME CONTROLS, METER, AND INSTALLATION OF CONTROLS AND GAS FROM BUILDING TO FIRE PIT.
5. FIRE PIT WALL CONTRACTORS AND PLUMBING CONTRACTORS TO COORDINATE INSTALLATION OF FIRE PIT WITH INSTALLATION OF FIRE PIT VENEER STONE WALL. STONE VENEER FIRE PIT WALL TO HAVE NECESSARY PROVISIONS & SAFETY FEATURES RECOMMENDED BY MANUFACTURER OF FIRE PIT AND STONE VENEER WALL MANUFACTURER FOR WALL USE AS FIRE PIT.
6. STONE VENEER FOR FIRE PIT WALLS TO BE DOUBLE SIDED. SEE FIRE PIT WALL DETAIL.
7. DECORATIVE STONE TO BE 1"-2" DIA. ROUNDED BEACH PEBBLES. STONE COLOR TO BE GRAY, AND INSTALLED 6" DEEP . ROUNDED BEACH PEBBLES AS SUPPLIED BY: ORGANIC MULCH SUPPLY OF NEW ENGLAND, HUDSON, MA (HUDSON VALLEY RIVER ROCK 1.5"-2"; COLOR GRAY) OR FROM NORTHEAST NURSERY; PEABODY, MA (HUDSON VALLEY 1"-2"; COLOR GRAY) PROVIDE SHOP DRAWING AND SMALL BAG SAMPLE TO LANDSCAPE ARCHITECT FOR APPROVAL PRIOR TO PURCHASE AND INSTALLATION, TYP.
9 INSTALL DECORATIVE STONE ON INSIDE OF FIRE PIT. BOTH ON SURFACE BETWEEN THE CAULDRONS AND ON THE INSIDE SLOPE FROM THE WALLS TO THE CAULDRONS. SLOPE DECORATIVE STONE FROM TOP OF PRECAST BLOCKS UNDER CAULDRON TO BOTTOM OF STONE VENEER (6" BENEATH TOP OF WALL). SEE DOUBLE SIDED STONE VENEER WALL AT FIREPIT DETAIL.

EXTERIOR GAS FIREPITS (2)
NOT TO SCALE

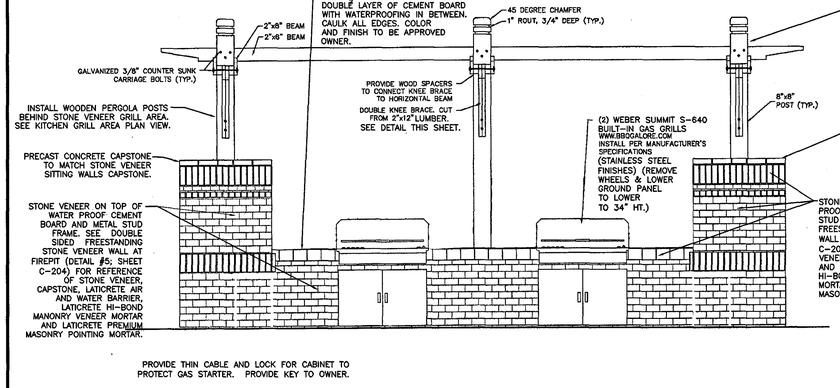

KITCHEN GRILL AREA FRONT ELEVATION

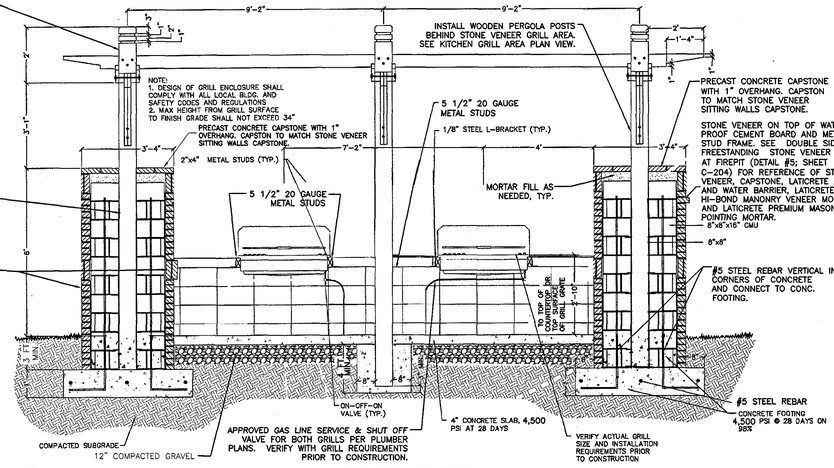

KITCHEN GRILL AREA SECTION A-A

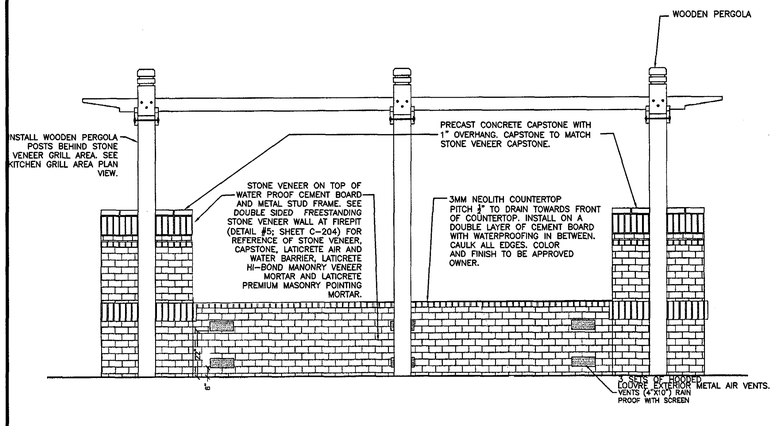

KITCHEN GRILL AREA REAR ELEVATION

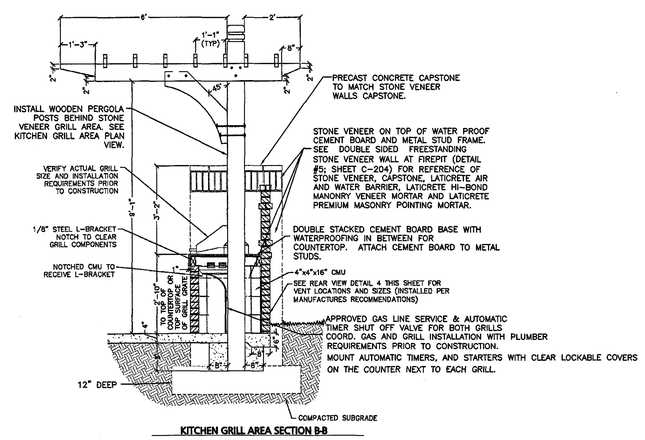

KITCHEN GRILL AREA SECTION B-B

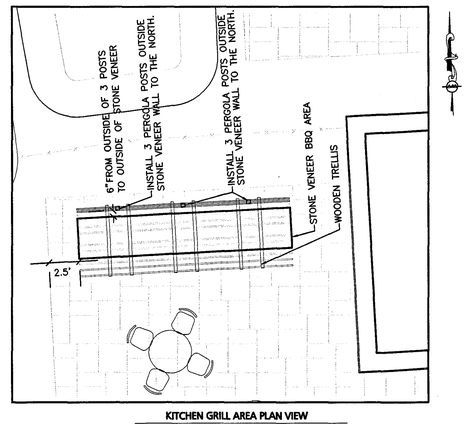

KITCHEN GRILL AREA PLAN VIEW
1"=5'

KITCHEN GRILL AREA (3)
NOT TO SCALE

NOTES:
1. 34" MAX TO TOP OF GRILL SURFACE, CONTROLS, COUNTER TOP, AND ANY AND ALL WORK SURFACES. KITCHEN AREA TO COMPLY WITH BOTH MA AAB & FEDERAL FHA CODES FOR ACCESSIBILITY.
2. PRIOR TO FABRICATION OF COUNTER & INSERT FOR GRILL, CONTRACTOR TO VERIFY INSTALLATION SPECIFICATIONS WITH GRILL AND DOOR MANUFACTURERS.
3. KITCHEN AREA WALL AND COUNTERTOP INSTALLATION TO BE COORDINATED WITH PERGOLA AND PERGOLA FOOTING CONTRACTORS.
4. SEE STONE SITTING WALLS FOR STONE VENEER PRODUCT. PROVIDE OWNER WITH SAMPLE AND SHOP DRAWING FOR APPROVAL.
5. ALL PERGOLA WOOD TO BE KILN DRIED WESTERN RED CEDAR GRADE B. ALL WOOD OF PERGOLA TO BE EITHER LEFT NATURAL OR PAINTED TO MATCH BUILDING PERGOLAS OF CLUBHOUSE. PROVIDE OWNER WITH COLOR SAMPLES FOR FINAL APPROVAL OF COLOR.
6. PERGOLA STRUCTURE & WALLS INCLUDING PERGOLA FASTENERS, AND FOOTING TO BE REVIEWED AS A SHOP DRAWING, AND APPROVED BY STRUCTURAL ENGINEER LICENSED IN THE STATE OF MASSACHUSETTS AND AT CONTRACTOR COST. CONTRACTOR TO INCORPORATE ANY NECESSARY REVISIONS.
7. PITCH ALL CAPSTONES 1/8" PER 12" TO DRAIN.

JPI

WAIVERS OF TOWN OF BOXBOROUGH ZONING BYLAWS:
4.4003(1) USE REGULATION SCHEDULE
WAIVER TO PERMIT SINGLE-FAMILY AND MULTI-FAMILY ATTACHED RESIDENTIAL USES NOT OTHERWISE PERMITTED IN THE INDUSTRIAL COMMERCIAL DISTRICT (I.E. THE PROPOSED TWO (2) SINGLE FAMILY DWELLINGS AND THE PROPOSED 244 APARTMENT UNITS IN ELEVEN (11) MULTI-FAMILY BUILDINGS, FOR A TOTAL OF 246 UNITS)
4.4033 USE REGULATION SCHEDULE
WAIVER TO PERMIT A USE WHICH IS NOT OTHERWISE ACCESSORY TO INDUSTRIAL-COMMERCIAL USES, I.E., A CLUBHOUSE/RENTAL OFFICE.
5.5002 DIMENSIONAL SCHEDULE
WAIVER OF REQUIREMENT FOR A MAXIMUM FLOOR AREA RATIO OF 0.10.
6.6004 SURFACE, CIRCULATION, AND LANDSCAPING REQUIREMENTS
WAIVER OF REQUIREMENT THAT AUTOMOBILE PARKING SPACES SHALL NOT BE LESS THAN 10 FEET BY 20 FEET, IN ORDER TO ALLOW PARKING SPACE OF 9 FEET BY 18 FEET.
6.6103 MULTIPLE BUILDINGS ON ONE LOT
WAIVER OF REQUIREMENT THAT WHERE MORE THAN ONE BUILDING IS PROPOSED TO BE BUILT UPON A LOT, THE PLAN SHALL BE REVIEWED BY THE PLANNING BOARD REGARDING ADEQUACY OF ACCESS TO BUILDINGS, IN ORDER TO SUBSTITUTE THE PERMISSION FROM THE ZONING BOARD OF APPEALS GRANTED UNDER THIS COMPREHENSIVE PERMIT.
6.6109 PRIVATE/COMMON DRIVEWAYS IN THE BUSINESS, BUSINESS 1, OFFICE PARK, TOWN CENTER, AND INDUSTRIAL-COMMERCIAL DISTRICTS
WAIVER OF THE REQUIREMENT THAT PRIVATE/COMMON DRIVEWAYS ARE ALLOWED IN THE IC DISTRICT ONLY BY SPECIAL PERMIT OF THE PLANNING BOARD, IN ORDER TO SUBSTITUTE THE PERMISSION FROM THE ZONING BOARD OF APPEALS UNDER THIS COMPREHENSIVE PERMIT.
7.7004(G) SPECIAL REGULATIONS AQUIFER PROTECTION DISTRICT
WAIVER OF REQUIREMENT THAT THERE BE NO DISPOSAL OF SANITARY WASTE TO A SUBSURFACE DISPOSAL SYSTEM IN QUANTITIES EXCEEDING 440 GALLONS PER DAY PER ACRE OF AQUIFER PROTECTION DISTRICT CONTAINED WITHIN THE LOT, IN ORDER TO ALLOW QUANTITIES OF UP TO 750 GALLONS PER DAY PER ACRE OF THE SITE IN THE AQUIFER PROTECTION DISTRICT IN THE EVENT RESERVE LEACHING FIELDS ARE USED.
7.7007(1) DESIGN REQUIREMENTS
WAIVER OF REQUIREMENT THAT WHERE A PORTION OF THE SITE IS LOCATED OUTSIDE OF THE AQUIFER PROTECTION DISTRICT, POTENTIAL POLLUTION SOURCES, SUCH AS ON SITE DISPOSAL SYSTEMS, SHOULD BE LOCATED OUTSIDE THE DISTRICT BOUNDARIES, IN ORDER TO ALLOW RESERVE LEACHING FIELD TO BE LOCATED WITHIN THE AQUIFER PROTECTION DISTRICT.
7.7104(6) AND (9) W-DISTRICT USE REGULATIONS
WAIVER OF REQUIREMENTS FOR SPECIAL PERMIT FOR USE IN THE W-DISTRICT, IN ORDER TO SUBSTITUTE APPROVAL UNDER THIS COMPREHENSIVE PERMIT.
7.7108 SUBMITTALS
WAIVER OF REQUIREMENTS FOR SPECIAL PERMIT APPLICATIONS TO BE PREPARED AND SUBMITTED TO THE BOARD OF APPEALS, IN ORDER TO PERMIT ONE COMPREHENSIVE SUBMISSION TO THE BOARD TO BE ACTED ON UNDER G.L. C. 40B, §21.
7.7109 PROCEDURES
WAIVER OF REQUIREMENT FOR SPECIAL PERMIT APPLICATIONS TO BE PREPARED AND SUBMITTED TO THE BOARD OF APPEALS IN ORDER TO PERMIT A SINGLE COMPREHENSIVE PERMIT SUBMISSION TO THE BOARD TO BE ACTED UPON UNDER G.L. C.40B, §21.
7.7200 LANDS BORDERING THE W-DISTRICT
WAIVER OF REQUIREMENT FOR SPECIAL PERMIT TO PLACE STRUCTURES WITHIN ONE HUNDRED (100') FEET OF THE W-DISTRICT, IN ORDER TO PERMIT CONSTRUCTION OF WARD ROAD AND A FIRE POND WITHIN 100' OF W-DISTRICT.
8.8000 SITE PLAN APPROVAL & DESIGN REVIEW
WAIVER OF REQUIREMENT FOR SITE PLAN REVIEW BY THE PLANNING BOARD FOR THE CONSTRUCTION OF MULTI-FAMILY STRUCTURES AND PARKING AREA ASSOCIATED WITH MULTI-FAMILY STRUCTURES.
9.9001(2) BUILDING PERMITS
WAIVER OF REQUIREMENT THAT NO BUILDING PERMIT SHALL BE ISSUED BY THE INSPECTOR OF BUILDINGS WITHOUT THE WRITTEN APPROVAL OF A SITE PLAN BY THE PLANNING BOARD.

WAIVERS FROM TOWN OF BOXBOROUGH REGULATIONS FOR THE WETLAND BYLAW:
SECTION 2.5.3.1 PERFORMANCE STANDARDS
WAIVER OF PROHIBITION OF PARKING LOTS, PERMANENT STRUCTURES, AND WASTE DISPOSAL WITHIN THE VEGETATIVE WETLAND ADJACENT RESOURCE AREA, IN ORDER TO ALLOW THE PLACEMENT OF THE PROPOSED SANITARY WASTE DISPOSAL SYSTEM, PARKING, ROAD AND OTHER PERMANENT STRUCTURES WITHIN THE ADJACENT LAND RESOURCE AREA IN ACCORDANCE WITH THE SITE PLAN APPROVED FOR THE PROJECT UNDER THIS COMPREHENSIVE PERMIT.

WAIVERS FROM BOXBOROUGH COMPREHENSIVE PERMIT RULES OF THE ZONING BOARD OF APPEALS:
SECTION 3.02(1) LIST OF REQUESTED EXCEPTIONS
WAIVER OF REQUIREMENT THAT APPLICANT PROVIDES A COMPLETE LIST OF ALL REQUESTED EXCEPTIONS AT THE TIME OF THE INITIAL FILING OF THE APPLICATION IN ORDER TO PERMIT THE LIST TO BE REVISED AS THE PROJECT EVOLVES THROUGH THE HEARING AND APPROVAL PROCESS.

PROFESSIONAL ENGINEER FOR ALLEN & MAJOR ASSOCIATES, INC.

REV	DATE	DESCRIPTION
9.	07/08/2015	ISSUED FOR DEFINITIVE SITE PLAN
8.	06/12/2015	REVISED PER FIRE DEPARTMENT COMMENTS
7.	05/15/2015	ISSUED FOR PERMIT
6.	05/05/2015	ISSUED FOR DEP PERMIT APPROVAL
5.	05/04/2015	REVISED FOR PRICING
4.	03/26/2015	REVISED PER TOWN COMMENTS
3.	03/02/2015	ISSUED FOR MEPA
2.	02/27/2015	REVISED PER TOWN COMMENTS
1.	02/12/2015	ISSUED FOR ZONING BOARD OF APPEALS

APPLICANT:
JPI
3 WEST MAIN STREET, SUITE 203
IRVINGTON, NY 10533

PROJECT:
DEFINITIVE SITE PLAN SET
JEFFERSON AT BEAVER BROOK
BOXBOROUGH, MA

PROJECT NO.	2075-01	DATE:	02-11-2015
SCALE:	AS NOTED	DWG. NAME:	C2075-10
DESIGNED BY:	SJL	CHECKED BY:	CMQ

PREPARED BY:
ALLEN & MAJOR ASSOCIATES, INC.
civil & structural engineering • land surveying
environmental consulting • landscape architecture
www.allenmajor.com
100 COMMERCE WAY
P.O. BOX 8118
WOBURN MA 01888-0118
TEL: (781) 935-6889
FAX: (781) 935-2896
WOBURN, MA • LAKEVILLE, MA • MANCHESTER, NH

THIS DRAWING HAS BEEN PREPARED IN ELECTRONIC FORMAT. CLIENT/CLIENT'S REPRESENTATIVE OR CONSULTANT MAY BE PROVIDED COPIES OF DRAWINGS AND SPECIFICATIONS ON MAGNETIC MEDIA FOR HIS/HER INFORMATION AND USE FOR SPECIFIC APPLICATION TO THIS PROJECT. DUE TO THE POTENTIAL THAT THE MAGNETIC INFORMATION MAY BE MODIFIED UNINTENTIONALLY OR OTHERWISE, ALLEN & MAJOR ASSOCIATES, INC. MAY REMOVE ALL INDICATION OF THE DOCUMENT'S AUTHORSHIP ON THE MAGNETIC MEDIA. PRINTED REPRESENTATIONS OF THE DRAWINGS AND SPECIFICATIONS ISSUED SHALL BE THE ONLY RECORD COPIES OF ALLEN & MAJOR ASSOCIATES, INC.'S WORK PRODUCT.

DRAWING TITLE:	SHEET No.
DETAILS	D-9

Copyright©2015 Allen & Major Associates, Inc. All Rights Reserved

NOTE: CONTRACTOR TO PROVIDE SAMPLE SECTION OF WALL PRIOR TO FULL CONSTRUCTION AT ALL AREAS.

RECONSTRUCTED FIELDSTONE WALL (1)
NOT TO SCALE

NOTES:

1. KENTUCKY STYLE WOODEN 3 RAIL PLANK FENCE FROM PERFECTION FENCE, WOODPOLE WOODWORKERS, OR EQUAL.
2. ALL WOOD TO BE WESTERN RED CEDAR GRADE C OR BETTER.
3. ALL WOOD TO BE PAINTED TO MATCH CLF FENCE FABRIC. COLOR DETERMINED BY OWNER.
4. PROVIDE SHOP DRAWING FOR APPROVAL PRIOR TO PURCHASE. SHOW WOODEN FENCE WITH WITH CLF FENCE FABRIC ATTACHED BY FASTENERS.

SPLIT RAIL FENCING
2 CONDITIONS (WITH AND WITHOUT CHAIN LINK FENCE FABRIC) (2)
NOT TO SCALE

NOTES:

1. EXPANSION JOINT 30'-0" O.C. WITH PREFORMED JOINT FILLER CUT BACK 1/2" AND FILL WITH JOINT SEALER. COLOR TO MATCH.
2. WATER CEMENT RATIO OF 0.42.
3. STAMPED CONCRETE PATTERN, TEXTURE, AND COLOR TO BE FROM SCOFIELD SYSTEMS. THREE PATTERN OPTIONS FOR OWNER SELECTION. COLOR TO BE DETERMINED. SUBMIT SHOP DRAWING FOR FINAL APPROVAL OF PATTERN AND COLOR. PATTERN TO BE EITHER:
   A. ASHLER STONE, RANDOM INTERLOCKING PATTERN. PATTERN ORDER NUMBER 400, A,B,C.
   B. FRACTURED SLATE RATTANWEAVE PATTERN. PATTERN ORDER NUMBER 730 (P,S,F) 404 A, B, & C.
   C. PENNSYLVANIA SLATE PATTERN. USE ALL PATTERN ORDER NUMBERS 800 A & B THRU 814 A & B AND 8150.
   D. ENGLISH YORKSTONE, RANDOM ENTERLOCKING PATTERN. PATTERN ORDER NUMBER

STAMPED AND COLORED CONCRETE (3)
NOT TO SCALE

NOTES:

1. INSTALL STONE VENEER PER MANUFACTURERS RECOMMENDATIONS FOR EXTERIOR CONCRETE WALL USE IN MASSACHUSETTS.
2. FOR SEPARATE DETAIL FOR WALL AT GAS FIRE PITS.
3. STONE VENEER TO BE FROM STONEYARD.COM; 978-742-9800; 2 SPECTACLE POND ROAD; LITTLETON, MA. PROVIDE OWNER WITH SAMPLES OF EACH STYLE AND SHOP DRAWINGS FOR APPROVAL PRIOR TO ORDERING. MULTIPLE OPTIONS FOR STYLE TO INCLUDE: BOSTON BLEND ROUND STONE, VINEYARD GRANITE LEDGESTONE, & BOSTON BLEND LEDGESTONE OR EQUAL.
4. WALLS INCLUDING FOOTING TO BE REVIEWED AS A SHOP DRAWING, AND APPROVED BY STRUCTURAL ENGINEER LICENSED IN THE STATE OF MASSACHUSETTS AND AT CONTRACTOR COST. CONTRACTOR TO INCORPORATE ANY NECESSARY REVISIONS.
5. PRECAST CONCRETE CAPSTONE TO BE FROM NORTHERN DESIGN PRECAST, INC. LOCATED IN LOUDON, NH. 603-783-8989 OR APPROVED EQUAL. PROVIDE OWNER WITH STAMPLES OF EACH STYLE AND SHOP DRAWINGS FOR APPROVAL PRIOR TO ORDERING.
6. DO NOT USE ORDINARY MASONARY MORTAR BEHIND STONE VENEER. AFTER CONCRETE WALL HAS FULLY CURED UTILIZE 2 LATICRETE PRODUCTS BETWEEN STONE VENEER AND CONCRETE WALL. FIRST CLEAN CONCRETE WALL AND MAKE SURE NO LOOSE CONCRETE OR DIRT. THEN APPLY 2 COATS (15-22 MILS) OF LATICRETE AIR AND WATER BARRIER CONTINUOUS ACROSS ENTIRE WALL SIDES, TOP AND SHELF TO RECEIVE STONES. ALLOW TO CURE. THEN APPLY LATICRETE HI-BOND MASONRY VENEER MORTAR (PRODUCT IS A POLYMER FORTIFIED MORTAR) CONTINUOUS ACROSS ENTIRE WALL AND SHELF TO RECEIVE STONES. PRESS STONES VENEER INTO MORTAR. AFTER STONES SET USE LATICRETE PREMIUM MASONRY POINTING MORTAR. PROVIDE SHOP DRAWINGS OF ALL LATICRETE PRODUCTS FOR APPROVAL TO LANDSCAPE ARCHITECT PRIOR TO PURCHASING. INSTALL LATICRETE PRODUCTS AND STONE VENEER PER MANUFACTURERS INSTRUCTIONS.
7. PRESS STONE INTO LATICRETE SETTING BED BEHIND STONE. SETTING BED TO BE 3/4" DEPTH BEFORE COMPRESSION. EACH STONE TO BE HAND TIGHT JOINTS AND NO MORE THAN 1/4" BETWEEN STONES. STAGGER ALL JOINTS. CREATE RANDOM APPEARANCE OF VENEER WITH VARYING STONE SIZES. REMOVE EXCESS MORTAR FROM JOINTS. AFTER STONES ARE SET, APPLY LATICRETE PREMIUM MASONRY POINTING MORTAR TO JOINTS. JOINTS TO HAVE SMOOTH FINISH AND BE CLEAN IN APPEARANCE.

DOUBLE SIDED FREESTANDING VENEER WALLS AT POOL & RECREATIONAL PLAYGROUND (4)
NOT TO SCALE

NOTES:
SEATING BOULDER DEPICTION IS DIAGRAMMATIC IN NATURE. FINAL QUANTITY, LOCATION, AND SPACING TO BE APPROVED BY THE OWNER OR LANDSCAPE ARCHITECT.

SEATING BOULDERS ARE TO BE:

1. APPROXIMATELY 4'x4' AND 3 DEPTH IN SIZE.
2. SUITABLE FOR SEATING WITH FLAT TOPS AND ROUNDED EDGES.
3. OBTAINED FROM EXISTING ONSITE BOULDERS BY CONTRACTOR AND APPROVED FOR INSTALLATION BY OWNER OR LANDSCAPE ARCHITECT.
4. CRADLED DURING TRANSPORT & SETTING OPERATIONS.
5. POSITIONED IN THE FIELD UNDER THE SUPERVISION OF THE LANDSCAPE ARCHITECT OR OWNER.

LANDSCAPE BOULDERS AT DOG PARK AND NORTHEASTERN FIREPIT (5)
NOT TO SCALE

NOTES:

1. FENCE KING COMMERCIAL GRADE ALUMINUM 3-RAIL FENCE OR EQUIVALENT. COLOR TBD BY OWNER.
2. PROVIDE SHOP DRAWING FOR APPROVAL PRIOR TO ORDERING.
3. PROVIDE LOCK AND SPRING LOADED HINGES OR HARDWARE TO MEET SELF CLOSING REQUIREMENT AT POOL AREA. GATE SHALL SWING OUT FROM POOL AREA.
4. PICKET SPACING TO BE SPACED ABSOLUTELY NO MORE THAN 3" CLEAR BETWEEN PICKETS.
5. CONTRACTOR TO VERIFY POOL ENCLOSURE FENCING MEETS STATE AND LOCAL REQUIREMENTS.
6. SUBMIT SHOP DRAWINGS FOR FENCE INCLUDING GATE, LOCK AND HARDWARE

METAL PICKET POOL FENCE AND GATES AT POOL (6)
NOT TO SCALE

COBBLE EDGING CONDITION AT NORTHEASTERN FIRE PIT AREA

STEEL EDGING CONDITION AT DOG PARK

NOTES:

1. SUBMIT SHOP DRAWING OF STONEDUST, AND EDGING.
2. SUBMIT SAMPLE OF COBBLES FOR APPROVAL BY OWNER.
3. USE VIBRATORY PLATE COMPACTOR OR VIBRATION FUNCTION ON ROLLER.
4. PLANT BEDS TO ALSO RECEIVE 18" OF TOPSOIL IN ADDITION TO THE MULCH.
5. STONE DUST TO BE WATERED AND COMPACTED A MIN. OF 3 TIMES TO A MIN. RATE OF 90% COMPACTION.
6. STONEDUST SHTALL BE A PRODUCT OF A STONE CRUSHER. IT SHALL COMPLETELY PASS (100%) A #4 SIEVE AND NOT LESS THAN 40% SHALL PASS A #8 SIEVE.

STONEDUST SURFACE - (2 CONDITIONS)
DOG PARK, & NORTHEASTERN FIRE PIT AREA (7)
NOT TO SCALE

N:\PROJECTS\2075-01\CIVIL\DRAWINGS\CURRENT\2075-01 - DETAILS.DWG

JPI

WAIVERS OF TOWN OF BOXBOROUGH ZONING BYLAWS:
4.4003(1) USE REGULATION SCHEDULE
WAIVER TO PERMIT SINGLE-FAMILY AND MULTI-FAMILY ATTACHED RESIDENTIAL USES NOT OTHERWISE PERMITTED IN THE INDUSTRIAL COMMERCIAL DISTRICT (I.E., THE PROPOSED TWO (2) SINGLE FAMILY DWELLINGS AND THE PROPOSED 244 APARTMENT UNITS IN ELEVEN (11) MULTI-FAMILY BUILDINGS, FOR A TOTAL OF 246 UNITS)
4.4033 USE REGULATION SCHEDULE
WAIVER TO PERMIT A USE WHICH IS NOT OTHERWISE ACCESSORY TO INDUSTRIAL-COMMERCIAL USES, I.E., A CLUBHOUSE/RENTAL OFFICE.
5.5002 DIMENSIONAL SCHEDULE
WAIVER OF REQUIREMENT FOR A MAXIMUM FLOOR AREA RATIO OF 0.10.
6.6004 SURFACE, CIRCULATION, AND LANDSCAPING REQUIREMENTS
WAIVER OF REQUIREMENT THAT AUTOMOBILE PARKING SPACES SHALL NOT BE LESS THAN 10 FEET BY 20 FEET, IN ORDER TO ALLOW PARKING SPACE OF 9 FEET BY 18 FEET.
6.6103 MULTIPLE BUILDINGS ON ONE LOT
WAIVER OF REQUIREMENT THAT WHERE MORE THAN ONE BUILDING IS PROPOSED TO BE BUILT UPON A LOT, THE PLAN SHALL BE REVIEWED BY THE PLANNING BOARD REGARDING ADEQUACY OF ACCESS TO BUILDINGS, IN ORDER TO SUBSTITUTE THE PERMISSION FROM THE ZONING BOARD OF APPEALS GRANTED UNDER THIS COMPREHENSIVE PERMIT.
6.6105 PRIVATE/COMMON DRIVEWAYS IN THE BUSINESS, BUSINESS 1, OFFICE PARK, TOWN CENTER, AND INDUSTRIAL-COMMERCIAL DISTRICTS
WAIVER OF THE REQUIREMENT THAT PRIVATE/COMMON DRIVEWAYS ARE ALLOWED IN THE IC DISTRICT ONLY BY SPECIAL PERMIT OF THE PLANNING BOARD, IN ORDER TO SUBSTITUTE THE PERMISSION FROM THE ZONING BOARD OF APPEALS UNDER THIS COMPREHENSIVE PERMIT.
7.7004(G) SPECIAL REGULATIONS AQUIFER PROTECTION DISTRICT
WAIVER OF REQUIREMENT THAT THERE BE NO DISPOSAL OF SANITARY WASTE TO A SUBSURFACE DISPOSAL SYSTEM IN QUANTITIES EXCEEDING 440 GALLONS PER DAY PER ACRE OF AQUIFER PROTECTION DISTRICT CONTAINED WITHIN THE LOT, IN ORDER TO ALLOW QUANTITIES OF UP TO 750 GALLONS PER DAY PER ACRE OF THE SITE IN THE AQUIFER PROTECTION DISTRICT IN THE EVENT RESERVE LEACHING FIELDS ARE USED.
7.7007(1) DESIGN REQUIREMENTS
WAIVER OF REQUIREMENT THAT WHERE A PORTION OF THE SITE IS LOCATED OUTSIDE OF THE AQUIFER PROTECTION DISTRICT, POTENTIAL POLLUTION SOURCES, SUCH AS ON SITE DISPOSAL SYSTEMS, SHOULD BE LOCATED OUTSIDE THE DISTRICT BOUNDARIES, IN ORDER TO ALLOW RESERVE LEACHING FIELD TO BE LOCATED WITHIN THE AQUIFER PROTECTION DISTRICT.
7.7104(G) AND (H) W-DISTRICT USE REGULATIONS
WAIVER OF REQUIREMENTS FOR SPECIAL PERMIT FOR USE IN THE W-DISTRICT, IN ORDER TO SUBSTITUTE APPROVAL UNDER THIS COMPREHENSIVE PERMIT.
7.7106 SUBMITTALS
WAIVER OF REQUIREMENTS FOR SPECIAL PERMIT APPLICATIONS TO BE PREPARED AND SUBMITTED TO THE BOARD OF APPEALS, IN ORDER TO PERMIT ONE COMPREHENSIVE SUBMISSION TO THE BOARD TO BE ACTED ON UNDER G.L. C. 40B, §21.
7.7109 PROCEDURES
WAIVER OF REQUIREMENT FOR SPECIAL PERMIT APPLICATIONS TO BE PREPARED AND SUBMITTED TO THE BOARD OF APPEALS IN ORDER TO PERMIT A SINGLE COMPREHENSIVE PERMIT SUBMISSION TO THE BOARD TO BE ACTED UPON UNDER G.L. C.40B, §21.
7.7200 LANDS BORDERING THE W-DISTRICT
WAIVER OF REQUIREMENT FOR SPECIAL PERMIT TO PLACE STRUCTURES WITHIN ONE HUNDRED (100') FEET OF THE W-DISTRICT, IN ORDER TO PERMIT CONSTRUCTION OF WARD ROAD AND A FIRE POND WITHIN 100' OF W-DISTRICT.
8.8000 SITE PLAN APPROVAL & DESIGN REVIEW
WAIVER OF REQUIREMENT FOR SITE PLAN REVIEW BY THE PLANNING BOARD FOR THE CONSTRUCTION OF MULTI-FAMILY STRUCTURES AND PARKING AREAS ASSOCIATED WITH MULTI-FAMILY STRUCTURES.
9.9001(2) BUILDING PERMITS
WAIVER OF REQUIREMENT THAT NO BUILDING PERMIT SHALL BE ISSUED BY THE INSPECTOR OF BUILDINGS WITHOUT THE WRITTEN APPROVAL OF A SITE PLAN BY THE PLANNING BOARD.

WAIVERS FROM TOWN OF BOXBOROUGH REGULATIONS FOR THE WETLAND BYLAW:
SECTION 2.5.3.1 PERFORMANCE STANDARDS
WAIVER OF PROHIBITION OF PARKING LOTS, PERMANENT STRUCTURES, AND SANITARY WASTE DISPOSAL SYSTEMS WITHIN ADJACENT LAND RESOURCE AREA, IN ORDER TO ALLOW THE PLACEMENT OF THE PROPOSED SANITARY WASTE DISPOSAL SYSTEM, PARKING LOT, ROAD AND OTHER PERMANENT STRUCTURES WITHIN THE ADJACENT LAND RESOURCE AREA IN ACCORDANCE WITH THE SITE PLAN APPROVED FOR THE PROJECT UNDER THIS COMPREHENSIVE PERMIT.

WAIVERS FROM BOXBOROUGH COMPREHENSIVE PERMIT RULES OF THE ZONING BOARD OF APPEALS:
SECTION 3.02(I) LIST OF REQUESTED EXCEPTIONS
WAIVER OF REQUIREMENT THAT APPLICANT PROVIDES A COMPLETE LIST OF ALL REQUESTED EXCEPTIONS AT THE TIME OF THE INITIAL FILING OF THE APPLICATION IN ORDER TO PERMIT THE LIST TO BE REVISED AS THE PROJECT EVOLVES THROUGH THE HEARING AND APPROVAL PROCESS.

TIMOTHY J. WILLIAMS CIVIL No.43119 REGISTERED PROFESSIONAL ENGINEER — COMMONWEALTH OF MASSACHUSETTS
7/8/15

PROFESSIONAL ENGINEER FOR ALLEN & MAJOR ASSOCIATES, INC.

REV	DATE	DESCRIPTION
9.	07/08/2015	ISSUED FOR DEFINITIVE SITE PLAN
8.	06/12/2015	REVISED PER FIRE DEPARTMENT COMMENTS
7.	05/15/2015	ISSUED FOR PERMIT
6.	05/05/2015	ISSUED FOR DEP PERMIT APPROVAL
5.	05/04/2015	REVISED FOR PRICING
4.	03/26/2015	REVISED PER TOWN COMMENTS
3.	03/02/2015	ISSUED FOR MEPA
2.	02/27/2015	REVISED PER TOWN COMMENTS
1.	02/12/2015	ISSUED FOR ZONING BOARD OF APPEALS

APPLICANT:
JPI
3 WEST MAIN STREET, SUITE 203
IRVINGTON, NY 10533

PROJECT:
DEFINITIVE SITE PLAN SET
JEFFERSON AT BEAVER BROOK
BOXBOROUGH, MA

PROJECT NO.	2075-01	DATE:	02-11-2015
SCALE:	AS NOTED	DWG. NAME:	C2075-10
DESIGNED BY:	SJL	CHECKED BY:	CMQ

PREPARED BY:

ALLEN & MAJOR ASSOCIATES, INC.
civil & structural engineering ◆ land surveying
environmental consulting ◆ landscape architecture
www.allenmajor.com
100 COMMERCE WAY
P.O. BOX 2118
WOBURN MA 01888-0118
TEL: (781) 935-6889
FAX: (781) 935-2896
WOBURN, MA ◆ LAKEVILLE, MA ◆ MANCHESTER, NH

THIS DRAWING HAS BEEN PREPARED IN ELECTRONIC FORMAT. CLIENT/CLIENT'S REPRESENTATIVE OR CONSULTANT MAY BE PROVIDED COPIES OF DRAWINGS AND SPECIFICATIONS ON MAGNETIC MEDIA FOR HIS/HER INFORMATION AND USE FOR SPECIFIC APPLICATION TO THIS PROJECT. DUE TO THE POTENTIAL THAT THE MAGNETIC INFORMATION MAY BE MODIFIED UNINTENTIONALLY OR OTHERWISE, ALLEN & MAJOR ASSOCIATES, INC. MAY REMOVE ALL INDICATION OF THE DOCUMENT'S AUTHORSHIP ON THE MAGNETIC MEDIA. PRINTED REPRESENTATIONS OF THE DRAWINGS AND SPECIFICATIONS ISSUED SHALL BE THE ONLY RECORD COPIES OF ALLEN & MAJOR ASSOCIATES, INC.'S WORK PRODUCT.

DRAWING TITLE: DETAILS
SHEET No. D-10

Copyright©2015 Allen & Major Associates, Inc. All Rights Reserved

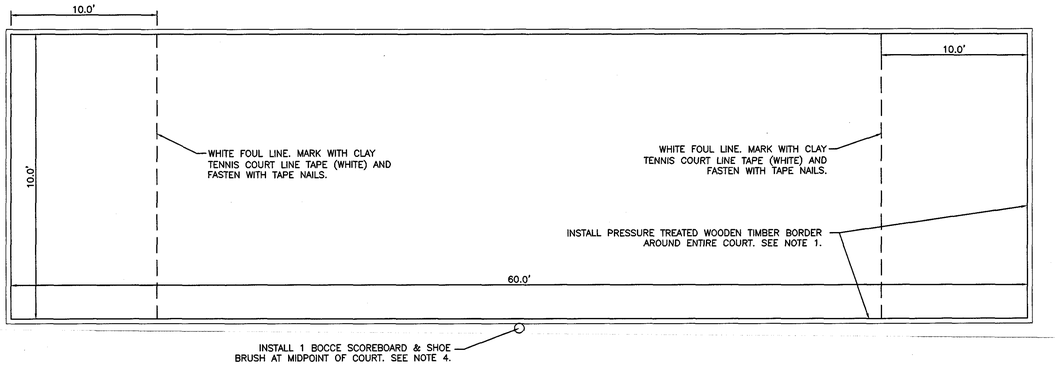

NOTES:

1. INSTALL 6" X 6" X 8' PRESSURE TREATED WOODEN TIMBER WALL ALONG ENTIRE PERIMETER OF BOCCE COURT. INSTALL TIMBERS ON A 6" GRAVEL BASE AROUND ENTIRE PERIMETER OF BOCCE COURT. UNIFY THE STRUCTURE AND PROVIDE STABILITY WITH TIE-BACK TIMBERS (DEADMAN) RUNNING PERPENDICULAR INTO EARTH AND ANCHOR ALL TIMBERS WITH #4 REBAR & TIMBER WALL SCREWS THRU ALL LEVELS OF THE TIMBER WALL. WOODEN TIMBERS TO BE INSTALLED WITH 6" REVEAL ON INSIDE OF COURT AND BE BURIED A MIN. OF 12" DEEP BELOW FINISH GRADE OF BOCCE COURT. TIMBER WALLS TO BE FLUSH WITH LAWN AREA ON OUTSIDE OF BOCCE COURT.
2. SEE BOCCE COURT SURFACE DETAIL COURT SURFACE TO BE FLAT. THE SURFACE IS TO NOT VARY BY MORE THAN 1/8" PER 10' AS MEASURED IN ANY DIRECTION. DURNING INSTALLATION, WATER SURFACE AND COMPACT WITH 400 TO 1,200 LB ROLLER UNTIL FIRMNESS IS ACHIEVED.
3. BOCCE BALLS & COURT MAINTENANCE EQUIPMENT INCLUDING BUT NOT LIMITED TO: BOCCE BALLS, HAND ROLLERS, SCARIFIER RAKE, BROOM, TO MAINTAIN COURTS ARE TO BE PROVIDED BY OWNER.
4. INSTALL 1 FIXED BOCCE SCOREBOARD ON 48" HT. WOODEN POST. SCOREBOARD TO BE UV RESISTANT AND WEATHERPROOF. ALSO PROVIDE 1 EXTRA SET OF EACH COLORED ROUNDED SCORE INDICATORS FOR BOARD. SCOREBOARD TO BE FROM "LOVE ONE" OR EQUAL; 404-804-6816. WWW.TENNISSCOREBOARDS.COM. INSTALL 1 SHOE BRUSH ON WOODEN TIMBERS. SHOE BRUSH FROM WWW.BOCCEMON.CO; 1-360-224-2909 OR EQUAL.

BOCCE COURT (1)
NOT TO SCALE

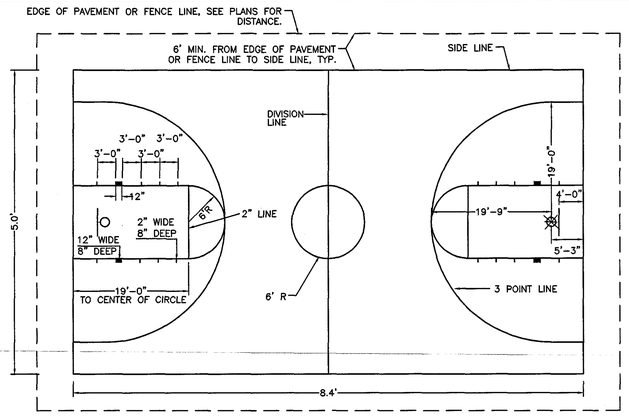

NOTES:
1. THE COLOR OF THE LANE MARKS & NEUTRAL ZONE MARKS SHALL CONTRAST WITH THE COLOR OF THE BOUNDING LINES. THE MIDCOURT MARKS SHALL BE THE SAME COLOR AS THE BOUNDARY LINES SUBMIT SHOP DRAWING . FOR COLOR OPTIONS FOR APPROVAL.
2. OPTIMUM LENGTH 84' INSIDE. ALL LINES SHALL BE 2" WIDE (NEUTRAL ZONE EXCLUDED). END LINES AND SIDELINES SHALL BE A MINIMUM OF 2" IN WIDTH. ALL LINES TO BE WHITE.

BASKETBALL COURT LAYOUT (2)
NOT TO SCALE

HAR-TRU BOCCE SURFACE GRADATION	
US SIEVE#	% PASSING BY WEIGHT
#16	0-5
#20	12-25
#30	12-25
#70	25-40
#100	2-9
PAN	23-33

CRUSHED STONE GRADATION	
US SIEVE#	% PASSING BY WEIGHT
3/8"	100
#4	80-100
#100	10-30
#200	2-10

CRUSHED STONE BASE GRADATION	
US SIEVE#	% PASSING BY WEIGHT
3/8"	100
#4	80-100
#100	10-30
#200	2-10

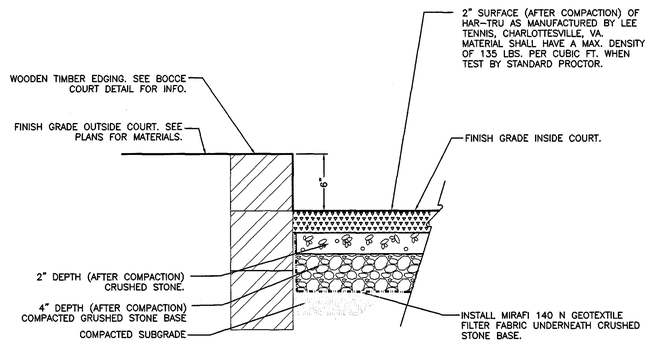

NOTES:
1. EACH COURSE OF MATERIAL COURT SURFACE TO BE LAID FLAT AND NOT VARY BY MORE THAN 1/8" PER 10' AS MEASURED IN ANY DIRECTION. DURNING INSTALLATION, WATER SURFACE AND COMPACT AT 90% COMPACTION UNTIL 90% COMPACTION OF EACH MATERIAL IS ACHIEVED. FOR HAR-TRU SURFACE USE 400 TO 1,200 LB. ROLLER.
2. PROVIDE SHOP DRAWINGS OF EACH MATERIAL FOR APPROVAL.

BOCCE COURT SURFACE (3)
NOT TO SCALE

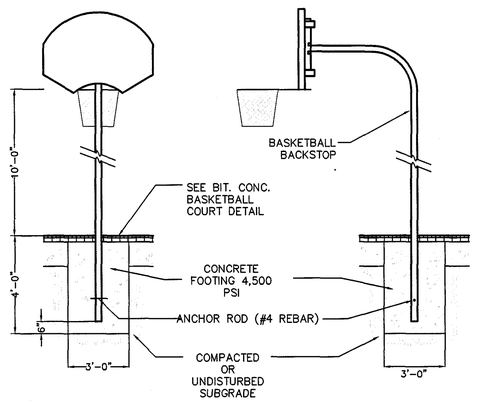

NOTES:
1. BASKETBALL HOOPS TO BE BY BISON, INC: 4 1/2" O.D. HEAVY DUTY GOOSENECK, ALUMINUM BACKBOARD (PR55 PACKAGE WITH NYLON NET) PROVIDE SHOP DRAWINGS FOR APPROVAL PRIOR TO ORDERING.
2. BASKETBALL NETS TO BE BY BISON, INC. OR EQUAL.
3. INSTALL PER MANUFACTURERS RECOMMENDATIONS.

BASKETBALL BACKSTOP & FOOTING (4)
NOT TO SCALE

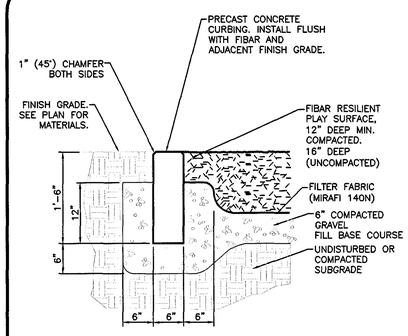

PRECAST CONCRETE EDGING AND PLAYGROUND FIBAR (5)
NOT TO SCALE

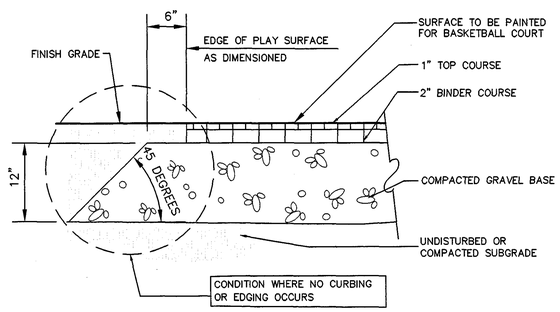

BIT. CONCRETE BASKETBALL COURT (6)
NOT TO SCALE

WAIVERS OF TOWN OF BOXBOROUGH ZONING BYLAWS:
4.4003(1) USE REGULATION SCHEDULE
WAIVER TO PERMIT SINGLE-FAMILY AND MULTI-FAMILY ATTACHED RESIDENTIAL USES NOT OTHERWISE PERMITTED IN THE INDUSTRIAL COMMERCIAL DISTRICT (I.E., THE PROPOSED TWO (2) SINGLE FAMILY DWELLINGS AND THE PROPOSED 244 APARTMENT UNITS IN ELEVEN (11) MULTI-FAMILY BUILDINGS, FOR A TOTAL OF 246 UNITS)
4.4033 USE REGULATION SCHEDULE
WAIVER TO PERMIT A USE WHICH IS NOT OTHERWISE ACCESSORY TO INDUSTRIAL-COMMERCIAL USES, I.E., A CLUBHOUSE/RENTAL OFFICE.
5.5002 DIMENSIONAL SCHEDULE
WAIVER OF REQUIREMENT FOR A MAXIMUM FLOOR AREA RATIO OF 0.10.
6.6004 SURFACE, CIRCULATION, AND LANDSCAPING REQUIREMENTS
WAIVER OF REQUIREMENT THAT AUTOMOBILE PARKING SPACES SHALL NOT BE LESS THAN 10 FEET BY 20 FEET, IN ORDER TO ALLOW PARKING SPACE OF 9 FEET BY 18 FEET.
6.6103 MULTIPLE BUILDINGS ON ONE LOT
WAIVER OF REQUIREMENT THAT WHERE MORE THAN ONE BUILDING IS PROPOSED TO BE BUILT UPON A LOT, THE PLAN SHALL BE REVIEWED BY THE PLANNING BOARD REGARDING ADEQUACY OF ACCESS TO BUILDINGS, IN ORDER TO SUBSTITUTE THE PERMISSION FROM THE ZONING BOARD OF APPEALS GRANTED UNDER THIS COMPREHENSIVE PERMIT.
6.6105 PRIVATE/COMMON DRIVEWAYS IN THE BUSINESS, BUSINESS 1, OFFICE PARK, TOWN CENTER, AND INDUSTRIAL-COMMERCIAL DISTRICTS
WAIVER OF THE REQUIREMENT THAT PRIVATE/COMMON DRIVEWAYS ARE ALLOWED IN THE IC DISTRICT ONLY BY SPECIAL PERMIT OF THE PLANNING BOARD, IN ORDER TO SUBSTITUTE THE PERMISSION FROM THE ZONING BOARD OF APPEALS UNDER THIS COMPREHENSIVE PERMIT.
7.7004(6) SPECIAL REGULATIONS AQUIFER PROTECTION DISTRICT
WAIVER OF REQUIREMENT THAT THERE BE NO DISPOSAL OF SANITARY WASTE TO A SUBSURFACE DISPOSAL SYSTEM IN QUANTITIES EXCEEDING 440 GALLONS PER DAY PER ACRE OF AQUIFER PROTECTION DISTRICT CONTAINED WITHIN THE LOT, IN ORDER TO ALLOW QUANTITIES OF UP TO 750 GALLONS PER DAY PER ACRE OF THE SITE IN THE AQUIFER PROTECTION DISTRICT IN THE EVENT RESERVE LEACHING FIELDS ARE USED.
7.7007(1) DESIGN REQUIREMENTS
WAIVER OF REQUIREMENT THAT WHERE A PORTION OF THE SITE IS LOCATED OUTSIDE OF THE AQUIFER PROTECTION DISTRICT, POTENTIAL POLLUTION SOURCES, SUCH AS ON SITE DISPOSAL SYSTEMS, SHOULD BE LOCATED OUTSIDE THE DISTRICT BOUNDARIES, IN ORDER TO ALLOW RESERVE LEACHING FIELD TO BE LOCATED WITHIN THE AQUIFER PROTECTION DISTRICT.
7.7104(6) AND (9) W-DISTRICT USE REGULATIONS
WAIVER OF REQUIREMENTS FOR SPECIAL PERMIT FOR USE IN THE W-DISTRICT, IN ORDER TO SUBSTITUTE APPROVAL UNDER THIS COMPREHENSIVE PERMIT.
7.7106 SUBMITTALS
WAIVER OF REQUIREMENTS FOR SPECIAL PERMIT APPLICATIONS TO BE PREPARED AND SUBMITTED TO THE BOARD OF APPEALS IN ORDER TO PERMIT ONE COMPREHENSIVE SUBMISSION TO THE BOARD TO BE ACTED ON UNDER G.L. C. 40B, §21.
7.7109 PROCEDURES
WAIVER OF REQUIREMENT FOR SPECIAL PERMIT APPLICATIONS TO BE PREPARED AND SUBMITTED TO THE BOARD OF APPEALS IN ORDER TO PERMIT A SINGLE COMPREHENSIVE PERMIT SUBMISSION TO THE BOARD TO BE ACTED UPON UNDER G.L. C.40B, §21.
7.7120 LANDS BORDERING THE W-DISTRICT
WAIVER OF REQUIREMENT FOR SPECIAL PERMIT TO PLACE STRUCTURES WITHIN ONE HUNDRED (100') FEET OF THE W-DISTRICT, IN ORDER TO PERMIT CONSTRUCTION OF WARD ROAD AND A FIRE POND WITHIN 100' OF W-DISTRICT.
8.8000 SITE PLAN APPROVAL & DESIGN REVIEW
WAIVER OF REQUIREMENT FOR SITE PLAN REVIEW BY THE PLANNING BOARD FOR THE CONSTRUCTION OF MULTI-FAMILY STRUCTURES AND PARKING AREAS ASSOCIATED WITH MULTI-FAMILY STRUCTURES.
9.9001(2) BUILDING PERMITS
WAIVER OF REQUIREMENT THAT NO BUILDING PERMIT SHALL BE ISSUED BY THE INSPECTOR OF BUILDINGS WITHOUT THE WRITTEN APPROVAL OF A SITE PLAN BY THE PLANNING BOARD.

WAIVERS FROM TOWN OF BOXBOROUGH REGULATIONS FOR THE WETLAND BYLAW:
SECTION 2.5.3.1 PERFORMANCE STANDARDS
WAIVER OF PROHIBITION OF PARKING LOTS, PERMANENT STRUCTURES, AND SANITARY WASTE DISPOSAL SYSTEMS WITHIN ADJACENT LAND RESOURCE AREA, IN ORDER TO ALLOW THE REPLACEMENT OF THE PROPOSED SANITARY WASTE DISPOSAL SYSTEM, ALLOW PARKING LOT, ROAD AND OTHER PERMANENT STRUCTURES WITHIN THE ADJACENT LAND RESOURCE AREA IN ACCORDANCE WITH THE SITE PLAN APPROVED FOR THE PROJECT UNDER THIS COMPREHENSIVE PERMIT.

WAIVERS FROM BOXBOROUGH, COMPREHENSIVE PERMIT RULES OF THE ZONING BOARD OF APPEALS:
SECTION 3.02(I) LIST OF REQUESTED EXCEPTIONS
WAIVER OF REQUIREMENT THAT APPLICANT PROVIDES A COMPLETE LIST OF ALL REQUESTED EXCEPTIONS AT THE TIME OF THE INITIAL FILING OF THE APPLICATION, RECOGNIZING THAT THE LIST MAY BE REVISED AS THE PROJECT EVOLVES THROUGH THE HEARING AND APPROVAL PROCESS.

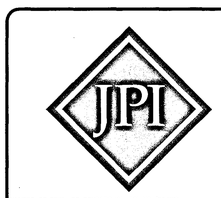

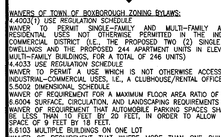

PROFESSIONAL ENGINEER FOR ALLEN & MAJOR ASSOCIATES, INC.

REV	DATE	DESCRIPTION
9.	07/08/2015	ISSUED FOR DEFINITIVE SITE PLAN
8.	06/12/2015	REVISED PER FIRE DEPARTMENT COMMENTS
7.	05/15/2015	ISSUED FOR PERMIT
6.	05/05/2015	ISSUED FOR DEP PERMIT APPROVAL
5.	05/04/2015	REVISED FOR PRICING
4.	03/26/2015	REVISED PER TOWN COMMENTS
3.	03/02/2015	ISSUED FOR MEPA
2.	02/27/2015	REVISED PER TOWN COMMENTS
1.	02/12/2015	ISSUED FOR ZONING BOARD OF APPEALS

APPLICANT:
JPI
3 WEST MAIN STREET, SUITE 203
IRVINGTON, NY 10533

PROJECT:
DEFINITIVE SITE PLAN SET
JEFFERSON AT BEAVER BROOK
BOXBOROUGH, MA

PROJECT NO.	2075-01	DATE:	02-11-2015
SCALE:	AS NOTED	DWG. NAME:	C2075-10
DESIGNED BY:	SJL	CHECKED BY:	CMQ

PREPARED BY:
ALLEN & MAJOR ASSOCIATES, INC.
civil & structural engineering • land surveying
environmental consulting • landscape architecture
www.allenmajor.com
100 COMMERCE WAY
P.O. BOX 2118
WOBURN MA 01888-0118
TEL: (781) 935-6889
FAX: (781) 935-2896
WOBURN, MA • LAKEVILLE, MA • MANCHESTER, NH

THIS DRAWING HAS BEEN PREPARED IN ELECTRONIC FORMAT. CLIENT/CLIENTS REPRESENTATIVE OR CONSULTANT MAY BE PROVIDED COPIES OF DRAWINGS AND SPECIFICATIONS ON MAGNETIC MEDIA FOR HIS/HER INFORMATION AND USE FOR SPECIFIC APPLICATION TO THIS PROJECT. DUE TO THE POTENTIAL THAT THE MAGNETIC INFORMATION MAY BE MODIFIED UNINTENTIONALLY OR OTHERWISE, ALLEN & MAJOR ASSOCIATES, INC. MAY REMOVE ALL INDICATION OF THE DOCUMENTS AUTHORSHIP ON THE MAGNETIC MEDIA. PRINTED REPRESENTATIONS OF THE DRAWINGS AND SPECIFICATIONS ISSUED SHALL BE THE ONLY RECORD COPIES OF ALLEN & MAJOR ASSOCIATES, INC.'S WORK PRODUCT.

DRAWING TITLE: DETAILS
SHEET No. D-11

Copyright©2015 Allen & Major Associates, Inc. All Rights Reserved

N:\PROJECTS\2075-01\CIVIL\DRAWINGS\CURRENT\2075-01 - DETAILS.DWG