Laurence B. White
14-005-000

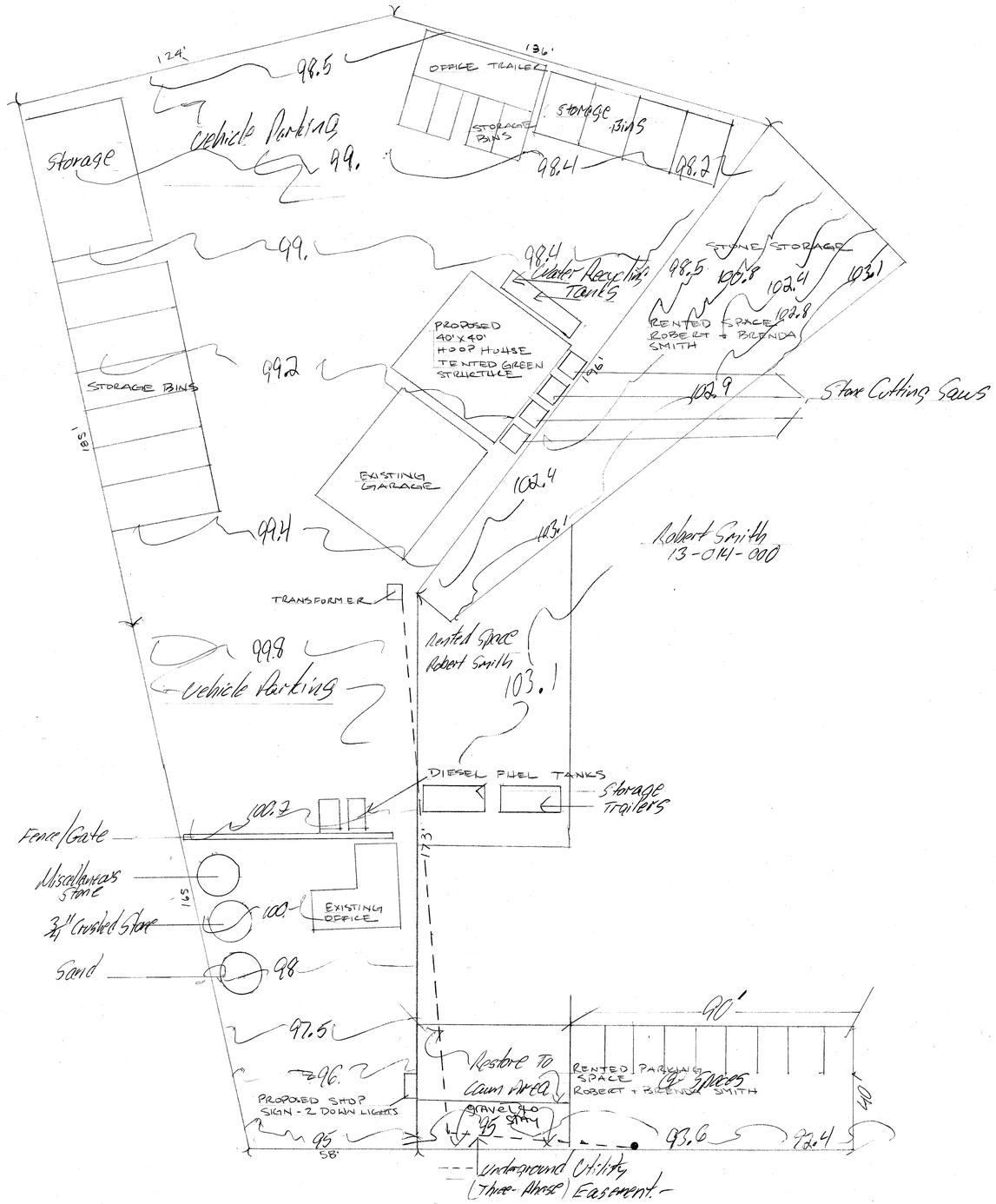

Site Plan

Lawn Barber
1034 Massachusetts Ave
Boxborough, MA 01719

August 10, 2015

Scale 1"=20'-0"

Alden Landscape Design
240 Concord Road
Lincoln, MA 01773
781-799-2926
aldenlandscape@gmail.com

PB00260R4
Freestanding Building

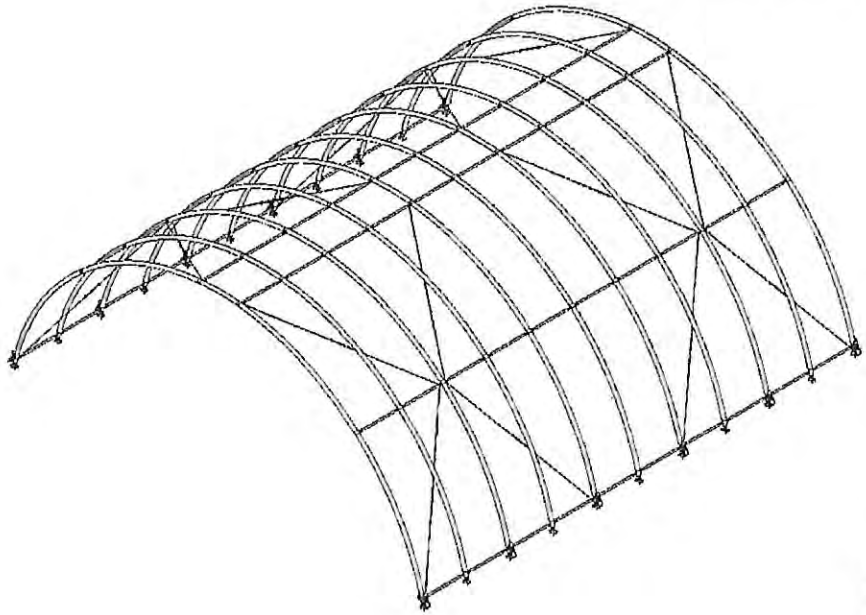

ISOMETRIC

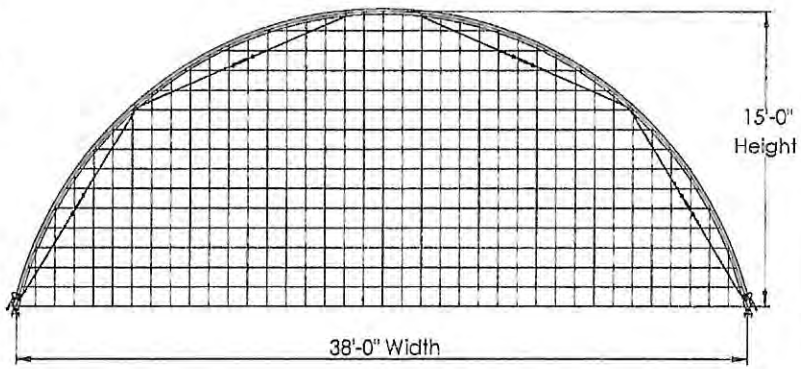

FRONT
Grid Represents 12" Squares

Shelter Information			
Width (Center - Center)	38'-0"	Purlin Tubing & # of Runs	105118 Purlin, 6 Runs
Height (Ground - Peak)	15'-0"	Cover Info	12.5oz, Skylight
Length (Center - Center)	40'-0"	Cover Conduit Tubing	1.66" Round
Sidewall Height	N/A	End Wall Door	N/A
Rafter Spacing	4'	End Wall Tubing	N/A
Rafter Tubing	3.50" Round	End Panel Info	N/A

Important: Read the instruction manual and the additional comments on the last page of this document before you begin construction.

CONTENT GUIDE
Only Applicable Pages Are Included

A	Title
B	Front Profile
C	Side Profile
D	Connection Call-Out
E	Connection Details
F	End Framing
G	Rafter Pipe Details
H	Cover and End Panel Details
I	New or Special Components
J	B.O.M.
K	Information

Drawn By: JR
Creation Date: 2/6/2006
Last Revision Date: 2/10/2006
Shelter Sku Number: PB00260R4
Shelter Dimensions: 38'W x 15'H x 40'L
Shelter Description: Freestanding Building
Engineering Services & Products Co.
Design Approval
Manger Approval
Engineering Approval

A1-1.0

FRONT PROFILE

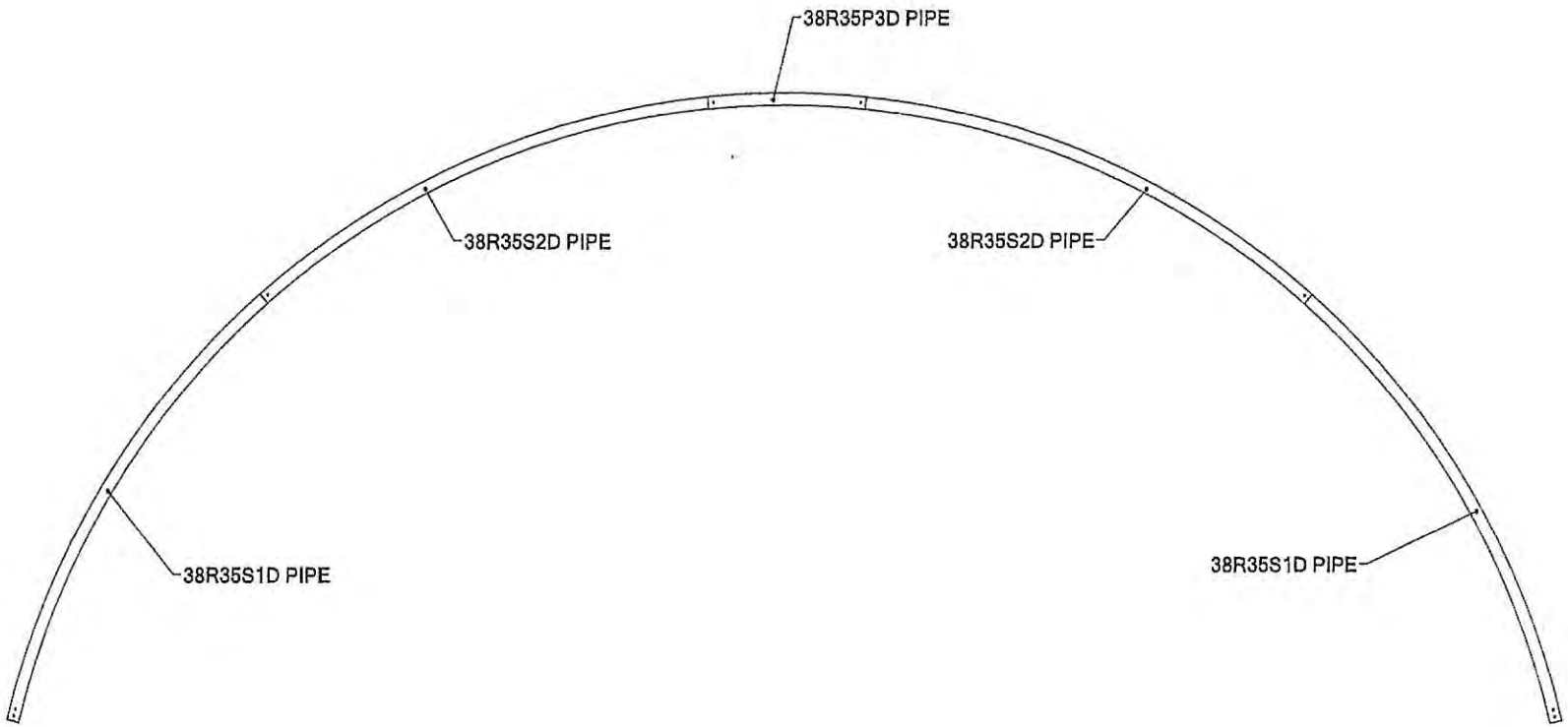

Drawn By	JR
Creation Date	2/6/2006
Last Revision Date	2/10/2006
Shelter Sku Number	PB00260R4
Shelter Dimensions	38'W x 15'H x 40'L
Shelter Description	Freestanding Building

ClearSpan

Engineering Services & Products Co.

Design Approval

Manger Approval

Engineering Approval

B1-1.0

SIDE PROFILE

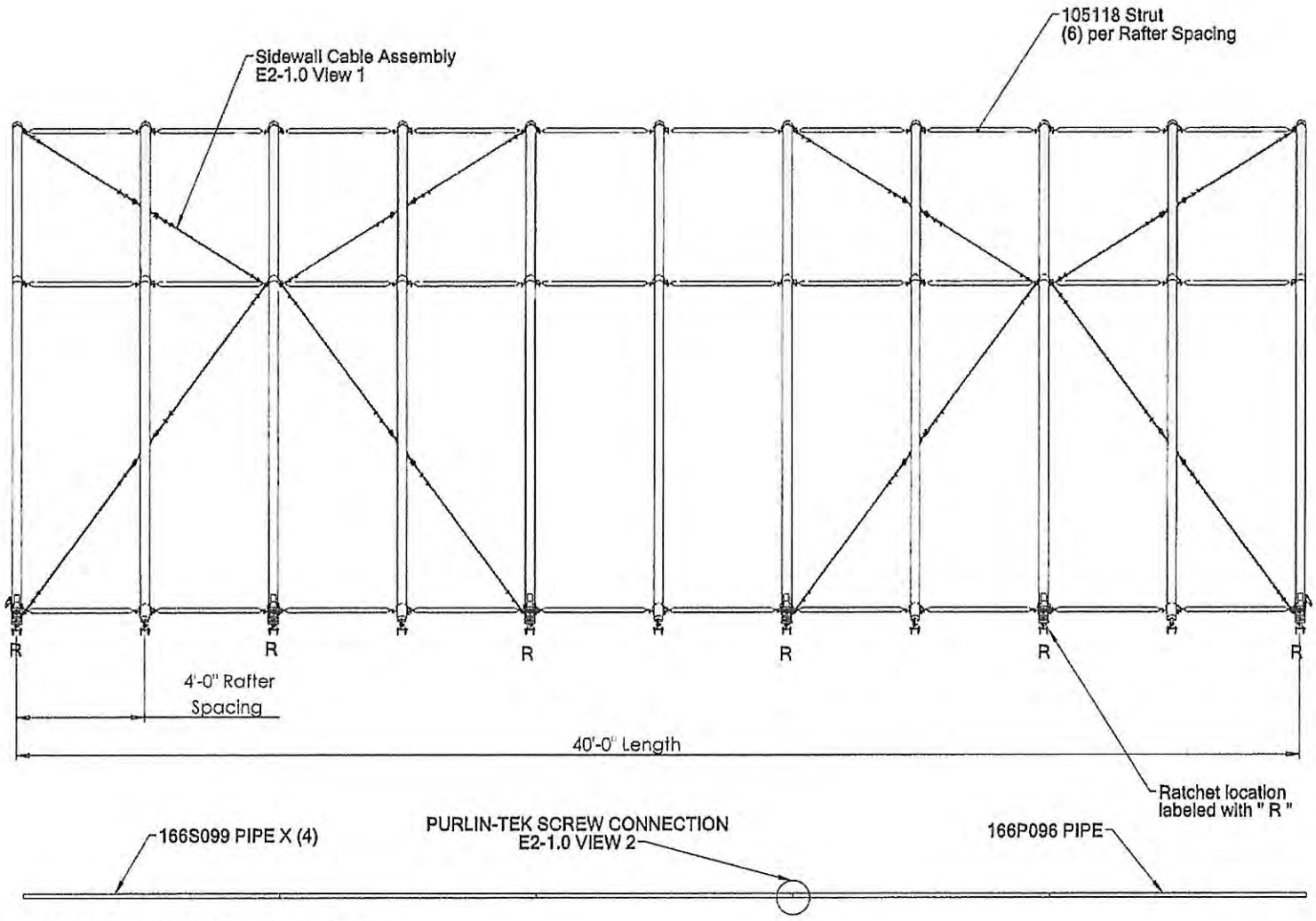

Drawn By	JR
Creation Date	2/6/2006
Last Revision Date	2/10/2006
Shelter Sku Number	PB00260R4
Shelter Dimensions	38'W x 15'H x 40'L
Shelter Description	Freestanding Building

Engineering Services & Products Co.

Design Approval

Manager Approval

Engineering Approval

C1-1.0

CONNECTIONS

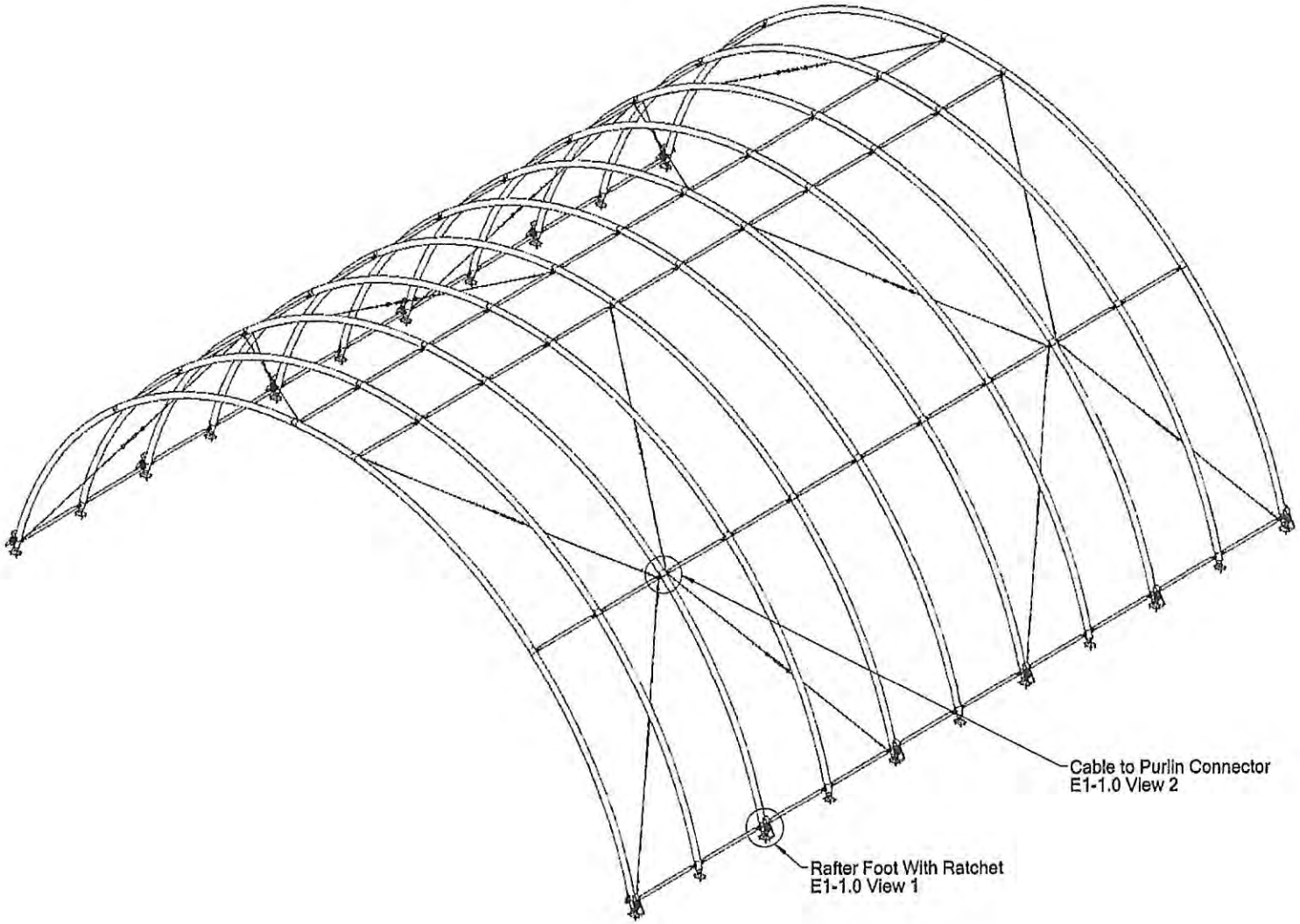

Drawn By	JR
Creation Date	2/6/2006
Last Revision Date	2/10/2006
Shelter Sku Number	PB00260R4
Shelter Dimensions	38'W x 15'H x 40'L
Shelter Description	Freestanding Building

ClearSpan Engineering Services & Products Co.

Design Approval

Manger Approval

Engineering Approval

D1-1.0

CONNECTION - DETAILS

NOTE: PURLIN CONNECTOR
AND STRUT REMOVED
FOR CLARITY

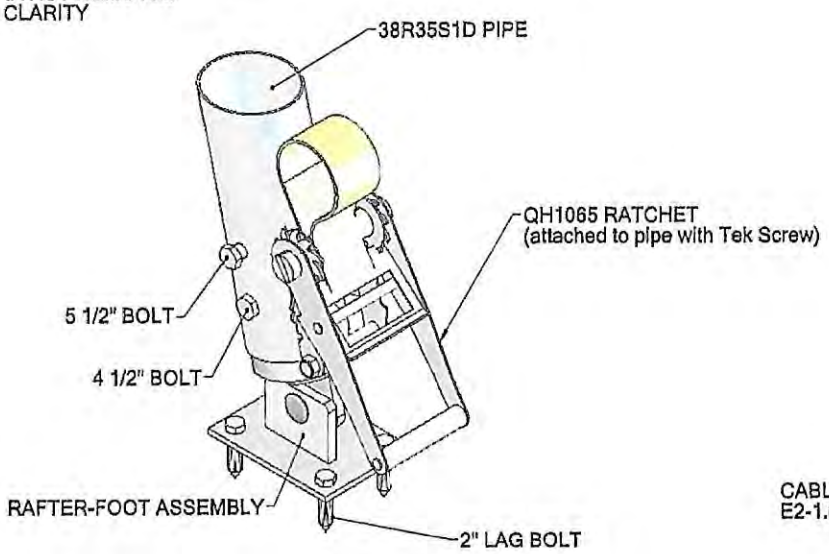

VIEW 1
RAFTER FOOT ASSEMBLY

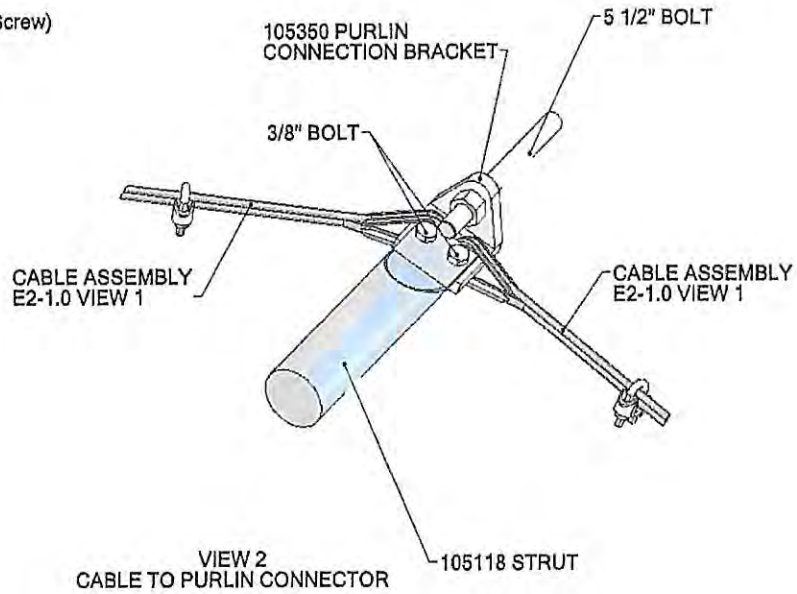

VIEW 2
CABLE TO PURLIN CONNECTOR

Drawn By	JR
Creation Date	2/6/2006
Last Revision Date	2/10/2006
Shelter Sku Number	PB00260R4
Shelter Dimensions	38'W x 15'H x 40'L
Shelter Description	Freestanding Building
	Engineering Services & Products Co.
Design Approval	
Manger Approval	
Engineering Approval	

E1-1.0

MAIN COVER DETAILS

Cover Description- QC00260R5NL

Drawn By	JR
Creation Date	2/6/2006
Last Revision Date	2/10/2006
Shelter Sku Number	PB00260R4
Shelter Dimensions	38'W x 15'H x 40'L
Shelter Description	Freestanding Building

Engineering Services & Products Co.

Design Approval

Manger Approval

Engineering Approval

H1-1.0

ClearSpan™
38' Wide Pony Wall Building

Photo may show a model of a different length.

STK#	DIMENSIONS
PB00250R4/R5	38' W x 19' H x 40' L
PB00252R4/R5	38' W x 19' H x 60' L
PB00254R4/R5	38' W x 19' H x 80' L
PB00256R4/R5	38' W x 19' H x 100' L

©2009 ClearSpan™
All Rights Reserved. Reproduction
is prohibited without permission.

Revision date: 09.11.09

ClearSpan™ Pony Wall Building

OVERVIEW

This section describes assembling your pony wall building. For details of each assembly procedure, consult the Quick Start Guide and the individual sections of these instructions. See illustration below to identify main parts of shelter.

1. Layout the site and identify the required parts for each assembly procedure.
2. Assemble all rafters.
3. Assemble and anchor the frame.
4. Cut, assemble, and install all cables.
5. Prepare and install the main cover.

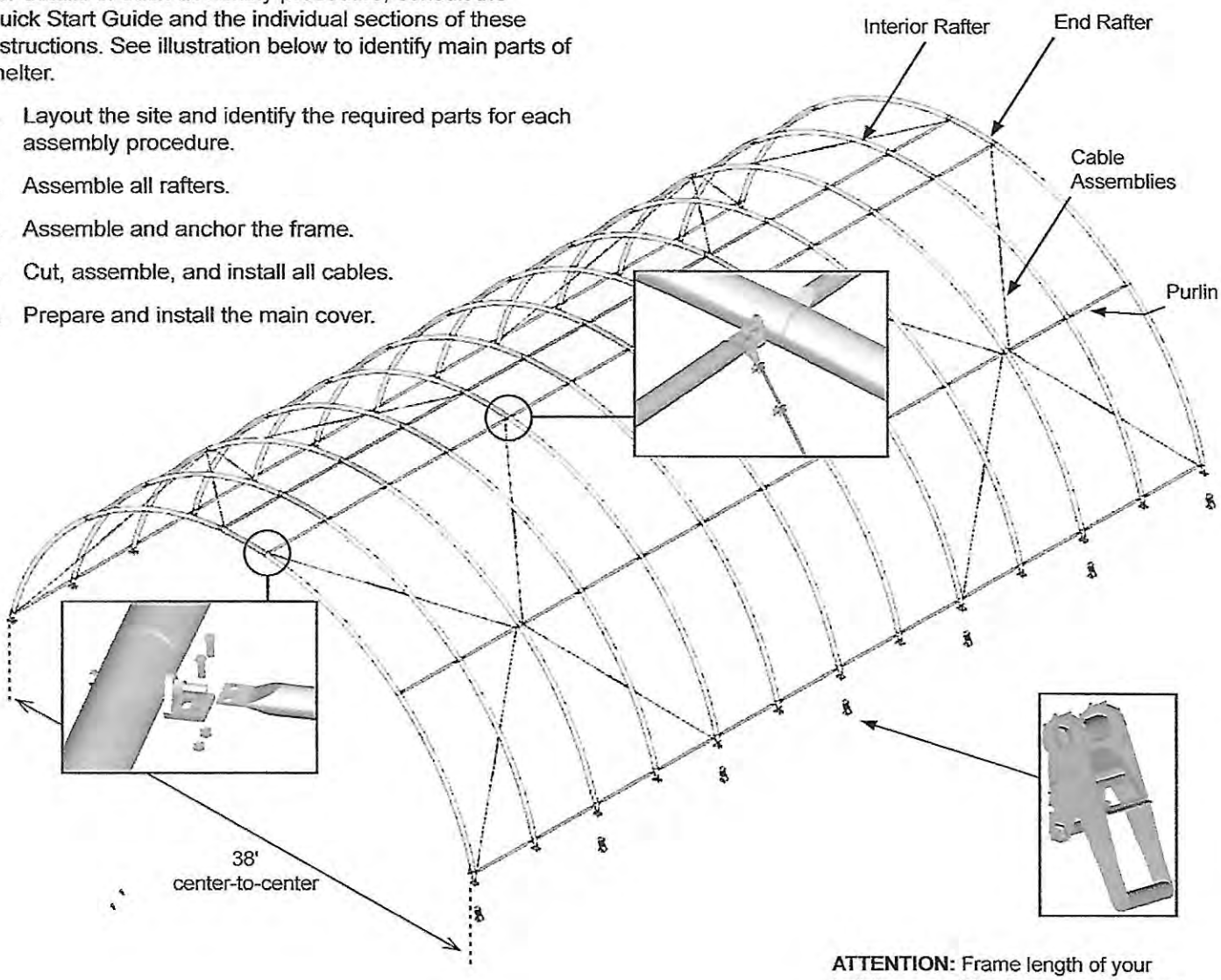

ATTENTION: Frame length of your building may differ from what is shown.

ATTACH MAIN COVER

Gather the parts:

- Main cover (with conduits inserted)
- Ropes (provided by customer) or strap long enough to reach over the frame
- Box cutter or utility knife

WARNING: *To prevent damage and injury, do not leave the cover unattended if it has not been properly secured.* The ropes can be used to temporarily keep the cover from blowing off the frame.

Assembly Procedure

1. To pull the cover over the frame, attach ropes or straps to both ends of the cover conduit positioned *farthest from the frame*. Wrap the rope around the conduit a few times to prevent it from slipping off.

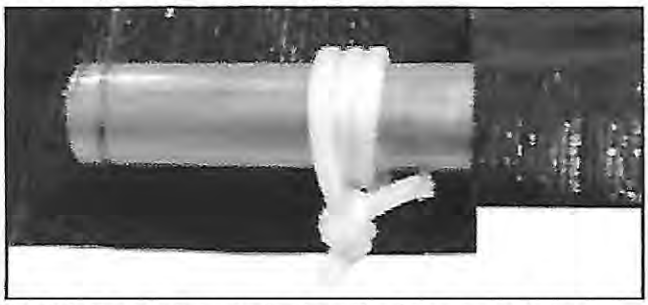

NOTE: Depending on the length of the cover it may be necessary to attach additional ropes to the cover conduit between the end ropes by cutting a small opening in the cover pocket and tying the rope around the conduit. DO NOT cut through the main cover. *Cut through the conduit pocket only.*

2. With all ropes attached to the cover conduit, toss the ropes over the frame, and pull the cover into position. Position one person at each rope. *Verify that the cover pockets are to the inside of the building. This will be the underside of the cover when it is pulled into position on the frame.*

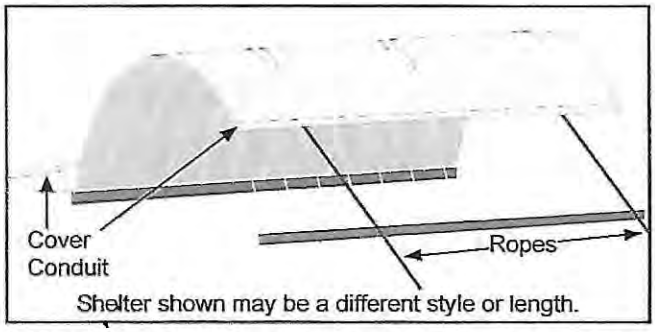

NOTE: Use lifts and additional assistants (if needed) to help pull the cover up and over the frame.

3. Once the main cover is pulled into position, center the cover on the frame (end-to-end and side-to-side).

WARNING: *To prevent damage and injury, do not leave the cover unattended if it has not been properly secured.*

4. Locate the straps at the front and rear hems and feed the straps through the center slot in each end ratchet. Operate the ratchet to wrap the strap onto the center hub just enough to keep the strap secure.

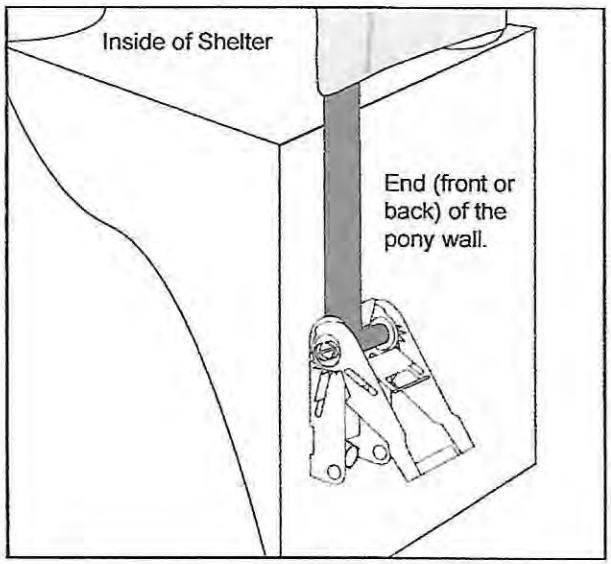

NOTE: Do not tighten completely at this time. This helps to temporarily secure the cover.

5. Tie the ropes (or straps), used to pull the cover into position, to the frame to help hold the cover.
6. Move to the other side conduit of the cover and temporarily secure that side of the cover to the frame.

   NOTE: Tie short pieces of rope to the ends of the side conduit and directly across from the ropes or straps tied to the other side conduit to temporarily secure the cover to the frame. Once side straps are installed and slightly tightened, the temporary ropes can be removed.

7. Continue with the installation of the side straps.