Boxborough Town Center Project
Exterior Lighting Schedule
April 21, 2017

STREET LIGHTS – PENN 16-86629
Locations per landscaping plan

UNIT LIGHTING – Fixtures are 100 W – 1200 Lumen each
Outdoor Front (at garage) Progress P5831-31
Outdoor Side (front door) Progress P5846-31
Outdoor Rear (rear door/deck) Progress P5604-31

CLUBHOUSE EXTERIOR LIGHTING - Fixtures are 100 W – 1200 Lumen each
Outdoor Front (quantity 2) and Rear (quantity 3) - Progress P-6011-31

Erreur ! Référence de lien hypertexte non

Erreur ! Référence de lien hypertexte non

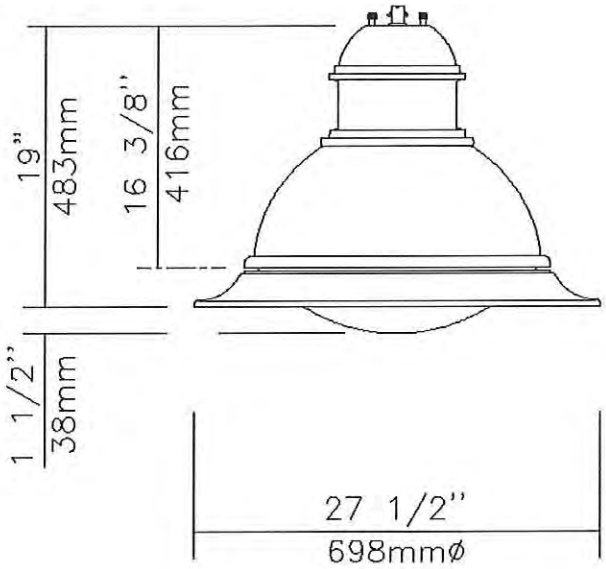

EPA: 1.42 sq ft / weight: 42 lb (19.1 kg)
Note: 3D image may not represent color or option selected.
Logos above include link, click to access.

Qty	6	Luminaire	**DMS50-55W32LED4K-R-LE3S-VOLT-BKTX**

Description of Components:

Hood: A die cast A360.1 aluminum dome complete with a cast-in technical ring with latch and hinge. The mechanism shall offer tool-free access to the inside of the luminaire. An embedded memory-retentive gasket shall ensure weatherproofing.

Housing: In a round shape, this housing is made of cast 356 aluminum, c/w a watertight grommet, mechanically assembled to the bracket with four bolts 3/8-16 UNC. This suspension system permits for a full rotation of the luminaire in 90 degree increments.

Light Engine: LEDgine composed of 5 main components: **Heat Sink / Lens / LED Module / Optical System / Driver**
Electrical components are RoHS compliant.

Heat Sink: Heat Sink: Made of die cast A360 aluminum optimising the LEDs efficiency and life, complete with a cast in skirt and technical ring. Product does not use any cooling device with moving parts (only passive cooling device)

Lens: Made of soda-lime clear tempered glass curved lens, mechanically assembled and sealed onto the lower part of the heat sink.

LED Module: LED type Philips Lumileds LUXEON R. Composed of 32 high-performance white LEDs. Color temperature as per ANSI/NEMA bin Neutral White, 4000 Kelvin nominal (3985K +/- 275K or 3710K to 4260K), CRI 70 Min. 75 Typical.

Optical System: (LE3S), IES type III (asymmetrical). Composed of high-performance optical grade PMMA acrylic refractor lenses to achieve desired distribution optimized to get maximum spacing, target lumens and a superior lighting uniformity. Optical system is rated IP66. Performance shall be tested per LM-63, LM-79 and TM-15 (IESNA) certifying its photometric performance. Street side indicated.

PHILIPS
LUMEC

Driver: High power factor of 90% minimum. Electronic driver, operating range 50/60 Hz. **Auto-adjusting universal voltage input from 120 to 277 VAC rated for both application line to line or line to neutral, Class I**, THD of 20% max. Maximum ambient operating temperature from -40F(-40C) to 130F(55C) degrees.

The current supplying the LEDs will be reduced by the driver if the driver experiences internal overheating as a protection to the LEDs and the electrical components. Output is protected from short circuits, voltage overload and current overload. Automatic recovery after correction. Standard built-in driver surge protection of 2.5kV (min).

Surge Protector: Surge protector tested in accordance with ANSI/IEEE C62.45 per ANSI/IEEE C62.41.2 Scenario I Category C High Exposure 10kV/10kA waveforms for Line-Ground, Line-Neutral and Neutral-Ground, and in accordance with U.S. DOE (Department of Energy) MSSLC (Municipal Solid-State Street Lighting Consortium) model specification for LED roadway luminaires electrical immunity requirements for High Test Level 10kV / 10kA.

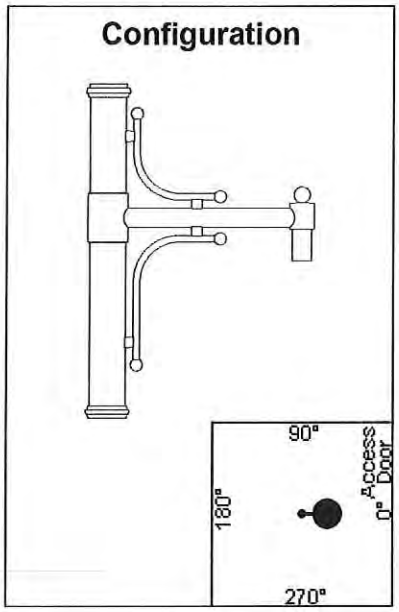

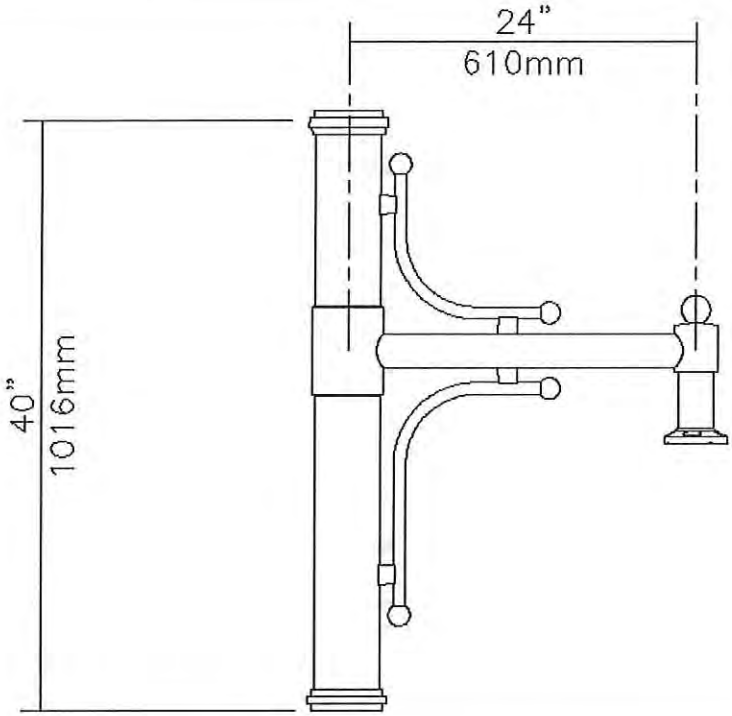

Qty	**6**	Bracket	**MM-1A-R4-BKTX**

Description of Components:

Arm: Made from 2 3/8in. (60mm) outside diameter aluminum tubing, welded.

Decorative Element: Made of cast 356 aluminum, welded.

Central Adaptor: Made of aluminum 6061-T6, 4 1/2" (114mm) outside diameter. Complete with a cast 356 aluminum fitter that **slip-fits 9" (229mm) over a 4" (102mm) outside diameter pole tenon.** Mechanically assembled using two sets of four set screws at 90 degrees around the bracket.

Bracket Weight: 22 lbs (10 kg)

PHILIPS LUMEC

Base & Bolts Information

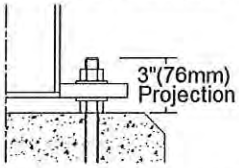

Comes with 4 steel anchor bolts, 3/4" X 17" + 3" J Type Bolts, 8 nuts and 8 washers. Important: Do not obstruct space between anchor plate and concrete base.

Anchor Plate

-Bolt Circle:
10 1/2" (267mm)

- Material:
Cast Aluminum

- NOTE:
Bolt Circle Allowed:
9" to 11"
229mm to 279mm

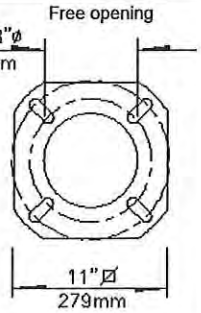

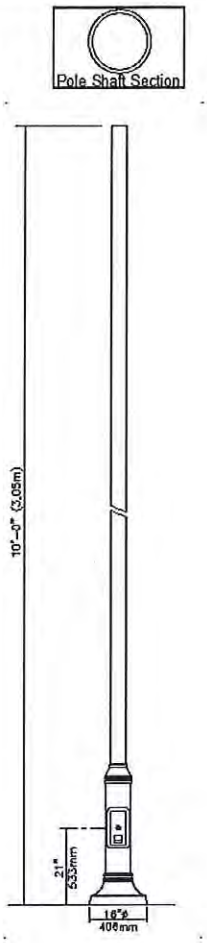

Qty	**6**	Pole	**AM6U-10-BKTX**

Description of Components:

Pole Shaft: Shall be made from a 4" (102mm) round extruded 6061-T6 aluminum tubing, having a 0.226" (5.7mm) wall thickness, welded to the pole base.

Joint Cover: Two-piece round joint cover made from cast 356 aluminum, mechanically fastened with stainless steel screws.

Pole Base: Shall be made from a 6 5/8" (168mm) round extruded 6061-T6 aluminum tubing base having a 0.135" (3.4mm) wall thickness, welded to both the bottom and top of the anchor plate.

Maintenance Opening: The pole shall have a 4 1/2" x 10" (114mm x 254mm) maintenance opening centered 21" (533mm) from the bottom of the anchor plate, complete with a weatherproof embossed aluminum cover and a copper ground lug.

Base Cover: Two piece round base cover made from cast 356 aluminum, mechanically fastened with stainless steel screws.

Note: A tenon will be provided when the luminaire or bracket does not fit directly on pole shaft. Tenon not shown on the drawing.

IMPORTANT: Philips Lumec strongly recommends the installation of the complete lighting assembly with all of its accessories upon the anchoring of the pole. This will ensure that the structural integrity of the product is maintained throughout its lifetime.

Pole Weight: 30 lbs (13.6 kg)

PHILIPS LUMEC

Miscellaneous

Description of Components:

Wiring: Gauge (#14) TEW/AWM 1015 or 1230 wires, 6" (152mm) minimum exceeding top of the bracket.

Hardware: All exposed screws shall be complete with Ceramic primer-seal basecoat to reduce seizing of the parts and offers a high resistance to corrosion. All seals and sealing devices are made and/or lined with EPDM and/or silicone and/or rubber.

Finish: Color to be **black textured RAL9005TX (BKTX)** and in accordance with the AAMA 2603 standard. Application of polyester powder coat paint (4 mils/100 microns) with ± 1 mils/24 microns of tolerance. The Thermosetting resins provides a discoloration resistant finish in accordance with the ASTM D2244 standard, as well as luster retention in keeping with the ASTM D523 standard and humidity proof in accordance with the ASTM D2247 standard.

The surface treatment achieves a minimum of 2000 hours for salt spray resistant finish in accordance with testing performed and per ASTM B117 standard.

Note: ***IMPORTANT: All missing details must be clearly specified on the return of these approval drawings. Thank you for your cooperation.***

VOLTAGE:_____

Pole Information: (R4), Bracket to be mounted on top of a 4" (102mm) outside diameter round pole or tenon.

LED products manufacturing standard: The electronic components sensitive to electrostatic discharge (ESD) such as light emitting diodes (LEDs) are assembled in compliance with IEC61340-5-1 and ANSI/ESD S20.20 standards so as to eliminate ESD events that could decrease the useful life of the product.

Quality Control: The manufacturer must provide a written confirmation of its ISO 9001-2008 and ISO 14001-2004 International Quality Standards Certification.

Vibration Resistance: The DMS50 meets the **ANSI C136.31**, American National Standard for Roadway Luminaire Vibration specifications for Bridge/overpass applications. (Tested for 3G over 100 000 cycles by an independent lab)

Aluminum poles are not recommended in high vibration environments such as bridge, overpass, top of building, airport, train station, etc.

Web site information details: Click on any specific information details you need:

Erreur ! Référence de lien hypertexte non valide. / Erreur ! Référence de lien hypertexte non valide. / Erreur ! Référence de lien hypertexte non valide. / Erreur ! Référence de lien hypertexte non valide. / Erreur ! Référence de lien hypertexte non valide. / Erreur ! Référence de lien hypertexte non valide.

PHILIPS LUMEC

LED light engine technical information for DMS50 DMS55 RN20 RN30 with sag lens

LED = Philips Lumileds Luxeon R, CRI = 70, CCT = 4000K (+/- 350K)

System (LED + driver) rated life = 100,000 hrs [1]

Lamp	Typical delivered lumens	Typical system wattage [2] (W)	Typical current @ 120 V (A)	Typical current @ 208 V (A)	Typical current @ 240 V (A)	Typical current @ 277 V (A)	LED current (mA)	HID equivalent [3]	Luminaire Efficacy Rating (Lm/W)	BUG rating
35W32LED4K-R-LE2S	2867	35	0.29	0.17	0.16	0.15	350	70 -100	81.9	B1-U1-G1
35W32LED4K-R-LE3S	3972	35	0.29	0.17	0.16	0.15	350	70 -100	113.5	B1-U1-G1
35W32LED4K-R-LE4S	3691	35	0.29	0.17	0.16	0.15	350	70 -100	105.5	B1-U1-G1
35W32LED4K-R-LE5S	3649	35	0.29	0.17	0.16	0.15	350	70 -100	104.2	B2-U1-G1
55W32LED4K-R-LE2S	5232	52	0.40	0.23	0.21	0.19	530	100 - 150	100.6	B1-U1-G1
55W32LED4K-R-LE3S	5553	52	0.40	0.23	0.21	0.19	530	100 - 150	106.8	B2-U1-G1
55W32LED4K-R-LE4S	5160	52	0.40	0.23	0.21	0.19	530	100 - 150	99.2	B1-U1-G1
55W32LED4K-R-LE5S	5101	52	0.40	0.23	0.21	0.19	530	100 - 150	98.1	B3-U1-G1
55W48LED4K-R-LE2S	5395	55	0.38	0.22	0.23	0.21	350	100 - 150	98.1	B1-U1-G1
55W48LED4K-R-LE3S	5726	55	0.38	0.22	0.23	0.21	350	100 - 150	104.1	B2-U1-G1
55W48LED4K-R-LE4S	5320	55	0.38	0.22	0.23	0.21	350	100 - 150	96.7	B1-U1-G2
55W48LED4K-R-LE5S	5259	55	0.38	0.22	0.23	0.21	350	100 - 150	95.6	B3-U1-G1
80W48LED4K-R-LE2S	5259	79	0.63	0.36	0.34	0.31	530	150 - 175	66.6	B3-U1-G2
80W48LED4K-R-LE3S	8051	79	0.63	0.36	0.34	0.31	530	150 - 175	101.9	B2-U1-G2
80W48LED4K-R-LE4S	7481	79	0.63	0.36	0.34	0.31	530	150 - 175	94.7	B2-U1-G2
80W48LED4K-R-LE5S	7395	79	0.63	0.36	0.34	0.31	530	150 - 175	93.6	B3-U1-G2
70W64LED4K-R-LE2S	7611	71	0.58	0.34	0.32	0.3	350	100 - 150	107.2	B2-U1-G1
70W64LED4K-R-LE3S	8077	71	0.58	0.34	0.32	0.3	350	100 - 150	113.8	B2-U1-G2
70W64LED4K-R-LE4S	7505	71	0.58	0.34	0.32	0.3	350	100 - 150	105.7	B2-U1-G2
70W64LED4K-R-LE5S	7419	71	0.58	0.34	0.32	0.3	350	100 - 150	104.5	B3-U1-G2
110W64LED4K-R-LE2S	7419	103	0.8	0.46	0.42	0.38	530	175 - 200	72.0	B2-U1-G2
110W64LED4K-R-LE3S	11412	103	0.8	0.46	0.42	0.38	530	175 - 200	110.8	B3-U1-G2
110W64LED4K-R-LE4S	10604	103	0.8	0.46	0.42	0.38	530	175 - 200	103.0	B2-U1-G2
110W64LED4K-R-LE5S	10482	103	0.8	0.46	0.42	0.38	530	175 - 200	101.8	B4-U1-G2
90W80LED4K-R-LE2S	9325	87	0.78	0.43	0.40	0.34	350	150 - 175	107.2	B2-U1-G2
90W80LED4K-R-LE3S	9897	87	0.78	0.43	0.40	0.34	350	150 - 175	113.8	B3-U1-G2
90W80LED4K-R-LE4S	9197	87	0.78	0.43	0.40	0.34	350	150 - 175	105.7	B2-U1-G2
90W80LED4K-R-LE5S	9091	87	0.78	0.43	0.40	0.34	350	150 - 175	104.5	B3-U1-G2
135W80LED4K-R-LE2S	13122	129	1.15	0.61	0.58	0.5	530	250 - 320	101.7	B3-U1-G2
135W80LED4K-R-LE3S	13927	129	1.15	0.61	0.58	0.5	530	250 - 320	108.0	B3-U1-G3
135W80LED4K-R-LE4S	12941	129	1.15	0.61	0.58	0.5	530	250 - 320	100.3	B3-U2-G2
135W80LED4K-R-LE5S	12792	129	1.15	0.61	0.58	0.5	530	250 - 320	99.2	B4-U2-G2

[1] L70 = 100,000 hrs (at ambient temperature = 25°C

[2] System wattage includes the lamp and the LED driver.

[3] Equivalence should always be confirmed by a photometric layout

Note : Due to rapid and continuous advances in LED technology, LED luminaire data is subject to change without notice and at the discretion of Philips.

PHILIPS LUMEC

DATE: TYPE:

NAME:

PROJECT:

Incandescent

P5831-31

BrassGUARD Lantern

Solid brass hexagonal wall torch with clear beveled glass panels.

Category: Outdoor
Finish: Black (painted)
Construction: Solid brass construction
Glass: Clear beveled glass panels

Width: 7"
Height: 28-1/2"
Depth: 7-7/16"
H/CTR: 15-5/8"

Glass: 3-1/4" W.
Height: 6-7/8"

MOUNTING	ELECTRICAL	LAMPING	ADDITIONAL INFORMATION
Wall mounted Mounting strap for outlet box included Back plate covers a standard 4" hexagonal recessed outlet box 4-11/16" W., 5-1/2"	6" of wire supplied 120V	Quantity: 1 100W Medium Base Medium porcelain socket	UL-CUL Wet location listed 1 year warranty Companion Chain hung lantern, Close-to-ceiling, Post top lantern, Wall lantern fixtures are available

DATE: TYPE:

NAME:

PROJECT:

Incandescent

P5846-31

BrassGUARD Lantern

Hexagonal aluminum wall torch with clear beveled glass panels.

Category: Outdoor
Finish: Black (painted)
Construction: Aluminum construction
Glass: Clear beveled glass panels

Width: 5-1/4"
Height: 14-11/16"
Depth: 5-15/16"
H/CTR: 8-3/8"

Glass: 4-3/4" W.
Height: 2-3/4"

MOUNTING	ELECTRICAL	LAMPING	ADDITIONAL INFORMATION
Wall mounted Mounting strap for outlet box included Back plate covers a standard 4" hexagonal recessed outlet box	Pre-wired 6" of wire supplied 120V	Quantity: 1 60W Medium Base Medium ceramic socket	UL-CUL Wet location listed 1 year warranty Companion Chain hung lantern, Close-to-ceiling, Post top lantern, Wall lantern fixtures are available

DATE: TYPE:

NAME:

PROJECT:

Incandescent

P5604-31

Utility Lantern

Powder-coated finish. White 6 inch glass globe.

Category: Outdoor
Finish: Black (powdercoat)
Construction:
Glass: White glass

Width: 6"
Height: 8-1/2"
Depth: 6-1/2"
H/CTR: 2-1/4"

MOUNTING	ELECTRICAL	LAMPING	ADDITIONAL INFORMATION
Wall mounted 4-1/2" dia.	Pre-wired 6" of wire supplied 120V	Quantity: 1 100W Medium Base Medium porcelain socket	UL-CUL Wet location listed 1 year warranty Companion fixtures are available

DATE: TYPE:

NAME:

PROJECT:

Compact fluorescent

P6011-31

Via

Via is a strikingly modern, energy efficient, outdoor lantern with nautical overtones. A durable powder coat finish is paired with a tubular etched opal glass shade. One-light medium wall lantern.

Width: 9-3/4"
Height: 14"
Depth: 10-1/2"
H/CTR: 10-7/8"

Category: Outdoor

Finish: Black (powdercoat)

Construction:

Glass: Etched opal glass cylindrical diffuser

MOUNTING	ELECTRICAL	LAMPING	ADDITIONAL INFORMATION
Wall mounted Mounting strap for outlet box included Back plate covers a standard 4" hexagonal recessed outlet box	Pre-wired 6" of wire supplied 120V	Quantity: 1 26W GU-24 GU24 plastic socket	cCSAus Wet location listed 1 year warranty Companion Chain hung lantern, Post top lantern, Wall lantern fixtures are available